VOLUME NO. 2

ARMY TM 9-2320-280-24P-2
AIR FORCE TO 36A12-1A-3044-2
MARINE CORPS TM 2320-24P/8B
(SUPERSEDES TM 9-2320-280-24P-2, 31 January 1996)

TECHNICAL MANUAL

UNIT, DIRECT SUPPORT AND GENERAL SUPPORT MAINTENANCE REPAIR PARTS AND SPECIAL TOOLS LIST

FOR

TRUCK, UTILITY: CARGO/TROOP CARRIER, 1-1/4 TON, 4X4, M998 (2320-01-107-7155) (EIC: BBD); M998A1 (2320-01-371-9577) (EIC: BBN);

TRUCK, UTILITY: CARGO/TROOP CARRIER, 1-1/4 TON, 4X4, W/WINCH, M1038 (2320-01-107-7156) (EIC: BBE); M1038A1 (2320-01-371-9578) (EIC: BBP);

TRUCK, UTILITY: HEAVY VARIANT, 4X4, M1097 (2320-01-346-9317) (EIC: BBM); M1097A1 (2320-01-371-9583) (EIC: BBU); M1097A2 (2320-01-380-8604) (EIC: BB6); M1123 (2320-01-455-9593) (EIC: B6G);

TRUCK, UTILITY: TOW CARRIER, ARMORED, 1-1/4 TON, 4X4, M966 (2320-01-107-7153) (EIC: BBC); M966A1 (2320-01-372-3932) (EIC: BBX); M1121 (2320-01-456-1282) (EIC: B6H);

TRUCK, UTILITY: TOW CARRIER, W/SUPPLEMENTAL ARMOR, 1-1/4 TON, 4X4, M1045 (2320-01-146-7191); M1045A1 (2320-01-371-9580) (EIC: BBR); M1045A2 (2320-01-380-8229) (EIC: BB5);

TRUCK, UTILITY: TOW CARRIER, W/SUPPLEMENTAL ARMOR, 1-1/4 TON, 4X4, W/WINCH, M1046 (2320-01-146-7188); M1046A1 (2320-01-371-9582) (EIC: BBT);

TRUCK, UTILITY: ARMAMENT CARRIER, ARMORED, 1-1/4 TON, 4X4, M1025 (2320-01-128-9551) (EIC: BBF); M1025A1 (2320-01-371-9584) (EIC: BBV); M1025A2 (2320-01-380-8233) (EIC: BB3);

TRUCK, UTILITY: ARMAMENT CARRIER, ARMORED, 1-1/4 TON, 4X4, W/WINCH, M1026 (2320-01-128-9552) (EIC: BBG); M1026A1 (2320-01-371-9579) (EIC: BBQ);

TRUCK, UTILITY: ARMAMENT CARRIER, W/SUPPLEMENTAL ARMOR, 1-1/4 TON, 4X4, M1043 (2320-01-146-7190); M1043A1 (2320-01-372-3933) (EIC: BBY); M1043A2 (2320-01-380-8213) (EIC: BB4);

TRUCK, UTILITY: ARMAMENT CARRIER, W/SUPPLEMENTAL ARMOR, 1-1/4 TON, 4X4, W/WINCH, M1044 (2320-01-146-7189); M1044A1 (2320-01-371-9581) (EIC: BBS);

TRUCK, UTILITY: S250 SHELTER CARRIER, 4X4, M1037 (2320-01-146-7193) (EIC: BBK);

TRUCK, UTILITY: S250 SHELTER CARRIER, 4X4, W/WINCH, M1042 (2320-01-146-7187);

TRUCK, AMBULANCE, 2-LITTER, ARMORED, 4X4, M996 (2310-01-111-2275) (EIC: BBB); M996A1 (2310-01-372-3935) (EIC: BB2);

TRUCK, AMBULANCE, 4-LITTER, ARMORED, 4X4, M997 (2310-01-111-2274) (EIC: BBA); M997A1 (2310-01-372-3934) (EIC: BBZ); M997A2 (2310-01-380-8225) (EIC: BB8);

TRUCK, AMBULANCE, 2-LITTER, SOFT TOP, 4X4, M1035 (2310-01-146-7194); M1035A1 (2310-01-371-9585) (EIC: BBW); M1035A2 (2310-01-380-8290) (EIC: BB9).

Approved for public release; distribution is unlimited.

HEADQUARTERS, DEPARTMENTS OF THE ARMY, THE AIR FORCE, AND MARINE CORPS

MARCH 2001

ARMY TM 9-2320-280-24P-2
AIR FORCE TO 36A12-1A-3044-2
MARINE CORPS TM 2320-24P/8B

CHANGE

NO. 1

HEADQUARTERS, DEPARTMENTS
OF THE ARMY, THE
AIR FORCE, AND MARINE CORPS

WASHINGTON, D.C., 15 July 2004

TECHNICAL MANUAL

VOLUME 2 OF 2
UNIT, DIRECT SUPPORT AND GENERAL SUPPORT MAINTENANCE
REPAIR PARTS AND SPECIAL TOOLS LIST
FOR

TRUCK, UTILITY: CARGO/TROOP CARRIER, 1-1/4 TON, 4X4, M998 (2320-01-107-7155) (EIC: BBD); M998A1 (2320-01-371-9577) (EIC: BBN);

TRUCK, UTILITY: CARGO/TROOP CARRIER, 1-1/4 TON, 4X4, W/WINCH, M1038 (2320-01-107-7156) (EIC: BBE); M1038A1 (2320-01-371-9578) (EIC: BBP);

TRUCK, UTILITY: HEAVY VARIANT, 4X4, M1097 (2320-01-346-9317) (EIC: BBM); M1097A1 (2320-01-371-9583) (EIC: BBU); M1097A2 (2320-01-380-8604) (EIC: BB6); M1123 (2320-01-455-9593) (EIC: B6G);

TRUCK, UTILITY: TOW CARRIER, ARMORED, 1-1/4 TON, 4X4, M966 (2320-01-107-7153) (EIC: BBC); M966A1 (2320-01-372-3932) (EIC: BBX); M1121 (2320-01-456-1282) (EIC: B6H);

TRUCK, UTILITY: TOW CARRIER, W/SUPPLEMENTAL ARMOR, 1-1/4 TON, 4X4, M1045 (2320-01-146-7191); M1045A1 (2320-01-371-9580) (EIC: BBR); M1045A2 (2320-01-380-8229) (EIC: BB5);

TRUCK, UTILITY: TOW CARRIER, W/SUPPLEMENTAL ARMOR, 1-1/4 TON, 4X4, W/WINCH, M1046 (2320-01-146-7188); M1046A1 (2320-01-371-9582) (EIC: BBT);

TRUCK, UTILITY: ARMAMENT CARRIER, ARMORED, 1-1/4 TON, 4X4, M1025 (2320-01-128-9551) (EIC: BBF); M1025A1 (2320-01-371-9584) (EIC: BBV); M1025A2 (2320-01-380-8233) (EIC: BB3);

TRUCK, UTILITY: ARMAMENT CARRIER, ARMORED, 1-1/4 TON, 4X4, W/WINCH, M1026 (2320-01-128-9552) (EIC: BBG); M1026A1 (2320-01-371-9579) (EIC: BBQ);

TRUCK, UTILITY: ARMAMENT CARRIER, W/SUPPLEMENTAL ARMOR, 1-1/4 TON, 4X4, M1043 (2320-01-146-7190); M1043A1 (2320-01-372-3933) (EIC: BBY); M1043A2 (2320-01-380-8213) (EIC: BB4);

TRUCK, UTILITY: ARMAMENT CARRIER, W/SUPPLEMENTAL ARMOR, 1-1/4 TON, 4X4, W/WINCH, M1044 (2320-01-146-7189); M1044A1 (2320-01-371-9581) (EIC: BBS);

TRUCK, UTILITY: S250 SHELTER CARRIER, 4X4, M1037 (2320-01-146-7193) (EIC: BBK);

TRUCK, UTILITY: S250 SHELTER CARRIER, 4X4, W/WINCH, M1042 (2320-01-146-7187);

TRUCK, AMBULANCE, 2-LITTER, ARMORED, 4X4, M996 (2310-01-111-2275) (EIC: BBB); M996A1 (2310-01-372-3935) (EIC: BB2);

TRUCK, AMBULANCE, 4-LITTER, ARMORED, 4X4, M997 (2310-01-111-2274) (EIC: BBA); M997A1 (2310-01-372-3934) (EIC: BBZ); M997A2 (2310-01-380-8225) (EIC: BB8);

TRUCK, AMBULANCE, 2-LITTER, SOFT TOP, 4X4, M1035 (2310-01-146-7194); M1035A1 (2310-01-371-9585) (EIC: BBW); M1035A2 (2310-01-380-8290) (EIC: BB9).

TM 9-2320-280-24P-2, 30 March 2001, is changed as follows:

1. Remove old pages and insert new pages as indicated below.

2. New or changed material is indicated by a vertical bar in the margin of the page and an asterisk (*) next to changed item number.

Approved for public release; distribution is unlimited

Remove pages	Insert pages	Remove pages	Insert pages
A/(B Blank)	A and B	418-1 through Figure 424	418-1 through Figure 424
i through 329-2	i through 329-2	428-1 and 428-2	428-1 and 428-2
330-1 and Figure 331	330-1 and Figure 331	429-1 and 429-2	429-1 and 429-2
331-3 and 331-4	331-3 and 331-4	430-1 and 430-2	430-1 and 430-2
Figure 333 through Figure 335	Figure 333 through Figure 335	432-1 and Figure 433	432-1 and Figure 433
Figure 338 through 338-2	Figure 338 through 338-2	Figure 438 through 438-2	Figure 438 through 438-2
339-1 and 339-2	339-1 and 339-2	439-1 and 439-2	439-1 and 439-2
342-1 and Figure 343	342-1 and Figure 343	440-1 and 440-2	440-1 and 440-2
347-1 through 348-2	347-1 through 348-2	441-1 and 442-2	441-1 and 442-2
353-1 and Figure 354	353-1 and Figure 354	457-3 through Figure 458	457-3 through Figure 458
354-3 and 354-4	354-3 and 354-4	458-5 and Figure 459	458-5 and Figure 459
355-3 and Figure 356	355-3 and Figure 356	461-1 and 461-2	461-1 and 461-2
365-1 and 365-2	365-1 and 365-2	465-1 through Figure 468	465-1 through Figure 468
366-3 and 366-4	366-3 and 366-4	471-1 and 471-2	471-1 and 471-2
Figure 368	Figure 368	474-1 through 474-4	474-1 through 474-4
368-5 and Figure 369	368-5 through Figure 369	475-3 and 475-4	475-3 and 475-4
372-3 through Figure 373	372-3 through Figure 373	480-3 and 480-4	480-3 and 480-4
375-1 and 375-2	375-1 and 375-2	481-3 through 482-2	481-3 through 482-2
384-1 through Figure 386	384-1 through Figure 386	485-1 and 485-2	485-1 and 485-2
388-1 and Figure 389	388-1 and Figure 389	None	487A-1 through 487D-2
396-1 through Figure 398	396-1 through Figure 398	Figure 488 through Figure 489	Figure 488 through Figure 489
401-1 and 401-2	401-1 and 401-2	490-1 and Figure 491	490-1 through Figure 491
402-1 and 402-2	402-1 and 402-2	Kits-1 through Figure 500	Kits -1 through Figure 500
403-1 through 412-2	403-1 through 412-2	505-1 and 505-2	505-1 and 505-2
413-1 through 414-2	413-1 through 414-2	509-1 through Figure 511	509-1 through Figure 511
415-1 and 415-2	415-1 and 415-2	I-1 through I-314	I-1 through I-345
416-1 and 416-2	416-1 and 416-2	DA Form 2028-2	DA Form 2028
417-1 and 417-2	417-1 and 417-2		

3. File this change sheet in front of the publication for reference purposes.

By Order of the Secretary of the Army:

PETER J. SCHOOMAKER
General, United States Army
Chief of Staff

Official:

JOEL B. HUDSON
Administrative Assistant to the
Secretary of the Army

By Order of the Secretary of the Air Force:

RONALD R. FOGLEMAN
General, United States Air Force
Chief of Staff

Official:

HENRY VICCELLIO, JR.
General, United States Air Force
Commander, Air Force Materiel Command

Distribution:

To be distributed in accordance with the initial distribution number (IDN) 381008, requirements for TM 9-2320-280-24P-2.

LIST OF EFFECTIVE PAGES

Date of issue of volume 2 is:

Original . . . 0 . . . . .30 March 2001
Change . . . 1 . . 15 July 2004

TOTAL NUMBER OF PAGES IN VOLUME 2 IS 1023. CONSISTING OF THE FOLLOWING:

Page No. . . . . .*Change No.

VOLUME 2

A 1
B Added 1
i - vi 1
vii Added 1
Figure 329 0
329-1 - 329-2 1
Figure 330 - 330-1 0
Figure 331 1
331-1 - 331-3 0
331-4 1
Figure 332 - 332-2 0
Figure 333 - 333-1 1
333-2 Added 1
Figure 334 - 334-1 1
Figure 335 - 337-2 0
Figure 338 - 338-2 1
Figure 339 0
339-1 - 339-2 1
Figure 340 - Figure 342 0
342-1 1
Figure 343 - 347-1 0
Figure 348 - 348-2 1
Figure 349 - Figure 353 0
353-1 1
Figure 354 - 354-3 0
354-4 1
Figure 355 - 355-2 0
355-3 1
Figure 356 - 365-1 0
365-2 1
365-3 - 366-2 0
366-3 1
366-4 - 367-2 0
Figure 368 1
368-1 - 368-4 0
368-5 1
368-6 Added 1

Page No. . . . . .*Change No.

Figure 369 - 372-2 0
372-3 - 372-5 1
Figure 373 - Figure 375 0
375-1 1
375-2 - Figure 384 0
384-1 1
Figure 385 0
385-1 1
Figure 386 - Figure 388 0
388-1 1
Figure 389 - 396-1 0
Figure 397 1
397-1 0
397-2 - 397-6 1
Figure 397A - 397E-3 Added . .1
Figure 398 - Figure 401 0
401-1 1
401-2 - Figure 402 0
402-1 1
402-2 - Figure 403 0
403-1 1
403-2 0
Figure 404 - 408-5 Deleted . . .1
Figure 409 0
409-1 - 410-3 1
410-4 Added 1
Figure 411 0
411-1 1
411-2 Added 1
Figure 412 - 412-1 0
412-2 1
Figure 413 0
413-1 1
Figure 414 0
414-1 - 414-2 1
414-3 - Figure 415 0
415-1 1
415-2 - Figure 416 0

Page No. . . . . .*Change No.

416-1 - 416-2 1
416-3 - Figure 417 0
417-1 1
417-2 - Figure 418 0
418-1 1
Figure 419 0
419-1 1
Figure 420 0
420-1 1
Figure 421 0
421-1 1
Figure 422 0
422-1 1
Figure 423 0
423-1 1
Figure 424 - Figure 428 0
428-1 - 428-2 1
428-3 - Figure 429 0
429-1 1
429-2 - Figure 430 0
430-1 - 430-2 1
430-3 - Figure 432 0
432-1 1
Figure 433 - 437-2 0
Figure 438 - 438-2 1
Figure 439 0
439-1 - 439-2 1
Figure 440 0
440-1 1
440-2 - Figure 441 0
441-1 1
Figure 442 0
442-1 1
442-2 - 457-2 0
457-3 - 457-4 1
457-5 0
Figure 458 1
458-1 - 458-4 0

*Zero in this column indicates original page.

LIST OF EFFECTIVE PAGES (Contd)

Page No. . . . . .*Change No.

458-5 1
Figure 459 - Figure 461 0
461-1 1
461-2 - Figure 465 0
465-1 1
Figure 466 - 467-1 Deleted . . .1
Figure 468 - Figure 471 0
471-1 1
471-2 - Figure 474 0
474-1 - 474-3 1
474-4 - 475-3 0
475-4 1
Figure 476 - 480-2 0
480-3 1
480-4 - 481-3 0
Figure 482 1
482-1 0
482-2 1
Figure 483 - Figure 485 0
485-1 1
485-2 - 487-2 0
Figure 487A - 487D-2 Added . .1
Figure 488 - 488-1 1
488-2 Deleted 1
Figure 489 - Figure 490 0
490-1 1
Figure 490A - 490A-1 Added . .1
Figure 491 1
491-1 - 498-1 0
Kits-1 0
Kits-2 - Kits-21 1
Bulk-1 - Bulk-3 1
Figure 499 0
499-1 1
Figure 500 - 505-1 0
505-2 1
Figure 506 - 509-1 0
Figure 510 - 510-1 1
Figure 511 - 512-1 0
I-1 - I-345 1

*Zero in this column indicates original page.

TECHNICAL MANUAL
NO. 9-2320-280-24P-2
NO. 2320-24P/8B

TECHNICAL ORDER
NO. 36A12-1A-3044-2

HEADQUARTERS, DEPARTMENTS
OF THE ARMY, THE
AIR FORCE, AND MARINE CORPS

WASHINGTON, D.C. *30 March 2001*

TECHNICAL MANUAL

VOLUME 2 OF 2
UNIT, DIRECT SUPPORT AND GENERAL SUPPORT MAINTENANCE
REPAIR PARTS AND SPECIAL TOOLS LIST
FOR

TRUCK, UTILITY: CARGO/TROOP CARRIER, 1-1/4 TON, 4X4, M998 (2320-01-107-7155) (EIC: BBD); M998A1 (2320-01-371-9577) (EIC: BBN);

TRUCK, UTILITY: CARGO/TROOP CARRIER, 1-1/4 TON, 4X4, W/WINCH, M1038 (2320-01-107-7156) (EIC: BBE); M1038A1 (2320-01-371-9578) (EIC: BBP);

TRUCK, UTILITY: HEAVY VARIANT, 4X4, M1097 (2320-01-346-9317) (EIC: BBM); M1097A1 (2320-01-371-9583) (EIC: BBU); M1097A2 (2320-01-380-8604) (EIC: BB6); M1123 (2320-01-455-9593) (EIC: B6G);

TRUCK, UTILITY: TOW CARRIER, ARMORED, 1-1/4 TON, 4X4, M966 (2320-01-107-7153) (EIC: BBC); M966A1 (2320-01-372-3932) (EIC: BBX); M1121 (2320-01-456-1282) (EIC: B6H);

TRUCK, UTILITY: TOW CARRIER, W/SUPPLEMENTAL ARMOR, 1-1/4 TON, 4X4, M1045 (2320-01-146-7191); M1045A1 (2320-01-371-9580) (EIC: BBR); M1045A2 (2320-01-380-8229) (EIC: BB5);

TRUCK, UTILITY: TOW CARRIER, W/SUPPLEMENTAL ARMOR, 1-1/4 TON, 4X4, W/WINCH, M1046 (2320-01-146-7188); M1046A1 (2320-01-371-9582) (EIC: BBT);

TRUCK, UTILITY: ARMAMENT CARRIER, ARMORED, 1-1/4 TON, 4X4, M1025 (2320-01-128-9551) (EIC: BBF); M1025A1 (2320-01-371-9584) (EIC: BBV); M1025A2 (2320-01-380-8233) (EIC: BB3);

TRUCK, UTILITY: ARMAMENT CARRIER, ARMORED, 1-1/4 TON, 4X4, W/WINCH, M1026 (2320-01-128-9552) (EIC: BBG); M1026A1 (2320-01-371-9579) (EIC: BBQ);

TRUCK, UTILITY: ARMAMENT CARRIER, W/SUPPLEMENTAL ARMOR, 1-1/4 TON, 4X4, M1043 (2320-01-146-7190); M1043A1 (2320-01-372-3933) (EIC: BBY); M1043A2 (2320-01-380-8213) (EIC: BB4);

TRUCK, UTILITY: ARMAMENT CARRIER, W/SUPPLEMENTAL ARMOR, 1-1/4 TON, 4X4, W/WINCH, M1044 (2320-01-146-7189); M1044A1 (2320-01-371-9581) (EIC: BBS);

TRUCK, UTILITY: S250 SHELTER CARRIER, 4X4, M1037 (2320-01-146-7193) (EIC: BBK);

TRUCK, UTILITY: S250 SHELTER CARRIER, 4X4, W/WINCH, M1042 (2320-01-146-7187);

TRUCK, AMBULANCE, 2-LITTER, ARMORED, 4X4, M996 (2310-01-111-2275) (EIC: BBB); M996A1 (2310-01-372-3935) (EIC: BB2);

TRUCK, AMBULANCE, 4-LITTER, ARMORED, 4X4, M997 (2310-01-111-2274) (EIC: BBA); M997A1 (2310-01-372-3934) (EIC: BBZ); M997A2 (2310-01-380-8225) (EIC: BB8);

TRUCK, AMBULANCE, 2-LITTER, SOFT TOP, 4X4, M1035 (2310-01-146-7194); M1035A1 (2310-01-371-9585) (EIC: BBW); M1035A2 (2310-01-380-8290) (EIC: BB9).

Current as of 1 January 2001

REPORTING ERRORS AND RECOMMENDING IMPROVEMENTS

(Army). You can help improve this publication. If you find any mistakes or if you know of a way to improve the procedures, please let us know. Submit your DA Form 2028 (Recommended Changes to Publication and Blank Forms), through the Internet, on the Army Electronic Product Support (AEPS) website. The Internet address is http://aeps.ria.army.mil. If you need a password, scroll down and click on "ACCESS REQUEST FORM". The DA Form 2028 is located in the ONLINE FORMS PROCESSING section of the AEPS. Fill out the form and click on SUBMIT. Using this form on the AEPS will enable us to respond quicker to your comments and better manage the DA Form 2028 program. You may also mail, fax or E-mail your letter or DA Form 2028 direct to: AMSTA-LC-CI/Tech Pubs, TACOM-RI, 1 Rock Island Arsenal, Rock Island, IL 61299-7630. The email address is TACOM-TECH-PUBS@ria.army.mil. The fax number is DSN 793-0726 or Commercial (309) 782-0726. (Marine Corps) Submit NAVMC Form 10772 to the Commanding General, Marine Corps Logistic Base (Code 850), Albany, GA 31704-5000.

Approved for public release; distribution is unlimited.

* This manual supersedes TM 9-2320-280-24P-2, dated 31 January 1996.

TABLE OF CONTENTS
VOLUME 2 OF 2

		Page	Illus Figure
Group 22	Body, chassis, and hull accessory items (Cont'd)		
	2202 Split rearview mirror and mounting hardware	329-1	329
	2202 Reflectors	330-1	330
	2202 Diverter assembly, defroster, and heater ducting	331-1	331
	2202 A2 diverter assembly, defroster, heater ducting, and radio brackets	332-1	332
	2202 Heater assembly, water valve, and controls	333-1	333
	2202 Heater fuel lines, filter to tank, M996, M996A1, M997, M997A1, and M997A2 ambulance	334-1	334
	2202 Fuel lines, personnel heater to fuel filter, M996 and M996A1 ambulance	335-1	335
	2202 Fuel lines, personnel heater to fuel filter, M997, M997A1, and M997A2 ambulance	336-1	336
	2202 Personnel heater assembly and attaching hardware, M996 and M996A1 ambulance	337-1	337
	2202 Antenna and intercom cables and mounting hardware, M997, M997A1, and M997A2 ambulance	338-1	338
	2202 Antenna and intercom cables and mounting hardware, M996 and M996A1 ambulance	339-1	339
	2202 Antenna mount and mounting hardware, M996 and M996A1 ambulance	340-1	340
	2202 Antenna mount and mounting hardware, M997, M997A1, and M997A2 ambulance	341-1	341
	2202 Heater blower assembly, M996 and M996A1 ambulance	342-1	342
	2202 Heater, filter, and attaching hardware, M997, M997A1, and M997A2 ambulance	343-1	343
	2202 Air intake filter, M996 and M996A1 ambulance	344-1	344
	2202 Heater assembly, multifuel, B-model, M996, M996A1, M997, M997A1, and M997A2 ambulance	345-1	345
	2202 Heater grille, exhaust pipe, and mounting hardware, M996, and M996A1 ambulance	346-1	346
	2202 Heater grille, exhaust pipe, and mounting hardware, M997, M997A1, and M997A2 ambulance	347-1	347
	2202 Heater assembly, multifuel, A-model, M996, M996A1, M997, M997A1, and M997A2 ambulance	348-1	348
	2202 Heater component bracket assembly, B-model, M996, M996A1, M997, M997A1, and M997A2 ambulance	349-1	349
	2202 Burner assembly, B-model, M996, M996A1, M997, M997A1, and M997A2 ambulance	350-1	350
	2202 Burner assembly, A-model, M997, M997A1, and M997A2 ambulance	351-1	351
	2202 Sun visor assembly and mounting hardware	352-1	352
	2202 Ambulance spreader assembly	353-1	353
	2210 Data plates, dash panel	354-1	354
	2210 Data plates, battery cable and slave receptacle	355-1	355
	2210 Data plates, surge tank, fan shroud, and cook stove	356-1	356
	2210 Data plates, generator, transfer case, and engine container	357-1	357
	2210 Data plates, winch	358-1	358
	2210 Data plates, TOW carrier	359-1	359
	2210 Data plates, TOW carrier	360-1	360
	2210 Data plates, sights, traversing unit, night vision goggles, and radiac meter	361-1	361

TABLE OF CONTENTS (Cont'd)

			Page	Illus Figure
	2210	Data plates and identification tags, M996, M996A1, M997, M997A1, and M997A2 ambulance	362-1	362
Group 33		Special purpose kits	363-1	363
	3301	Engine shipping container assembly	363-1	363
	3303	Arctic kit, fuel injection pump, engine gaskets, and CDR tube	364-1	364
	3303	Arctic kit, pan cover and heater tube	365-1	365
	3303	Arctic kit, control box, gas cap, fuel pump, and fuel lines	366-1	366
	3303	Arctic kit, control box assembly	367-1	367
	3303	Arctic kit, heater assembly, plenum assembly, and related components	368-1	368
	3303	Arctic kit, battery box components, insulation, and control box connector	369-1	369
	3303	Arctic kit, diverter box, defroster, heater ducting, and radio rack bracket	370-1	370
	3303	Arctic kit, heater duct assembly	371-1	371
	3303	Arctic kit, diverter box, ducting, insulation, and radio mounting brackets	372-1	372
	3303	Arctic kit, two man crew, bow, and mounting components	373-1	373
	3303	Arctic kit, two man crew curtain fasteners	374-1	374
	3303	Arctic kit, two man crew, top curtain, rear curtain, and door assemblies	375-1	375
	3303	Arctic kit, four man crew, top enclosure, bows, and mounting components	376-1	376
	3303	Arctic kit, door hinges, and curtain channels	377-1	377
	3303	Arctic kit, four man crew, top curtain, rear curtain, and door assemblies	378-1	378
	3303	Swingfire heater kit and related parts	379-1	379
	3303	Swingfire heater kit, circuit breaker and related parts	380-1	380
	3303	Swingfire heater kit, harness assemblies	381-1	381
	3303	Two door seat and floor covers	382-1	382
	3303	Cargo floor cover and harness assembly	383-1	383
	3303	Winterization kit, fuel pump and attaching hardware	384-1	384
	3303	Fuel pump tube assembly	385-1	385
	3303	Winterization kit, fuel line and jumper cable	386-1	386
	3303	Winterization kit, heater and exhaust diverter assembly	387-1	387
	3303	Winterization kit, control box, filter, and cover assembly	388-1	388
	3303	Seat support assemblies and mounting hardware	389-1	389
	3303	Step assembly, support assembly, and mounting hardware	390-1	390
	3303	Top plate support and attaching hardware	391-1	391
	3303	Fuel can bracket, antenna mounting bracket, and composite light housing mounting hardware	392-1	392
	3303	Mounting plates and ventilator exhaust ducting	393-1	393
	3303	Screw caps and winterization instruction plate	394-1	394
	3303	Top cover assembly and mounting hardware	395-1	395
	3303	Wiring harness channel and hardware	396-1	396
	3303	End closures, door assembly, and mounting hardware	397-1	397
	3303	Engine and crew compartment heater and related parts	397A-1	397A
	3303	Engine and crew compartment heater support bracket, heat shield, and mounting hardware	397B-1	397B
	3303	Engine and crew compartment heater switch, fuel lines, and mounting hardware	397C-1	397C
	3303	Engine and crew compartment heater fuel supply and return lines, muffler, and mounting hardware	397D-1	397D
	3303	Engine and crew compartment heater fuel pump, lines, and mounting hardware	397E-1	397E

TABLE OF CONTENTS (Cont'd)

		Page	Illus Figure
3305	Deep water fording kit, intake and exhaust systems	398-1	398
3305	Deep water fording kit, selector valve, sensor cup, and vent lines	399-1	399
3305	Deep water fording kit, hydro-boost vent line, engine and transmission dipstick, and tube assemblies	400-1	400
3305	Supplemental deep water fording kit	401-1	401
3307	Troop seat kit, safety strap, and mounting hardware	402-1	402
3307	Troop seat assembly, left and right	403-1	403
	Deleted	404-1	404
	Deleted	405-1	405
	Deleted	406-1	406
	Deleted	407-1	407
	Deleted	408-1	408
3307	Communications kit, radio rack assembly, and mounting hardware, AN/GRC-160 and TSEC/KY-57	409-1	409
3307	Communications kit, radio cables, AN/GRC-160, AN/VRC-46, and TSEC/KY-57	410-1	410
3307	Communications kit, radio rack assembly, and mounting hardware, AN/GRC-160 and TSEC/KY-57, TOW carrier	411-1	411
3307	Communications kit, radio cables, AN/GRC-160, AN/VRC-46, and TSEC/KY-57, TOW carrier	412-1	412
3307	Communications kit, radio rack assembly, AN/VRC-47 and (2) TSEC/KY-57 assemblies	413-1	413
3307	Communications kit, radio cables, AN/VRC-47 and (2) TSEC/KY-57 assemblies	414-1	414
3307	Communications kit, radio rack assembly, AN/VRC-49 and (2) TSEC/KY-57 assemblies	415-1	415
3307	Communications kit, radio cables, AN/VRC-49 and (2) TSEC/KY-57 assemblies	416-1	416
3307	Communications kit, radio rack assembly	417-1	417
3307	Communications kit, radio rack assembly mounting hardware, AN/VRC-46	418-1	418
3307	Communications kit, radio rack assembly mounting hardware, (2) AN/VRC-46	419-1	419
3307	Communications kit, radio rack assembly mounting hardware, (3) AN/VRC-46	420-1	420
3307	Communications kit, radio rack assembly mounting hardware, AN/VRC-47	421-1	421
3307	Communications kit, radio rack assembly mounting hardware, AN/VRC-48	422-1	422
3307	Communications kit, radio rack assembly mounting hardware, AN/VRC-49	423-1	423
3307	Communications kit, radio cable, main power	424-1	424
3307	Communications kit, radio cables, AN/VRC-47 and AN/VRC-48	425-1	425
3307	Communications kit, radio cables, AN/VRC-46, (2) AN/VRC-46, (3) AN/VRC-46, AN/VRC-47, AN/VRC-48, and AN/VRC-49	426-1	426
3307	Communications kit, radio cables, (2) AN/VRC-46, (3) AN/VRC-47, and AN/VRC-49	427-1	427
3307	Communications kit, radio cables, (3) AN/VRC-46	428-1	428
3307	81 MM mortar kit, container assembly, and stowage rack	429-1	429
3307	81 MM mortar kit, equipment rack assembly, barrel stowage bracket, and bipod stowage tray assembly	430-1	430
3307	Traversing bar kit	431-1	431
3307	Rearview mirror mounting kit	432-1	432

TABLE OF CONTENTS (Cont'd)

		Page	Illus Figure
3307	Cargo barrier extension kit	433-1	433
3307	Slave receptacle kit	434-1	434
3307	Slave receptacle with power cable assembly kit	435-1	435
3307	Power steering oil cooler kit	436-1	436
3307	Brushguard kit (Basic and A1 series)	437-1	437
3307	Kit, S250 shelter mounting components	438-1	438
3307	Kit, S250 shelter tailgate mounting components	439-1	439
3307	Kit, camouflage rack and stowage rack assembly	440-1	440
3307	Kit, prime mover, lt. howitzer, 105MM L119, front bumper	441-1	441
3307	Kit, prime mover, lt. howitzer, 105MM L119, rear bumper	442-1	442
3307	Kit, prime mover, lt. howitzer, 105MM L119, winch	443-1	443
3307	Kit, prime mover, lt. howitzer, 105MM L119, winch control and storage box	444-1	444
3307	Kit, prime mover, lt. howitzer, 105MM L119, trailer receptacle and body wiring harness	445-1	445
3307	Kit, prime mover, lt. howitzer, 105MM L119, ammo rack and sight boxes stowage	446-1	446
3307	Kit, prime mover, lt. howitzer, 105MM L119, telephone, remote, and tripod stowage	447-1	447
3307	Kit, prime mover, lt. howitzer, 105MM L119, fuel can, water can, section chest, and spade stowage	448-1	448
3307	Kit, prime mover, lt. howitzer, 105MM L119, G.D.U. and G.D.U. battery stowage	449-1	449
3307	Kit, prime mover, lt. howitzer, 105MM L119, aiming post and cable reel stowage	450-1	450
3307	Kit, prime mover, lt. howitzer, 105MM L119, pioneer tool stowage tray hardware and parking brake hardware	451-1	451
3307	Kit, towed vulcan system	452-1	452
3307	Kit, pintle extension	453-1	453
3307	Kit, rear seat assembly	454-1	454
3307	Kit, man portable air-defense system (MANPADS)	455-1	455
3307	Kit, 9,000 lb winch	456-1	456
3307	Kit, 9,000 lb winch	457-1	457
3307	9,000 lb winch assembly	458-1	458
3307	Modification kit, sun visor	459-1	459
3307	Modification kit, windshield retainer	460-1	460
3307	Left rearview mirror relocation kit	461-1	461
3307	Brushguard kit	462-1	462
3307	Underbody protection kit with and without winch	463-1	463
3307	Underbody protection kit, transfercase, fuel tank shields, and sway bar link nuts	464-1	464
3307	Cover, access cargo floor modification kit	465-1	465
	Deleted	466-1	466
3307	R-12 to FR12 refrigerant conversion retrofit kit	467-1	467
3307	Hand throttle control kit	468-1	468
3307	10,500 lb hydraulic winch accessory kit	469-1	469
3307	10,500 lb hydraulic winch winch accessory kit	470-1	470
3307	10,500 lb hydraulic winch accessory kit	471-1	471
3307	100 AMP dual voltage alternator and regulator mounting hardware kit	472-1	472
3307	100/200 AMP dual voltage alternator and regulator mounting hardware kit	473-1	473
3307	100/200 AMP dual voltage alternator wiring harness	474-1	474
3307	200 AMP dual voltage alternator and regulator mounting hardware kit	475-1	475

TABLE OF CONTENTS (Cont'd)

		Page	Illus Figure
	3307 400 AMP alternator kit	476-1	476
	3307 Power steering pump and hoses-400 AMP alternator kit	477-1	477
	3307 Speedometer cable assembly-400 AMP alternator kit	478-1	478
	3307 Dipstick and dummy connector plug-400 AMP alternator kit	479-1	479
	3307 400 AMP alternator wiring harness cable assemblies	480-1	480
	3307 Buss assembly-400 AMP alternator kit	481-1	481
	3307 Tachometer parts kit	482-1	482
	3307 Tachometer parts kit	483-1	483
	3307 Tachometer parts kit	484-1	484
	3307 Precision Lightweight Global Positioning System Receiver (PLGR)	485-1	485
	3307 Kit, intercom bracket	486-1	486
	3307 Kit, rear hatch support	487-1	487
	3307 Flexible Brake Line Kit	487A-1	487A
	3307 Flexible Brake Line Kit	487B-1	487B
	3307 Flexible Brake Line Kit	487C-1	487C
	3307 Flexible Brake Line Kit	487D-1	487D
Group 47	Gauges, weighing, and measuring devices	488-1	488
	4701 Speedometer, speedometer drive, and related parts	488-1	488
	4702 Air restriction indicator assembly	489-1	489
Group 52	Refrigeration, air conditioner, heater, and air conditioning components	490-1	490
	5203 Air conditioner compressor and mounting hardware, M997 and M997A1 ambulance	490-1	490
	5203 A/C compressor, idler pulley, tensioner, and related parts (Serial Number 196901 and Above)	490A-1	490A
	5203 Air conditioner compressor assembly, M997 and M997A1 ambulance	491-1	491
	5217 Air conditioner lines and fittings, M997, M997A1, and M997A2 ambulance	492-1	492
	5217 Air conditioner condenser and evaporator lines, M997, M997A1, and M997A2 ambulance	493-1	493
	5230 Heater and air conditioning condenser, M997, M997A1, and M997A2 ambulance	494-1	494
	5230 Heater and air conditioning condenser, M997, M997A1, and M997A2 ambulance	495-1	495
	5241 Air conditioning evaporator and mounting hardware, M997, M997A1, and M997A2 ambulance	496-1	496
	5243 Evaporator blower motor assembly covers, M997, M997A1, and M997A2 ambulance	497-1	497
	5243 Evaporator blower motor assembly, M997, M997A1, and M997A2 ambulance	498-1	498
Group 94	Kits	Kits 1	
	9401 Repair parts kits	Kits-1	
Group 95	Bulk material	Bulk-1	
	9501 Bulk	Bulk-1	
Section III	SPECIAL TOOLS LIST	499-1	
Group 26	Tools and test equipment	499-1	499
	2604 Special tools, drive belts and transmission	499-1	499
	2604 Special tools, transmission	500-1	500
	2604 Special tools, transfer case	501-1	501
	2604 Special tools, axle differential	502-1	502
	2604 Special tools, geared hub and steering	503-1	503
	2604 Special tools, steering pump, body, and speedometer drive	504-1	504
	2604 Special tools, multipurpose	505-1	505

TABLE OF CONTENTS

		Page	Illus Figure
	2604 Special tools, air conditioner compressor	506-1	506
	2604 Special tools, air conditioner compressor	507-1	507
	2604 Special tools, air conditioner compressor	508-1	508
	2604 Special tools, air conditioner compressor tool kit	509-1	509
	2604 Special tools, transmission, transfer case, and engine A2	510-1	510
	2604 Special tools, transmission, transfer case, and engine A2	511-1	511
	2604 Pinion setting kit	512-1	512
Section IV	CROSS-REFERENCE INDEXES	I-1	
	National Stock Number Index	I-1	
	Part Number Index	I-114	

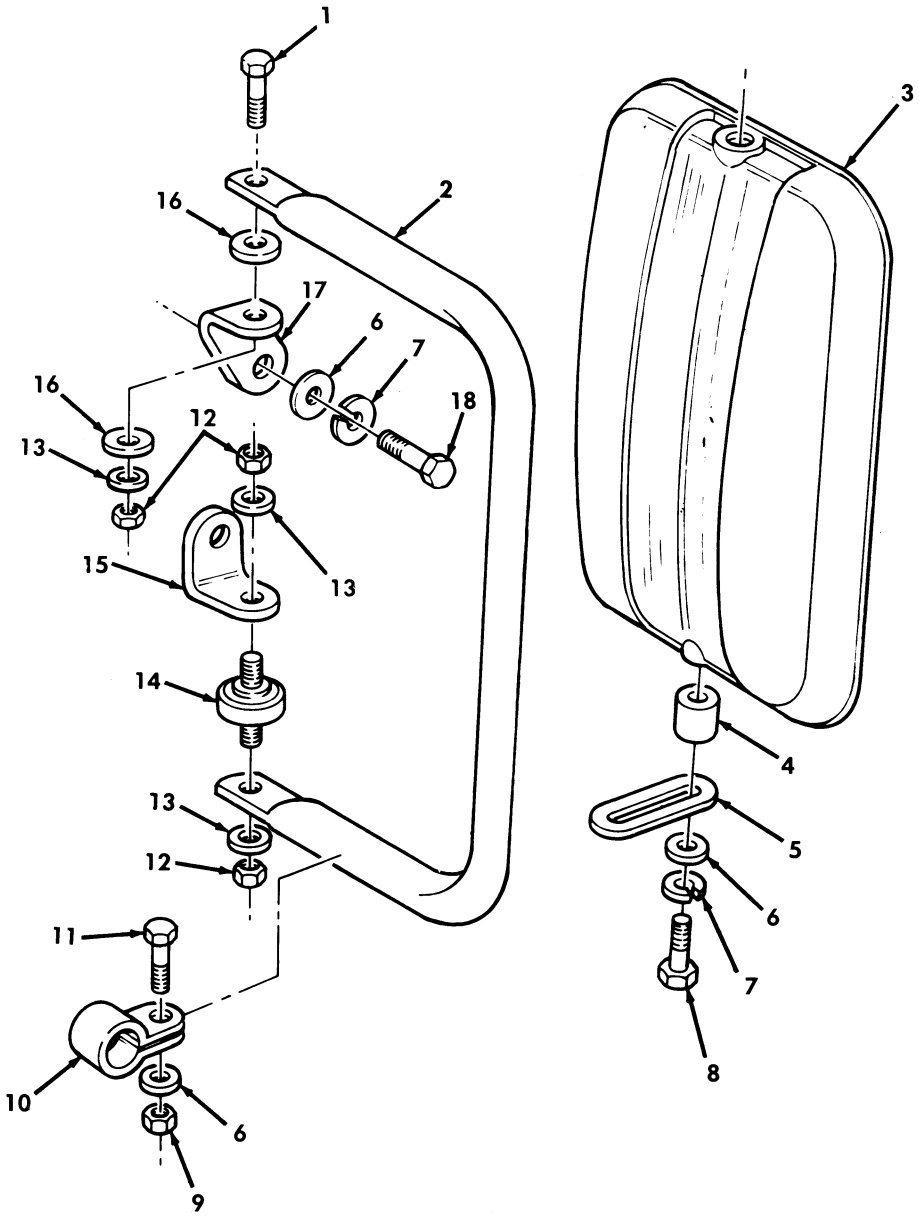

Figure 329. Split Rearview Mirror and Mounting Hardware.

(1) ITEM NO	(2) SMR CODE	(3) NSN	(4) CAGEC	(5) PART NUMBER	(6) DESCRIPTION AND USABLE ON CODES(UOC)	(7) QTY
					GROUP 2202 ACCESSORY ITEMS	
					FIG. 329 SPLIT REARVIEW MIRROR AND MOUNTING HARDWARE	
1	PAOZZ	5305005432419	80204	B1821BH038C113N	SCREW,CAP,HEXAGON H 3/8-16 X 1-1/8, USBL EFF 100,000 AND ABOVE.....	1
2	PAOZZ	2540013141188	19207	12342131	ARM,REARVIEW MIRROR USBL EFF 100, 000 AND ABOVE.....	1
* 3	PAOZZ	2540013141189	70082	0462	MIRROR HEAD,VEHICUL GREEN R.H. USBL EFF 100,000 AND ABOVE.....	1
* 3	PAOZZ	2540013141190	70082	0461	MIRROR HEAD,VEHICUL GREEN L.H. USBL EFF 100,000 AND ABOVE..... UOC:AVY,A11,A13,A14,A15,A20,A24,A25, A26,A27,B16,B17,B18,HVY,H11,H13,H14, H15,H16,H17,H18,H20,H21,H24,H25,H26, H27,H28,MMM	1
* 3	PAOZZ	2540014873616	70082	0462A	MIRROR ASSEMBLY,REA TAN R.H.....	1
* 3	PAOZZ	2540014873626	70082	1305A	MIRROR ASSEMBLY,REA TAN L.H.,LOWER MOUNT ONLY.....	1
* 3	PAOZZ	2540014108794	70082	1351	MIRROR HEAD,VEHICUL GREEN L.H, LOWER MOUNT ONLY.....	1
4	PAOZZ	5365013153595	19207	12342139	SPACER,SLEEVE USBL EFF 100,000 AND ABOVE.....	2
5	PAOZZ	2540013142101	19207	12342138	ARM,REARVIEW MIRROR USBL EFF 100, 000 AND ABOVE.....	2
6	PAOZZ	5310013893455	79410	120393	WASHER,LOCK 5/16,USBL EFF 100,000 AND ABOVE.....	6
7	PAOZZ	5310004079566	96906	MS35338-45	WASHER,LOCK 5/16,USBL EFF 100,000 AND ABOVE.....	4
8	PAOZZ	5306002258503	96906	MS90725-39	BOLT,MACHINE 5/16-18 X 1-3/4, USBL EFF 100,000.....	2
9	PAOZZ	5310008140673	96906	MS51943-33	NUT,SELF-LOCKING,HE 5/16-18,USBL EFF 100,000 AND ABOVE.....	2
10	PAOZZ	5340013153611	19207	12342132	CLAMP,LOOP USBL EFF 100,000 AND ABOVE.....	2
11	PAOZZ	5306002258499	96906	MS90725-34	BOLT,MACHINE 5/16-18 X 1.00 USBL EFF 100,000 AND ABOVE.....	2
12	PAOZZ	5310011269404	24617	9422277	NUT,SELF-LOCKING,HE 3/8-16 USBL EFF 100,000 AND ABOVE.....	6
13	PAOZZ	5310000806004	96906	MS27183-14	WASHER,FLAT 3/8,USBL EFF 100,000 AND ABOVE.....	6
14	PAOZZ	5307013162986	70082	6185	STUD,LOCKED IN USBL EFF 100,000 AND ABOVE.....	2
15	PAOZZ	5340014086460	19207	12343063	BRACKET,ANGLE LOWER L.H..... UOC:BVY,B15,B20,B24,B25,C17,NNN	1
15	PFOZZ	5340013141956	19207	12342137	BRACKET,ANGLE LOWER L.H. USBL EFF 100,000 AND ABOVE..... UOC:AVY,A11,A13,A14,A15,A20,A24,A25, A26,A27,B16,B17,B18,HVY,H11,H13,H14, H15,H16,H17,H18,H20,H21,H24,H25,H26, H27,H28,MMM	1
15	PAOZZ	5340013162959	19207	12342136	BRACKET,ANGLE LOWER R.H. USBL EFF	1

(1) ITEM NO	(2) SMR CODE	(3) NSN	(4) CAGEC	(5) PART NUMBER	(6) DESCRIPTION AND USABLE ON CODES(UOC)	(7) QTY
					100,000 AND ABOVE.....	
16	PAOZZ	5310013133562	96906	MS51859-20	WASHER,FLAT 3/8,USBL EFF 100,000 AND ABOVE.....	4
17	PAOZZ	5340014086456	19207	12343062	BRACKET,ANGLE UPPER L.H..... UOC:BVY,B15,B20,B24,B25,C17,NNN	1
17	PAOZZ	5340013141955	19207	12342135	BRACKET,ANGLE UPPER L.H.,USBL EFF 100,000 AND ABOVE..... UOC:AVY,A11,A13,A14,A15,A20,A24,A25, A26,A27,B16,B17,B18,HVY,H11,H13,H14, H15,H16,H17,H18,H20,H21,H24,H25,H26, H27,H28,MMM	1
17	PAOZZ	5340013161507	19207	12342134	BRACKET,ANGLE UPPER R.H. USBL 100, 000 AND ABOVE.....	1
18	PAOZZ	5306002264827	80204	B1821BH031C100N	BOLT,MACHINE 5/16-18 X 1.00,USBL EFF 100,000 AND ABOVE.....	2

END OF FIGURE

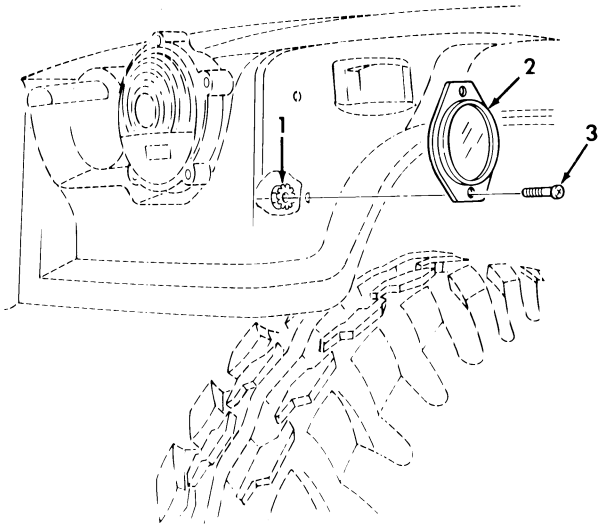

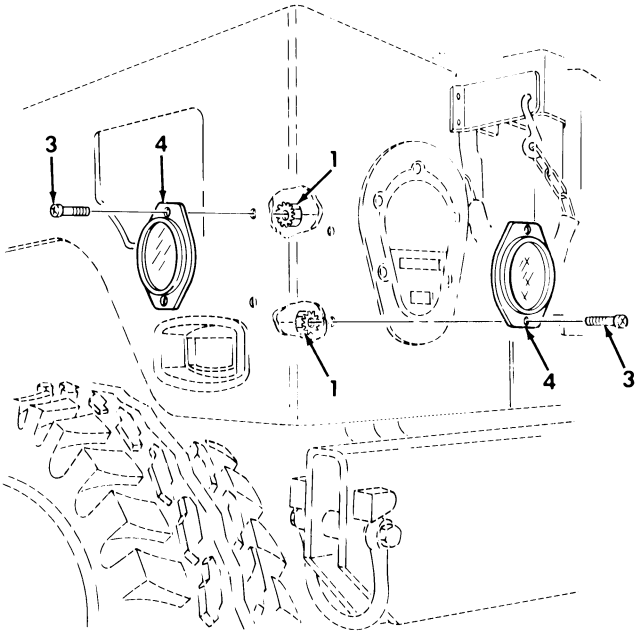

Figure 330. Reflectors.

(1) ITEM NO	(2) SMR CODE	(3) NSN	(4) CAGEC	(5) PART NUMBER	(6) DESCRIPTION AND USABLE ON CODES(UOC)	(7) QTY
					GROUP 2202 ACCESSORY ITEMS	
					FIG. 330 REFLECTORS	
1	PAOZZ	5310012522999	34623	5593033	NUT,SELF-LOCKING,AS 1/4-20.....	12
2	PAOZZ	9905002023639	96906	MS35387-2	REFLECTOR,INDICATIN AMBER.....	2
3	PAOZZ	5305009881724	96906	MS35206-280	SCREW,MACHINE 1/4-20 X 5/8.....	12
4	PAOZZ	9905009772727	80753	49RED	REFLECTOR,INDICATIN RED.....	4

END OF FIGURE

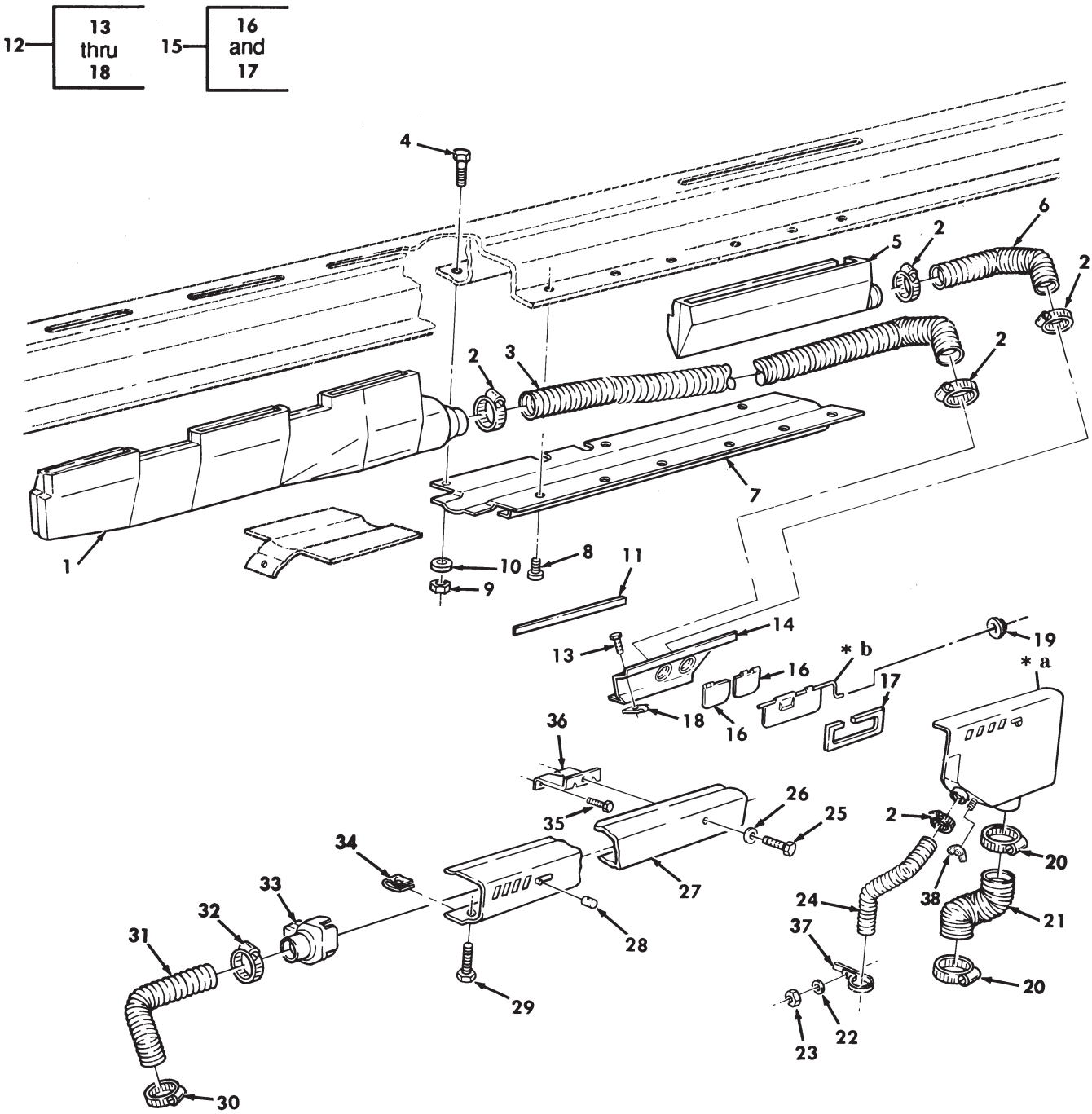

* a PART OF ITEM 12
* b PART OF ITEM 15

Figure 331. Diverter Assembly, Defroster, and Heater Ducting.

(1) ITEM NO	(2) SMR CODE	(3) NSN	(4) CAGEC	(5) PART NUMBER	(6) DESCRIPTION AND USABLE ON CODES(UOC)	(7) QTY
					GROUP 2202 ACCESSORY ITEMS	
					FIG. 331 DIVERTER ASSEMBLY,DEFROSTER ,AND HEATER DUCTING	
1	PFOZZ	2910011845499	19207	12339289	NOZZLE,DEFROSTER L.H..... UOC:AVY,A11,A13,A14,A15,A20,A24,A25, A26,A27,B16,B17,B18,HVY,H11,H13,H14, H15,H16,H17,H18,H20,H21,H24,H25,H26, H27,H28,MMM	1
2	PAOZZ	4730010921904	66295	SIZE83	CLAMP,HOSE..... UOC:AVY,A11,A13,A14,A15,A20,A24,A25, A26,A27,B16,B17,B18,HVY,H11,H13,H14, H15,H16,H17,H18,H20,H21,H24,H25,H26, H27,H28,MMM	5
3	PAOZZ	4720014481655	19207	12339265-1	HOSE,AIR DUCT..... UOC:AVY,A11,A13,A14,A15,A20,A24,A25, A26,A27,B16,B17,B18,HVY,H11,H13,H14, H15,H16,H17,H18,H20,H21,H24,H25,H26, H27,H28,MMM	1
4	PAOZZ	5306012707332	34623	5594178	BOLT,MACHINE 1/4-20 X 7/8..... UOC:AVY,A11,A13,A14,A15,A20,A24,A25, A26,A27,B16,B17,B18,HVY,H11,H13,H14, H15,H16,H17,H18,H20,H21,H24,H25,H26, H27,H28,MMM	3
5	PFOZZ	2910011845498	19207	12339292	NOZZLE,DEFROSTER R.H..... UOC:AVY,A11,A13,A14,A15,A20,A24,A25, A26,A27,B16,B17,B18,HVY,H11,H13,H14, H15,H16,H17,H18,H20,H21,H24,H25,H26, H27,H28,MMM	1
6	MOOZZ		19207	12339265-2	DUCT,FLEX MAKE FROM HOSE,P/N AD778- 08B79,7 INCHES LONG..... UOC:AVY,A11,A13,A14,A15,A20,A24,A25, A26,A27,B16,B17,B18,HVY,H11,H13,H14, H15,H16,H17,H18,H20,H21,H24,H25,H26, H27,H28,MMM	1
7	PFOZZ	2510013070152	34623	5593615	PANEL,BODY,VEHICULA..... UOC:AVY,A11,A13,A14,A15,A20,A24,A25, A26,A27,B16,B17,B18,HVY,H11,H13,H14, H15,H16,H17,H18,H20,H21,H24,H25,H26, H27,H28,MMM	1
8	PAOZZ	5305012553588	7X677	164830	SCREW,TAPPING 3/8-16 X 1/2..... UOC:AVY,A11,A13,A14,A15,A20,A24,A25, A26,A27,B16,B17,B18,HVY,H11,H13,H14, H15,H16,H17,H18,H20,H21,H24,H25,H26, H27,H28,MMM	6
9	PAOZZ	5310000614650	96906	MS51943-31	NUT,SELF-LOCKING,HE 1/4-20..... UOC:AVY,A11,A13,A14,A15,A20,A24,A25, A26,A27,B16,B17,B18,HVY,H11,H13,H14, H15,H16,H17,H18,H20,H21,H24,H25,H26, H27,H28,MMM	3
10	PAOZZ	5310011023270	24617	2436161	WASHER,FLAT 1/4..... UOC:AVY,A11,A13,A14,A15,A20,A24,A25,	3

(1) ITEM NO	(2) SMR CODE	(3) NSN	(4) CAGEC	(5) PART NUMBER	(6) DESCRIPTION AND USABLE ON CODES(UOC)	(7) QTY
					A26,A27,B16,B17,B18,HVY,H11,H13,H14, H15,H16,H17,H18,H20,H21,H24,H25,H26, H27,H28,MMM	
11	PAOZZ	5330012097817	19207	12339228-7	SEAL,RUBBER STRIP..... UOC:AVY,A11,A13,A14,A15,A20,A24,A25, A26,A27,B16,B17,B18,HVY,H11,H13,H14, H15,H16,H17,H18,H20,H21,H24,H25,H26, H27,H28,MMM	1
12	PFOZZ	2510011845497	19207	12339291	HOUSING ASSEMBLY,HE..... UOC:AVY,A11,A13,A14,A15,A20,A24,A25, A26,A27,B16,B17,B18,HVY,H11,H13,H14, H15,H16,H17,H18,H20,H21,H24,H25,H26, H27,H28,MMM	1
13	PAOZZ	5305011878757	7X677	274707	.SCREW,MACHINE #10-24 X 1/2..... UOC:AVY,A11,A13,A14,A15,A20,A24,A25, A26,A27,B16,B17,B18,HVY,H11,H13,H14, H15,H16,H17,H18,H20,H21,H24,H25,H26, H27,H28,MMM	5
14	PFOZZ	2540012101325	19207	12339283	.PANEL ASSEMBLY,DIVE..... UOC:AVY,A11,A13,A14,A15,A20,A24,A25, A26,A27,B16,B17,B18,HVY,H11,H13,H14, H15,H16,H17,H18,H20,H21,H24,H25,H26, H27,H28,MMM	1
15	PAOZZ	2510012102748	19207	12339273	.DOOR,METAL,SWINGING..... UOC:AVY,A11,A13,A14,A15,A20,A24,A25, A26,A27,B16,B17,B18,HVY,H11,H13,H14, H15,H16,H17,H18,H20,H21,H24,H25,H26, H27,H28,MMM	1
16	PAOZZ	5330012097842	19207	12339267	..SEAL,NONMETALLIC SP..... UOC:AVY,A11,A13,A14,A15,A20,A24,A25, A26,A27,B16,B17,B18,HVY,H11,H13,H14, H15,H16,H17,H18,H20,H21,H24,H25,H26, H27,H28,MMM	2
17	PFOZZ	5330011858709	34623	12339255	..GASKET..... UOC:AVY,A11,A13,A14,A15,A20,A24,A25, A26,A27,B16,B17,B18,HVY,H11,H13,H14, H15,H16,H17,H18,H20,H21,H24,H25,H26, H27,H28,MMM	1
18	PAOZZ	5310012155356	78553	C8117-1024	.NUT,SHEET SPRING..... UOC:AVY,A11,A13,A14,A15,A20,A24,A25, A26,A27,B16,B17,B18,HVY,H11,H13,H14, H15,H16,H17,H18,H20,H21,H24,H25,H26, H27,H28,MMM	5
19	PAOZZ	5340013327599	19207	12340258	BUTTON,PLUG..... UOC:AVY,A11,A13,A14,A15,A20,A24,A25, A26,A27,B16,B17,B18,HVY,H11,H13,H14, H15,H16,H17,H18,H20,H21,H24,H25,H26, H27,H28,MMM	1
20	PAOZZ	4730009086292	96906	MS35842-14	CLAMP,HOSE..... UOC:AVY,A11,A13,A14,A15,A20,A24,A25, A26,A27,B16,B17,B18,HVY,H11,H13,H14, H15,H16,H17,H18,H20,H21,H24,H25,H26, H27,H28,MMM	2

(1) ITEM NO	(2) SMR CODE	(3) NSN	(4) CAGEC	(5) PART NUMBER	(6) DESCRIPTION AND USABLE ON CODES(UOC)	(7) QTY
21	PAOZZ	4720012795150	19207	12339265-8	DUCT,FLEX..... UOC:AVY,A11,A13,A14,A15,A20,A24,A25, A26,A27,B16,B17,B18,HVY,H11,H13,H14, H15,H16,H17,H18,H20,H21,H24,H25,H26, H27,H28,MMM	1
22	PAOZZ	5310000145850	96906	MS27183-42	WASHER,FLAT #10..... UOC:AVY,A11,A13,A14,A15,A20,A24,A25, A26,A27,B16,B17,B18,HVY,H11,H13,H14, H15,H16,H17,H18,H20,H21,H24,H25,H26, H27,H28,MMM	1
23	PAOZZ	5310012538928	34623	5592995	NUT,PLAIN,EXTENDED #10-24..... UOC:AVY,A11,A13,A14,A15,A20,A24,A25, A26,A27,B16,B17,B18,HVY,H11,H13,H14, H15,H16,H17,H18,H20,H21,H24,H25,H26, H27,H28,MMM	1
24	PAOZZ	4720012716985	19207	12339265-9	HOSE,AIR DUCT..... UOC:AVY,A11,A13,A14,A15,A20,A24,A25, A26,A27,B16,B17,B18,HVY,H11,H13,H14, H15,H16,H17,H18,H20,H21,H24,H25,H26, H27,H28,MMM	1
25	PAOZZ	5305000680502	96906	MS90725-6	SCREW,CAP,HEXAGON H 1/4-20 X 3/4... UOC:AVY,A11,A13,A14,A15,A20,A24,A25, A26,A27,B16,B17,B18,HVY,H11,H13,H14, H15,H16,H17,H18,H20,H21,H24,H25,H26, H27,H28,MMM	2
26	PAOZZ	5310008094058	96906	MS27183-10	WASHER,FLAT 1/4..... UOC:AVY,A11,A13,A14,A15,A20,A24,A25, A26,A27,B16,B17,B18,HVY,H11,H13,H14, H15,H16,H17,H18,H20,H21,H24,H25,H26, H27,H28,MMM	2
27	PFOZZ	2540012125815	19207	12339281	VENTILATOR,AIR CIRC..... UOC:AVY,A11,A13,A14,A15,A20,A24,A25, A26,A27,B16,B17,B18,HVY,H11,H13,H14, H15,H16,H17,H18,H20,H21,H24,H25,H26, H27,H28,MMM	1
28	PAOZZ	5355012473593	34623	5596249	KNOB..... UOC:AVY,A11,A13,A14,A15,A20,A24,A25, A26,A27,B16,B17,B18,HVY,H11,H13,H14, H15,H16,H17,H18,H20,H21,H24,H25,H26, H27,H28,MMM	2
29	PAOZZ	5305004324205	96906	MS51861-49	SCREW,TAPPING #10-16 X 1.00..... UOC:AVY,A11,A13,A14,A15,A20,A24,A25, A26,A27,B16,B17,B18,HVY,H11,H13,H14, H15,H16,H17,H18,H20,H21,H24,H25,H26, H27,H28,MMM	9
30	PAOZZ	4730002782523	19207	11608950-6	CLAMP,HOSE..... UOC:AVY,A11,A13,A14,A15,A20,A24,A25, A26,A27,B16,B17,B18,HVY,H11,H13,H14, H15,H16,H17,H18,H20,H21,H24,H25,H26, H27,H28,MMM	1
31	PAOZZ	4720012795149	34623	12339265-3	HOSE,AIR DUCT..... UOC:AVY,A11,A13,A14,A15,A20,A24,A25, A26,A27,B16,B17,B18,HVY,H11,H13,H14,	1

(1) ITEM NO	(2) SMR CODE	(3) NSN	(4) CAGEC	(5) PART NUMBER	(6) DESCRIPTION AND USABLE ON CODES(UOC)	(7) QTY
					H15,H16,H17,H18,H20,H21,H24,H25,H26, H27,H28,MMM	
32	PAOZZ	4730012550925	34623	5593309	CLAMP,HOSE..... UOC:AVY,A11,A13,A14,A15,A20,A24,A25, A26,A27,B16,B17,B18,HVY,H11,H13,H14, H15,H16,H17,H18,H20,H21,H24,H25,H26, H27,H28,MMM	1
33	PFOZZ	2590011868704	19207	12339252	BRACKET,VEHICULAR C..... UOC:AVY,A11,A13,A14,A15,A20,A24,A25, A26,A27,B16,B17,B18,HVY,H11,H13,H14, H15,H16,H17,H18,H20,H21,H24,H25,H26, H27,H28,MMM	1
34	PAOZZ	5310011947066	72800	C7685-10A	NUT,SHEET SPRING #10-16..... UOC:AVY,A11,A13,A14,A15,A20,A24,A25, A26,A27,B16,B17,B18,HVY,H11,H13,H14, H15,H16,H17,H18,H20,H21,H24,H25,H26, H27,H28,MMM	9
35	PAOZZ	5305000680508	80204	B1821BH025C075N	SCREW,CAP,HEXAGON H 1/4-20 X 3/4... UOC:AVY,A11,A13,A14,A15,A20,A24,A25, A26,A27,B16,B17,B18,HVY,H11,H13,H14, H15,H16,H17,H18,H20,H21,H24,H25,H26, H27,H28,MMM	4
* 36	PFOZZ	5340014764374	19207	12446765	BRACKET,DOUBLE ANGL..... UOC:AVY,A11,A13,A14,A15,A20,A24,A25, A26,A27,B16,B17,B18,HVY,H11,H13,H14, H15,H16,H17,H18,H20,H21,H24,H25,H26, H27,H28,MMM	2
* 37	PAOZA	5340014809600	92878	30232	CLAMP,LOOP..... UOC:AVY,A11,A13,A14,A15,A20,A24,A25, A26,A27,B16,B17,B18,HVY,H11,H13,H14, H15,H16,H17,H18,H20,H21,H24,H25,H26, H27,H28,MMM	1
* 38	PFOZZ	5310011061144	96906	MS35425-68	WING NUT..... UOC:AVY,A11,A13,A14,A15,A20,A24,A25, A26,A27,B16,B17,B18,HVY,H11,H13,H14, H15,H16,H17,H18,H20,H21,H24,H25,H26, H27,H28,MMM	1

END OF FIGURE

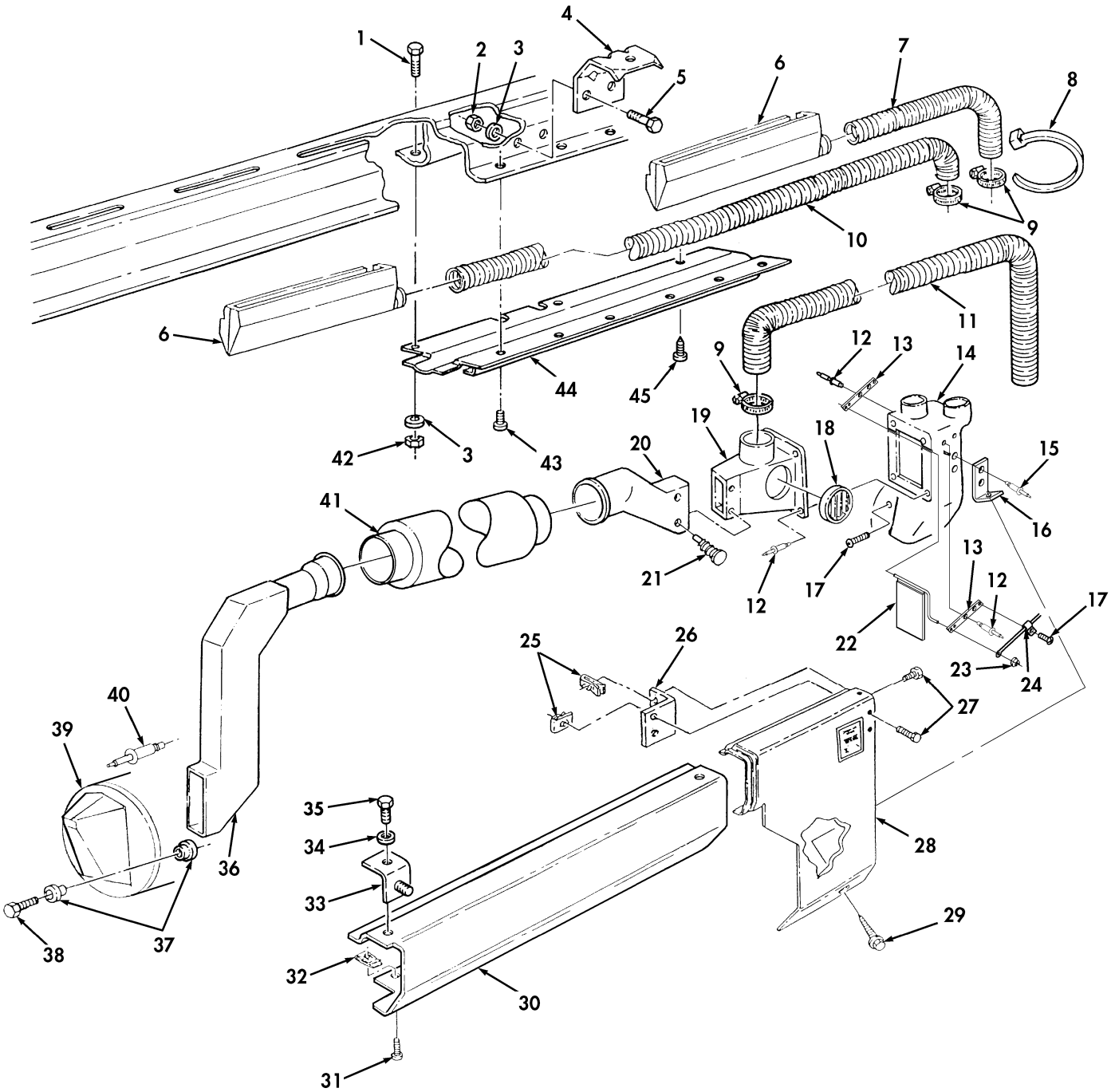

Figure 332. A2 Diverter Assembly, Defroster, Heater Ducting, and Radio Brackets.

(1) ITEM NO	(2) SMR CODE	(3) NSN	(4) CAGEC	(5) PART NUMBER	(6) DESCRIPTION AND USABLE ON CODES(UOC)	(7) QTY
					GROUP 2202 ACCESSORY ITEMS	
					FIG. 332 A2 DIVERTER ASSEMBLY, DEFROSTER,HEATER DUCTING,AND RADIO BRACKETS	
1	PAOZZ	5306012707332	34623	5594178	BOLT,MACHINE 1/4-20 X 7/8..... UOC:BVY,B15,B20,B24,B25,C17,NNN	3
2	PAOZZ	5310014326727	24617	9419471	NUT,SELF-LOCKING,HE 1/4..... UOC:BVY,B15,B20,B24,B25,C17,NNN	4
3	PAOZZ	5310011023270	24617	2436161	WASHER,FLAT 1/4..... UOC:BVY,B15,B20,B24,B25,C17,NNN	7
4	PFOZZ	5340014764374	19207	12446765	BRACKET,DOUBLE ANGL..... UOC:BVY,B15,B20,B24,B25,C17,NNN	2
5	PAOZZ	5305000680508	80204	B1821BH025C075N	SCREW,CAP,HEXAGON H 1/4-20 X 3/4... UOC:BVY,B15,B20,B24,B25,C17,NNN	4
6	PAOZZ	2910011845498	34623	12339292-1	NOZZLE,DEFROSTER R.H. AND L.H..... UOC:BVY,B15,B20,B24,B25,C17,NNN	2
7	PAOZZ	4720014749148	19207	12447010-1	HOSE,AIRDUCT..... UOC:BVY,B15,B20,B24,B25,C17,NNN	1
8	PAOZZ	5975010345871	96906	MS3367-7-0	STRAP,TIEDOWN,ELECT..... UOC:BVY,B15,B20,B24,B25,C17,NNN	1
9	PAOZZ	4730010921904	66295	SIZE 83	CLAMP,HOSE..... UOC:BVY,B15,B20,B24,B25,C17,NNN	3
10	PAOZZ	4720014455690	19207	12447010-3	HOSE,AIR DUCT..... UOC:BVY,B15,B20,B24,B25,C17,NNN	1
11	PAOZZ	4720014446433	34623	12447010-2	HOSE,AIR DUCT..... UOC:BVY,B15,B20,B24,B25,C17,NNN	1
12	PAOZZ	5320012751998	11815	BAPKTR-64	RIVET,BLIND..... UOC:BVY,B15,B20,B24,B25,C17,NNN	8
13	PAOZZ	2590014559123	19207	12460233	BRACKET,VEHICULAR C..... UOC:BVY,B15,B20,B24,B25,C17,NNN	2
14	PAOZZ	2540014472236	34623	12447046	DUCT ASSEMBLY,AIR C..... UOC:BVY,B15,B20,B24,B25,C17,NNN	1
15	PAOZZ	5320000835009	81349	M24243/1-A403	RIVET,BLIND..... UOC:BVY,B15,B20,B24,B25,C17,NNN	2
16	PAOZZ	5340014497352	19207	12447132	BRACKET,ANGLE..... UOC:BVY,B15,B20,B24,B25,C17,NNN	1
17	PAOZZ	5305012135024	86403	9414722	SCREW..... UOC:BVY,B15,B20,B24,B25,C17,NNN	2
18	PAOZZ	2540014559308	19207	12460434	VENTILATOR,AIR CIRC..... UOC:BVY,B15,B20,B24,B25,C17,NNN	1
19	PFOZZ	2540014446615	34623	12447130	DUCT ASSEMBLY,AIR C..... UOC:BVY,B15,B20,B24,B25,C17,NNN	1
20	PAOZZ	2540014445340	34623	12447050	HOUSING,AIR INTAKE,..... UOC:BVY,B15,B20,B24,B25,C17,NNN	1
21	PAOZZ	5325011973460	02768	354-280308-00-00 78	FASTENER,SPRING TEN..... UOC:BVY,B15,B20,B24,B25,C17,NNN	2
22	PAOZZ	2540014446655	34623	12447048	DUCT ASSEMBLY,AIR C..... UOC:BVY,B15,B20,B24,B25,C17,NNN	1
23	PAOZZ	5340013327599	19207	12340258	BUTTON,PLUG..... UOC:BVY,B15,B20,B24,B25,C17,NNN	1
24	PAOZZ	5340009907610	96906	MS21333-66	CLAMP,LOOP.....	1

(1) ITEM NO	(2) SMR CODE	(3) NSN	(4) CAGEC	(5) PART NUMBER	(6) DESCRIPTION AND USABLE ON CODES(UOC)	(7) QTY
					UOC:BVY,B15,B20,B24,B25,C17,NNN	
25	PAOZZ	5310012155356	19207	12339694	NUT,SHEET SPRING.....	4
					UOC:BVY,B15,B20,B24,B25,C17,NNN	
26	PAOZZ	5340011897554	19207	12339261	BRACKET,ANGLE.....	1
					UOC:BVY,B15,B20,B24,B25,C17,NNN	
27	PAOZZ	5305011878757	7X677	274707	SCREW,MACHINE 24 X 1/2.....	4
					UOC:BVY,B15,B20,B24,B25,C17,NNN	
28	PAOZZ	5340014702069	19207	12447013	COVER,ACCESS.....	1
					UOC:BVY,B15,B20,B24,B25,C17,NNN	
29	PAOZZ	5305012596322	34623	12342499-1	SCREW,MACHINE #10 32 X 1/2.....	1
					UOC:BVY,B15,B20,B24,B25,C17,NNN	
30	PAOZZ	2540014446642	34623	12447012	DUCT ASSEMBLY,AIR C.....	1
					UOC:BVY,B15,B20,B24,B25,C17,NNN	
31	PAOZZ	5305014479227	24617	9414726	SCREW,TAPPING.....	10
					UOC:BVY,B15,B20,B24,B25,C17,NNN	
32	PAOZZ	5310014483219	19207	12339426	NUT,SHEET SPRING.....	10
					UOC:BVY,B15,B20,B24,B25,C17,NNN	
33	PAOZZ	2590014398268	34623	12446763	BRACKET,VEHICULAR C.....	2
					UOC:BVY,B15,B20,B24,B25,C17,NNN	
34	PAOZZ	5310000806004	96906	MS27183-14	WASHER,FLAT.....	2
					UOC:BVY,B15,B20,B24,B25,C17,NNN	
35	PAOZZ	5305005434372	80204	B1821BH038C075N	SCREW,CAP,HEXAGON H 3/8-16 X 3/4...	2
					UOC:BVY,B15,B20,B24,B25,C17,NNN	
36	PAOZZ	2540014748562	19207	12447047	HOUSING,HEATING DIR.....	1
					UOC:BVY,B15,B20,B24,B25,C17,NNN	
37	PAOZZ	5365014696343	19207	12460385	SPACER,SLEEVE.....	6
					UOC:BVY,B15,B20,B24,B25,C17,NNN	
38	PAOZZ	5305014614396	3M915	9425170	SCREW,TAPPING #10-24 X 1.00.....	3
					UOC:BVY,B15,B20,B24,B25,C17,NNN	
39	PAOZZ	2540014633097	34623	12460386	DUCT ASSEMBLY,AIR C.....	1
					UOC:BVY,B15,B20,B24,B25,C17,NNN	
40	PAOZZ	5320012542283	11815	BALM-6BP-14	RIVET.....	1
					UOC:BVY,B15,B20,B24,B25,C17,NNN	
41	PAOZZ	4720014455705	19207	12447028	HOSE,AIR DUCT.....	1
					UOC:BVY,B15,B20,B24,B25,C17,NNN	
42	PAOZZ	5310000614650	96906	MS51943-31	NUT,SELF-LOCKING,HE 1/4-20.....	3
					UOC:BVY,B15,B20,B24,B25,C17,NNN	
43	PAOZZ	5305012553588	7X677	164830	SCREW,TAPPING 3/8-16 X 1/2.....	6
					UOC:BVY,B15,B20,B24,B25,C17,NNN	
44	PFOZZ	2510013070152	19207	12339201-1	PANEL,BODY,VEHICULA.....	1
					UOC:BVY,B15,B20,B24,B25,C17,NNN	
45	PAOZZ	5305012982436	96906	MS51861-22C	SCREW,TAPPING 6-20 X 1/4.....	2
					UOC:BVY,B15,B20,B24,B25,C17,NNN	

END OF FIGURE

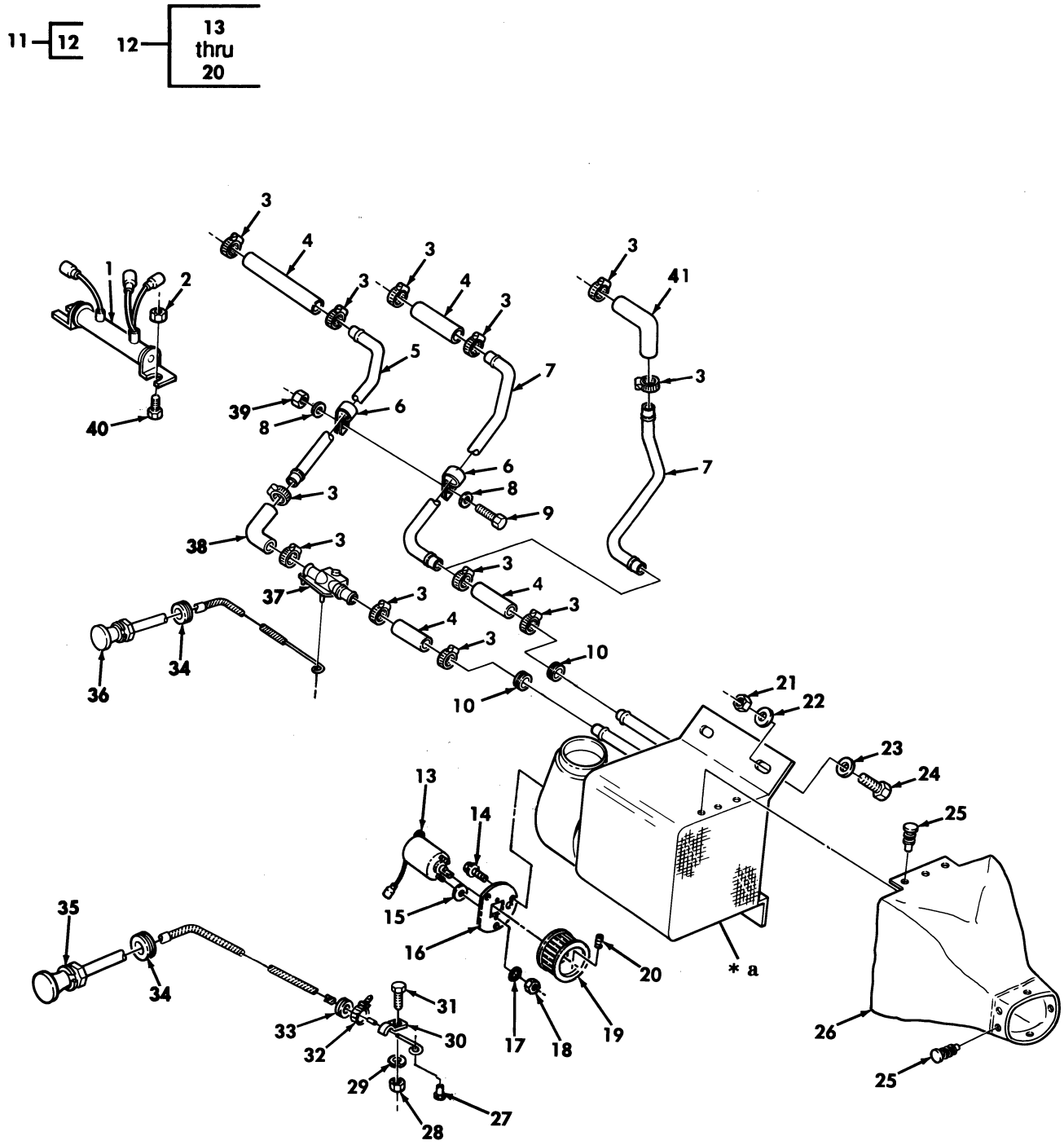

* a PART OF ITEM 11

Figure 333. Heater Assembly, Water Valve, and Controls.

(1) ITEM NO	(2) SMR CODE	(3) NSN	(4) CAGEC	(5) PART NUMBER	(6) DESCRIPTION AND USABLE ON CODES(UOC)	(7) QTY
					GROUP 2202 ACCESSORY ITEMS	
					FIG. 333 HEATER ASSEMBLY,WATER VALVE,AND CONTROLS	
1	PAOZZ	5905011839636	19207	12338468	RESISTOR,FIXED,WIRE.....	1
2	PAOZZ	5310012510711	34623	5593038	NUT,PLAIN,HEXAGON 1/4-20.....	2
3	PAOZZ	4730010887798	76599	481655-305	CLAMP,HOSE.....	10
* 4	MFOZZ		19207	12339293-1	TUBE,BENT,NONMETALL MAKE FROM HOSE, P/N MS521301A203R,2.5 INCHES LONG...	4
5	PAOZZ	4710012103504	19207	12339263	TUBE,BENT,METALLIC.....	1
6	PFOZZ	5340012143615	21450	137197	CLAMP,LOOP.....	2
* 7	PAOZZ	4720014732352	34623	RCSK18121	TUBE,BENT,METALLIC..... UOC:BVY,B15,B20,B24,B25,C17,NNN	1
* 7	PAOZZ	4710014886076	34623	12469479	TUBE,BENT,METALLIC (SERIAL NUMBER 196901 AND ABOVE)..... UOC:BVY,B15,B20,B24,B25,C17,NNN	1
* 7	PAOZZ	4710012103503	34623	5590284	TUBE,BENT,METALLIC..... UOC:AVY,A11,A13,A14,A15,A20,A24,A25, A26,A27,B16,B17,B18,HVY,H11,H13,H14, H15,H16,H17,H18,H20,H21,H24,H25,H26, H27,H28,MMM	1
8	PAOZZ	5310011023270	24617	2436161	WASHER,FLAT 1/4.....	2
9	PAOZZ	5305000680502	96906	MS90725-6	SCREW,CAP,HEXAGON H 1/4-20 X 3/4...	1
10	PAOZZ	5325002811557	70485	AN931-10-14	GROMMET,NONMETALLIC.....	2
* 11	PFOOO	2540011907079	92878	30250	HEATER,VEHICULAR,CO..... UOC:AVY,A11,A13,A14,A15,A20,A24,A25, A26,A27,B16,B17,B18,HVY,H11,H13,H14, H15,H16,H17,H18,H20,H21,H24,H25,H26, H27,H28,MMM	1
* 11	PFOOO	2540014743217	19207	12447007	HEATER,VEHICULAR,CO..... UOC:BVY,B15,B20,B24,B25,C17,NNN	1
12	PAOOO	6105012116635	92878	30266	.MOTOR,DIRECT CURREN.....	1
* 13	PAOZZ	6105014635260	92878	30042	..MOTOR,DIRECT CURREN.....	1
14	PAOZZ	5305013809163	24617	9414313	..SCREW,ASSEMBLED WAS 1/4-20 X 11/ 32.....	2
15	PAOZZ	5310000145850	96906	MS27183-42	..WASHER,FLAT #10.....	2
16	PFOZZ	5340013812248	19207	12342809	..PLATE,MOUNTING.....	1
17	PAOZZ	5310005765752	96906	MS35333-39	..WASHER,LOCK #10.....	2
18	PAOZZ	5310009349751	96906	MS35650-302	..NUT,PLAIN,HEXAGON #10-32.....	2
19	PAOZZ	2930013859108	19207	12342808	..IMPELLER,FAN,AXIAL.....	1
20	PAOZZ	5305007245812	80205	MS51964-65	..SETSCREW 1/4-28 X .312.....	1
21	PAOZZ	5310008140673	96906	MS51943-33	NUT,SELF-LOCKING,HE 5/16-18.....	4
* 22	PAOZZ	5310011191024	24617	2436162	WASHER,FLAT 5/16.....	4
23	PAOZZ	5310000814219	96906	MS27183-12	WASHER,FLAT 5/16.....	4
24	PAOZZ	5306002258499	96906	MS90725-34	BOLT,MACHINE 5/16-18 X 3/4.....	4
25	PFOZZ	5325012097843	19207	12339402	GROMMET,NONMETALLIC 1/4 X 5/8.....	16
26	PAOZZ	4720012126403	19207	12340029	DUCT,AIR INTAKE.....	1
27	PAOZZ	5310011981723	19207	12339998-14	NUT,PLAIN,BLIND RIV.....	1
28	PAOZZ	5310009349747	96906	MS35649-262	NUT,PLAIN,HEXAGON #6-32.....	1
29	PAOZZ	5310000454007	96906	MS35338-41	WASHER,LOCK #6.....	1
30	PAOZZ	5340012155478	75272	CWV-0407	CLAMP,LOOP.....	1
31	PAOZZ	5305002271543	96906	MS51849-33	SCREW,MACHINE #6-32 X .62.....	1

(1) ITEM NO	(2) SMR CODE	(3) NSN	(4) CAGEC	(5) PART NUMBER	(6) DESCRIPTION AND USABLE ON CODES(UOC)	(7) QTY
* 32	PAOZZ	5975010345871	96906	MS3367-7-0	STRAP,TIEDOWN,ELECT.....	1
33	PAOZZ	5325002496345	70485	2758	GROMMET,NONMETALLIC.....	1
34	PAOZZ	5325002919366	96906	MS35489-11	GROMMET,NONMETALLIC.....	2
35	PAOZZ	2590011946990	19207	12340531-3	CONTROL ASSEMBLY,PU DEFROSTER.....	1
36	PAOZZ	2590012124956	19207	12340531-4	CONTROL ASSEMBLY,PU HEATER.....	1
37	PAOZZ	4820011892107	58261	RTCO-2619	VALVE,STOP-CHECK.....	1
38	PAOZZ	4720011892218	19207	12339251	HOSE,PREFORMED.....	1
39	PAOZZ	5310000614650	96906	MS51943-31	NUT,SELF-LOCKING,HE 1/4-20.....	1
40	PAOZZ	5305012685680	34623	5593030	SCREW,ASSEMBLED WAS 1/4-20 X 5/8...	2
* 41	PAOZZ	4730014886163	34623	12469491	ELBOW,HOSE (SERIAL NUMBER 196901 AND ABOVE).....	1

END OF FIGURE

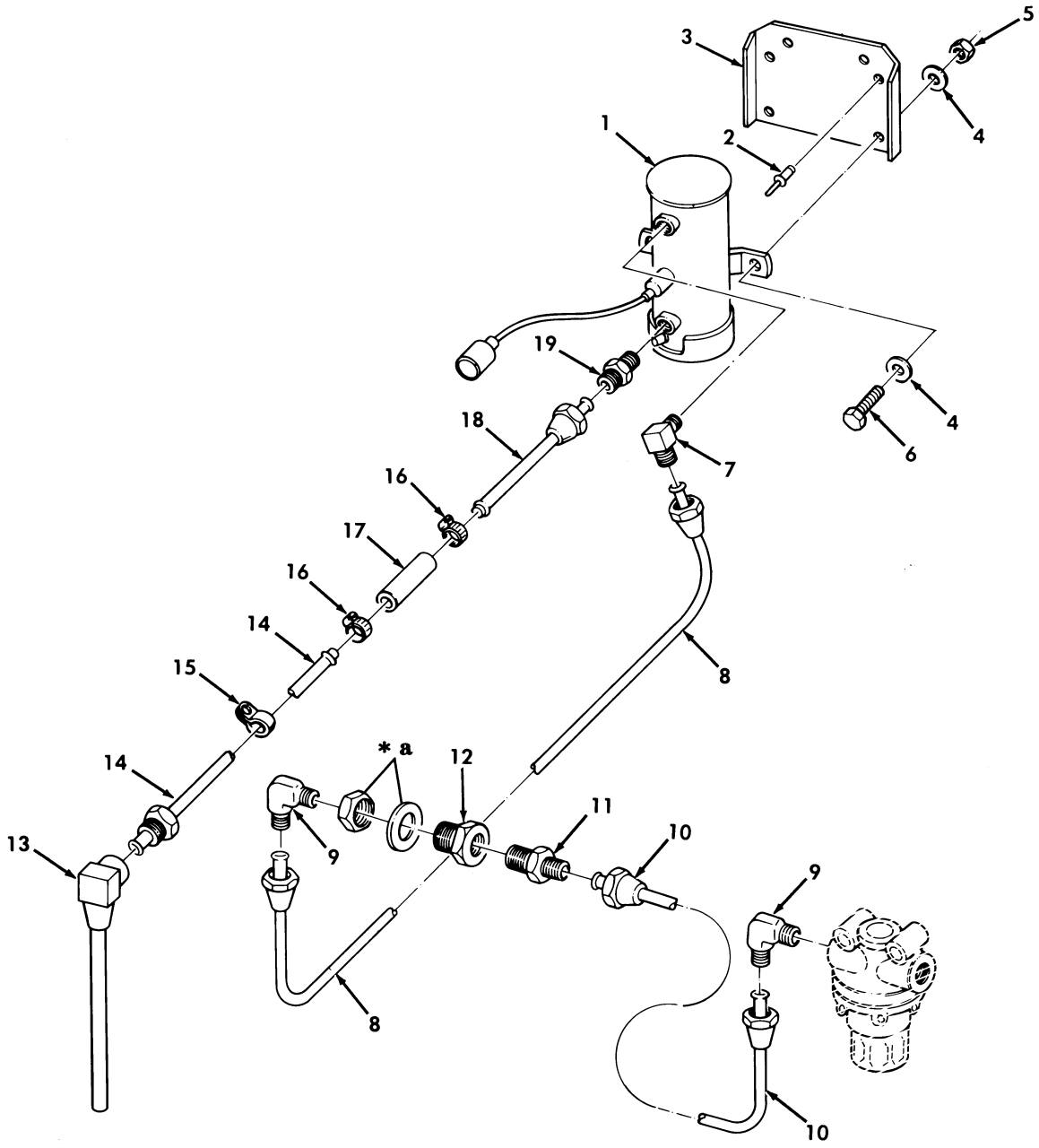

* a PART OF ITEM 12

Figure 334. Heater Fuel Lines, Filter to Tank, M996, M996A1, M997, M997A1, and M997A2 Ambulance.

(1) ITEM NO	(2) SMR CODE	(3) NSN	(4) CAGEC	(5) PART NUMBER	(6) DESCRIPTION AND USABLE ON CODES(UOC)	(7) QTY
					GROUP 2202 ACCESSORY ITEMS	
					FIG. 334 HEATER FUEL LINES,FILTER TO TANK,M996,M996A1,M997,M997A1,AND M997A2 AMBULANCE	
1	PAOZZ	2910000730165	19207	7748814	PUMP,FUEL,ELECTRICA..... UOC:A15,B15,B16,H15,H16	1
2	PAOZZ	5320012716357	9K475	MGLP-B6-4	RIVET,BLIND 3/16..... UOC:A15,B15,B16,H15,H16	4
3	PFOZZ	5340012043903	19207	12338559	BRACKET,DOUBLE ANGL..... UOC:A15,B15,B16,H15,H16	1
4	PAOZZ	5310012510748	34623	5593691	WASHER,FLAT 1/4..... UOC:A15,B15,B16,H15,H16	4
5	PAOZZ	5310000614650	96906	MS51943-31	NUT,SELF-LOCKING,HE 1/4 X 20..... UOC:A15,B15,B16,H15,H16	2
6	PAOZZ	5305002253843	80204	B1821BH025C100N	SCREW,CAP,HEXAGON H 1/4-20 X 1.00.. UOC:A15,B15,B16,H15,H16	2
7	PAOZZ	4730002546227	79470	49X6X2	ELBOW,PIPE TO TUBE..... UOC:A15,B15,B16,H15,H16	1
8	PAOZZ	4710012653231	34623	5591614	TUBE ASSEMBLY,METAL..... UOC:A15,B15,B16,H15,H16	1
9	PAOZZ	4730002546211	30327	E14A	ELBOW,PIPE TO TUBE 90 DEGREE..... UOC:A15,B15,B16,H15,H16	2
10	PAOZZ	4710012653275	19207	12341440	TUBE ASSEMBLY,METAL..... UOC:A15,B15,B16,H15,H16	1
11	PAOZZ	4730008036266	72582	8924145	ADAPTER,STRAIGHT,PI..... UOC:A15,B15,B16,H15,H16	1
12	PAOZZ	4730008975497	79470	W21204	COUPLING,PIPE..... UOC:A15,B15,B16,H15,H16	1
13	PAOZZ	4710012030615	34623	5578694	TUBE ASSEMBLY,METAL..... UOC:A15,B15,B16,H15,H16	1
14	PAOZZ	4710012030607	34623	5588694	TUBE ASSEMBLY,METAL..... UOC:A15,B15,B16,H15,H16	1
15	PAOZZ	5340009936207	96906	MS21333-99	CLAMP,LOOP..... UOC:A15,B15,B16,H15,H16	1
16	PAOZZ	4730011188278	76599	MMF4-SS	CLAMP,HOSE..... UOC:A15,B15,B16,H15,H16	2
* 17	MOOZZ		34623	5588698	HOSE MAKE FROM HOSE,P/N 9438315, 2.80 INCHES LONG..... UOC:A15,B15,B16,H15,H16	1
18	PAOZZ	4710012030608	34623	5588696	TUBE ASSEMBLY,METAL..... UOC:A15,B15,B16,H15,H16	1
19	PAOZZ	4730002660535	81343	5-2 010102B	ADAPTER,STRAIGHT,PI..... UOC:A15,B15,B16,H15,H16	1

END OF FIGURE

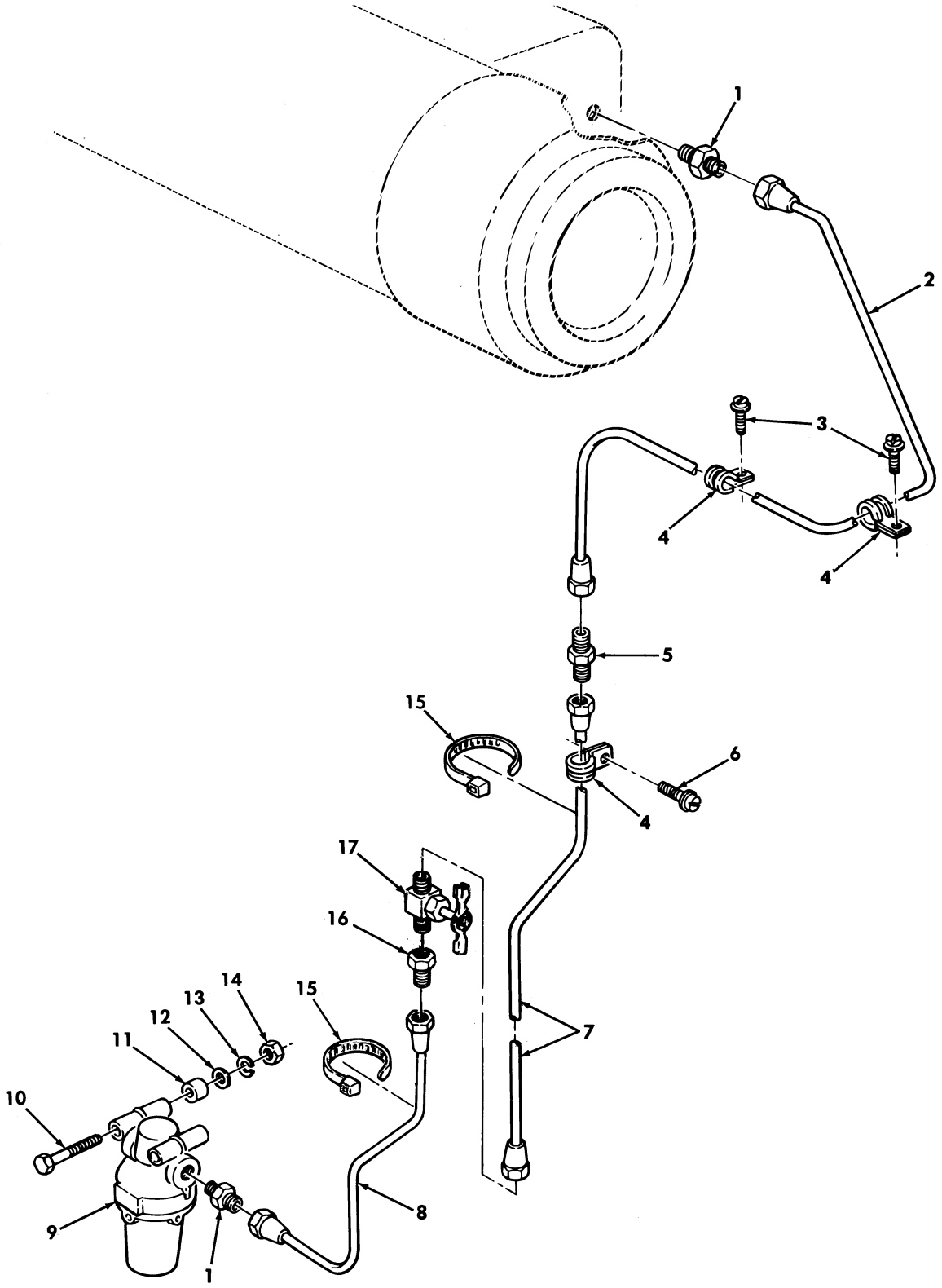

Figure 335. Fuel Lines, Personnel Heater to Fuel Filter, M996 and M996A1 Ambulance.

(1) ITEM NO	(2) SMR CODE	(3) NSN	(4) CAGEC	(5) PART NUMBER	(6) DESCRIPTION AND USABLE ON CODES(UOC)	(7) QTY
					GROUP 2202 ACCESSORY ITEMS	
					FIG. 335 FUEL LINES,PERSONNEL HEATER TO FUEL FILTER,M996 AND M996A1 AMBULANCE	
1	PAOZZ	4730004396021	81343	6-2 010102B	ADAPTER,STRAIGHT,PI..... UOC:B16,H16	2
2	PAOZZ	4710012653228	34623	5598266	TUBE ASSEMBLY,METAL..... UOC:B16,H16	1
3	PAOZZ	5305012596322	34623	12342499-1	SCREW,MACHINE #10-32 X .50..... UOC:B16,H16	2
4	PAOZZ	5340007647051	96906	MS21333-69	CLAMP,LOOP..... UOC:B16,H16	3
5	PAOZZ	4730009498694	41947	A-327	NIPPLE,TUBE..... UOC:B16,H16	1
6	PAOZZ	5305012046502	78189	112-1008800-003	SCREW #10-32 X .62..... UOC:B16,H16	1
7	PAOZZ	4710012653229	34623	12341420	TUBE ASSEMBLY,METAL..... UOC:B16,H16	1
8	PAOZZ	4710012653228	34623	5598266	TUBE ASSEMBLY,METAL..... UOC:B16,H16	1
9	PAOZZ	2910000253493	96906	MS51085-1	FILTER,FLUID..... UOC:B16,H16	1
10	PAOZZ	5305012705435	34623	5593421	SCREW,CAP,HEXAGON H #10-24 X 2.00.. UOC:B16,H16	2
11	PFOZZ	5365012727504	34623	5596814	SPACER,SLEEVE..... UOC:B16,H16	2
12	PAOZZ	5310012538953	34623	5593242	WASHER,FLAT #10..... UOC:B16,H16	2
13	PAOZZ	5310000453296	96906	MS35338-43	WASHER,LOCK #10..... UOC:B16,H16	2
14	PAOZZ	5310009349758	96906	MS35649-202	NUT,PLAIN,HEXAGON #10-24..... UOC:B16,H16	2
15	PAOZZ	5975009856630	96906	MS3367-3-0	STRAP,TIEDOWN,ELECT..... UOC:B16,H16	2
16	PAOZZ	4730002704606	81343	6-4 010103B	ADAPTER,STRAIGHT,PI..... UOC:B16,H16	1
17	PAOZZ	4820002875627	19207	12341793	COCK,SHUTOFF,SCREW..... UOC:B16,H16	1

END OF FIGURE

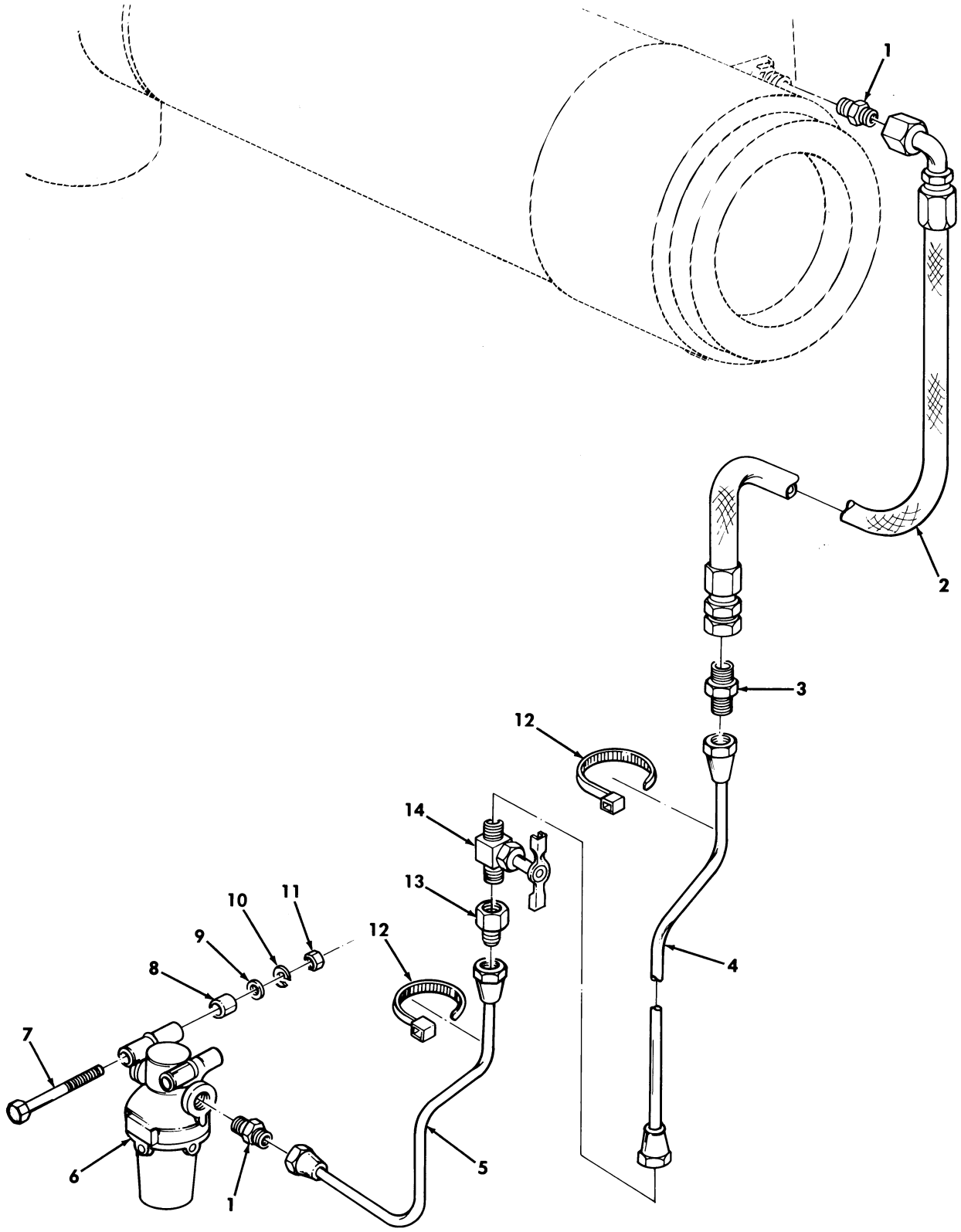

Figure 336. Fuel Lines, Personnel Heater to Fuel Filter, M997, M997A1, and M997A2 Ambulance.

(1) ITEM NO	(2) SMR CODE	(3) NSN	(4) CAGEC	(5) PART NUMBER	(6) DESCRIPTION AND USABLE ON CODES(UOC)	(7) QTY
					GROUP 2202 ACCESSORY ITEMS	
					FIG. 336 FUEL LINES,PERSONNEL HEATER TO FUEL FILTER,M997,M997A1,AND M997A2 AMBULANCE	
1	PAOZZ	4730012699530	24617	190652	ADAPTER,STRAIGHT,PI..... UOC:A15,B15,H15	2
2	PAOZZ	4720012653213	24234	403475	HOSE ASSEMBLY,METAL..... UOC:A15,B15,H15	1
3	PAOZZ	4730009498694	41947	A-327	NIPPLE,TUBE 3/8..... UOC:A15,B15,H15	1
4	PAOZZ	4710012653229	34623	12341420	TUBE ASSEMBLY,METAL..... UOC:A15,B15,H15	1
5	PAOZZ	4710012653228	34623	5598266	TUBE ASSEMBLY,METAL..... UOC:A15,B15,H15	1
6	PAOZZ	2910000253493	96906	MS51085-1	FILTER,FLUID..... UOC:A15,B15,H15	1
7	PAOZZ	5305012705435	34623	5593421	SCREW,CAP,HEXAGON H #10-24 X 2.00.. UOC:A15,B15,H15	2
8	PAOZZ	5365012727504	34623	5596814	SPACER,SLEEVE..... UOC:A15,B15,H15	2
9	PAOZZ	5310012538953	34623	5593242	WASHER,FLAT #10..... UOC:A15,B15,H15	2
10	PAOZZ	5310000453296	96906	MS35338-43	WASHER,LOCK #10..... UOC:A15,B15,H15	2
11	PAOZZ	5310009349758	96906	MS35649-202	NUT,PLAIN,HEXAGON #10-24..... UOC:A15,B15,H15	2
12	PAOZZ	5975009856630	96906	MS3367-3-0	STRAP,TIEDOWN,ELECT..... UOC:A15,B15,H15	4
13	PAOZZ	4730002704606	81343	6-4 010103B	ADAPTER,STRAIGHT,PI..... UOC:A15,B15,H15	1
14	PAOZZ	4820002875627	34623	5598272	COCK,SHUTOFF,SCREW..... UOC:A15,B15,H15	1

END OF FIGURE

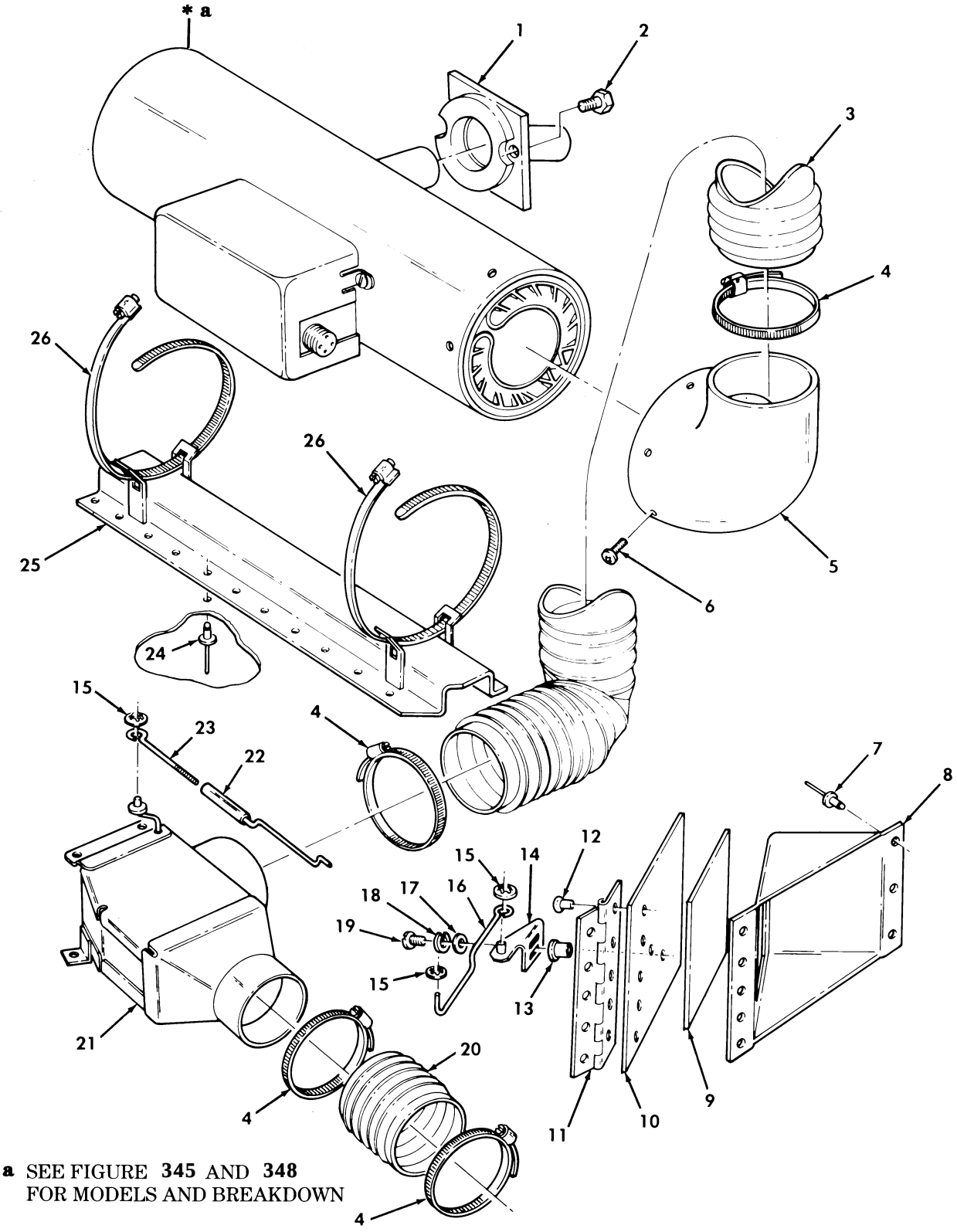

Figure 337. Personnel Heater Assembly and Attaching Hardware, M996 and M996A1 Ambulance.

(1) ITEM NO	(2) SMR CODE	(3) NSN	(4) CAGEC	(5) PART NUMBER	(6) DESCRIPTION AND USABLE ON CODES(UOC)	(7) QTY
					GROUP 2202 ACCESSORY ITEMS	
					FIG. 337 PERSONNEL HEATER ASSEMBLY AND ATTACHING HARDWARE,M996 AND M996A1 AMBULANCE	
1	PFOZZ	2990012696625	34623	5598002	SHIELD ASSEMBLY,HEA..... UOC:B16,H16	1
2	PAOZZ	5305005434709	28839	10-35936-7	SCREW,ASSEMBLED WAS..... UOC:B16,H16	2
3	XBOZZ		19207	12339265-12	TUBING,NONMETALLIC..... UOC:B16,H16	1
4	PAOZZ	4730012969318	19207	11608950-18	CLAMP,HOSE..... UOC:B16,H16	4
5	PFOZZ	4730012975111	19207	12341883	ELBOW,PIPE..... UOC:B16,H16	1
6	PAOZZ	5305009846195	96906	MS35206-247	SCREW,MACHINE..... UOC:B16,H16	3
7	PAOZZ	5320002758344	90030	AD45BS	RIVET,BLIND 1/8..... UOC:B16,H16	8
8	PFOZZ	2940012905014	34623	12341662	DEFLECTOR,AIR CLEAN..... UOC:B16,H16	1
9	PAOZZ	5330012902709	19207	12341657	GASKET..... UOC:B16,H16	1
10	PFOZZ	5340012893231	34623	5598253	COVER,ACCESS..... UOC:B16,H16	1
11	PFOZZ	5340012902761	34623	5598256-C	HINGE,BUTT..... UOC:B16,H16	1
12	PAOZZ	5320008990981	54402	AD42BS	RIVET,BLIND..... UOC:B16,H16	5
13	PAOZZ	5310010099785	96906	MS27130-20	NUT,PLAIN,BLIND RIV #10-32..... UOC:B16,H16	2
14	PAOZZ	5340012902263	34623	5598250-B	BRACKET,ANGLE..... UOC:B16,H16	1
15	PAOZZ	5310013270387	19207	12341800	WASHER,LOCK..... UOC:B16,H16	3
16	PFOZZ	3040012906758	34623	5598247	CONNECTING LINK,RIG..... UOC:B16,H16	1
17	PAOZZ	5310000145850	96906	MS27183-42	WASHER,FLAT #10..... UOC:B16,H16	2
18	PAOZZ	5310000453296	96906	MS35338-43	WASHER,LOCK #10..... UOC:B16,H16	2
19	PAOZZ	5305009897435	96906	MS35207-264	SCREW,MACHINE #10-32 X .625..... UOC:B16,H16	2
20	PFOZZ	4720012998469	16632	FLX400132057600	HOSE,AIR DUCT 4.50 INCHES LONG..... UOC:B16,H16	1
21	PFOZZ	2540012703776	19207	12341227	DIVERTER BOX,HEATER..... UOC:B16,H16	1
22	PFOZZ	3040012906757	34623	5598309	CONNECTING LINK,RIG..... UOC:B16,H16	1
23	PFOZZ	3040012906760	34623	5598310	CONNECTING LINK,RIG..... UOC:B16,H16	1
24	PAOZZ	5320012544251	34623	5593050	RIVET,BLIND.....	22

(1) ITEM NO	(2) SMR CODE	(3) NSN	(4) CAGEC	(5) PART NUMBER	(6) DESCRIPTION AND USABLE ON CODES(UOC)	(7) QTY
					UOC:B16,H16	
25	PFOZZ	5365012805875	34623	5597035	SPACER,PLATE.....	1
					UOC:B16,H16	
26	PAOZZ	4730009086294	76599	96HSS	CLAMP,HOSE.....	2
					UOC:B16,H16	

END OF FIGURE

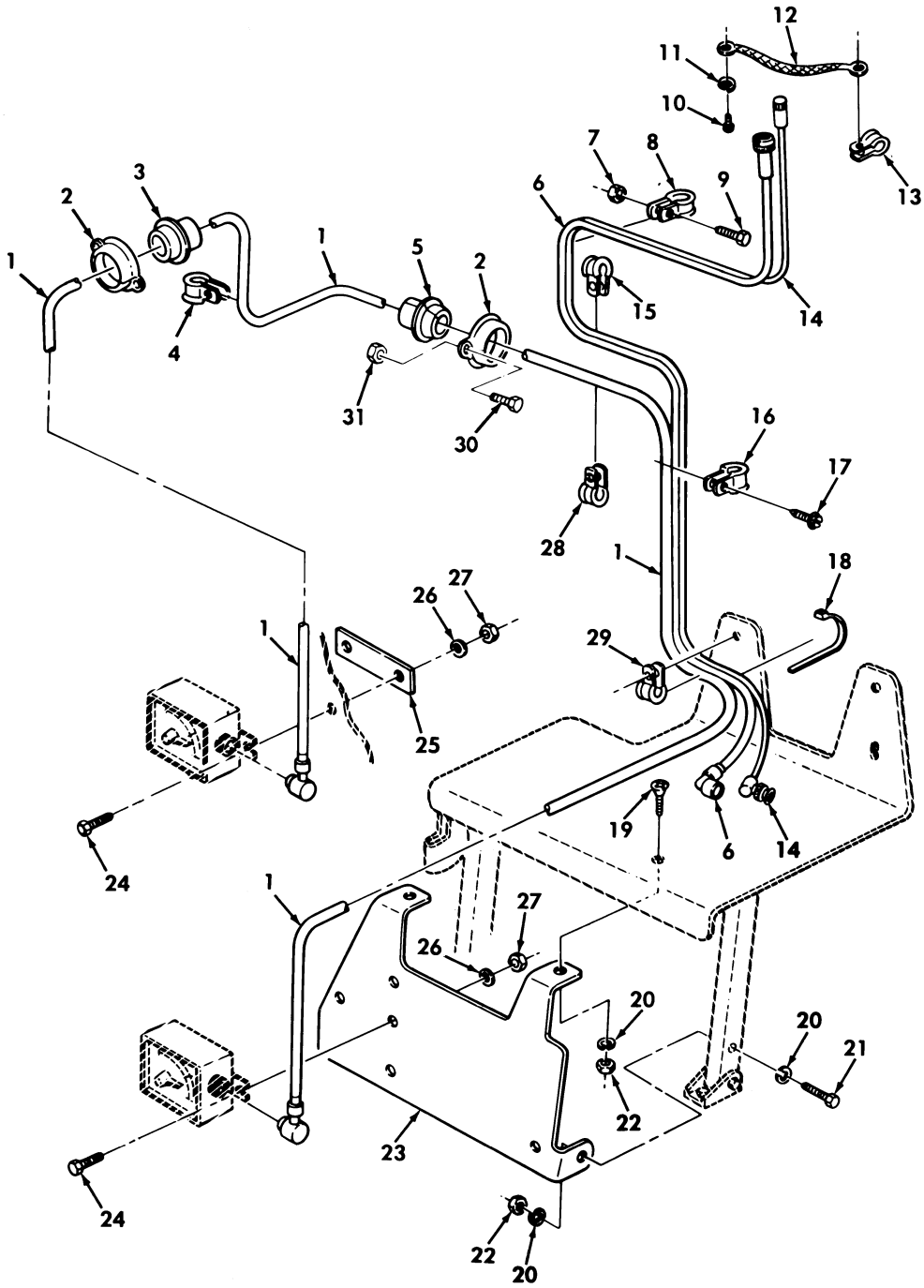

Figure 338. Antenna and Intercom Cables and Mounting Hardware, M997, M997A1, and M997A2 Ambulance.

(1) ITEM NO	(2) SMR CODE	(3) NSN	(4) CAGEC	(5) PART NUMBER	(6) DESCRIPTION AND USABLE ON CODES(UOC)	(7) QTY
					GROUP 2202 ACCESSORY ITEMS	
					FIG. 338 ANTENNA AND INTERCOM CABLES AND MOUNTING HARDWARE,M997,M997A1, AND M997A2 AMBULANCE	
1	PAOZZ	6150012691849	19207	12338100-2	CABLE ASSEMBLY,SPEC..... UOC:A15,B15,H15	1
2	PFOZZ	2590004543620	34623	809223	RETAINER,ASSEMBLY..... UOC:A15,B15,H15	2
3	PAOZZ	5365012734690	19207	12341231-1	BUSHING,NONMETALLIC..... UOC:A15,B15,H15	1
4	PAOZZ	5340009588457	96906	MS21333-78	CLAMP,LOOP..... UOC:A15,B15,H15	4
5	PAOZZ	5365012744674	19207	12341848	BUSHING,NONMETALLIC..... UOC:A15,B15,H15	1
6	PAOZZ	6150012691848	19207	12338089-2	CABLE ASSEMBLY,SPEC..... UOC:A15,B15,H15	1
* 7	PAOZZ	5310011520598	24617	271172	NUT,SELF-LOCKING,HE #10-32..... UOC:A15,B15,H15	1
8	PAOZZ	5340000572904	96906	MS21333-71	CLAMP,LOOP..... UOC:A15,B15,H15	1
9	PAOZZ	5305009897435	96906	MS35207-264	SCREW,MACHINE #10-32 X .62..... UOC:A15,B15,H15	1
10	PAOZZ	5305009897434	96906	MS35207-263	SCREW,MACHINE #10-32 X .50..... UOC:A15,B15,H15	1
11	PAOZZ	5310000453296	96906	MS35338-43	WASHER,LOCK #10..... UOC:A15,B15,H15	1
12	PAOZZ	5999012720018	34623	5598121	STRIP,ELECTRICAL GR..... UOC:A15,B15,H15	1
13	PAOZZ	5340009891771	96906	MS21333-123	CLAMP,LOOP..... UOC:A15,B15,H15	1
14	PAOZZ	5995012699525	19207	12338086-2	CABLE ASSEMBLY,RADI..... UOC:A15,B15,H15	1
15	PAOZZ	5340009848540	96906	MS21333-102	CLAMP,LOOP..... UOC:A15,B15,H15	1
16	PAOZZ	5340000502740	96906	MS21333-75	CLAMP,LOOP..... UOC:A15,B15,H15	3
17	PAOZZ	5305012596322	34623	12342499-1	SCREW,MACHINE #10-32 X 1/2..... UOC:A15,B15,H15	3
18	PAOZZ	5975009856630	96906	MS3367-3-0	STRAP,TIEDOWN,ELECT..... UOC:A15,B15,H15	2
19	PAOZZ	5305009585246	80205	MS35190-289	SCREW,MACHINE 1/4-20 X .75..... UOC:A15,B15,H15	2
20	PAOZZ	5310012510748	34623	5593691	WASHER,FLAT 1/4..... UOC:A15,B15,H15	6
21	PAOZZ	5305000712237	96906	MS90725-14	SCREW,CAP,HEXAGON H 1/4-20 X 2.00.. UOC:A15,B15,H15	2
22	PAOZZ	5310000614650	96906	MS51943-31	NUT,SELF-LOCKING,HE 1/4-20..... UOC:A15,B15,H15	4
23	PAOZZ	5340012708489	19207	12340879	BRACKET,MOUNTING..... UOC:A15,B15,H15	1
24	PAOZZ	5306002264835	80204	B1821BH031C250N	BOLT,MACHINE 5/16-18 X 2.50.....	4

(1) ITEM NO	(2) SMR CODE	(3) NSN	(4) CAGEC	(5) PART NUMBER	(6) DESCRIPTION AND USABLE ON CODES(UOC)	(7) QTY
					UOC:A15,B15,H15	
* 25	PAOZZ	5365012805875	34623	5597035	SPACER,PLATE.....	1
					UOC:A15,B15,H15	
* 26	PAOZZ	5310011191024	24617	2436162	WASHER,FLAT 5/16.....	2
					UOC:A15,B15,H15	
* 27	PAOZZ	5310008140673	96906	MS51943-33	NUT,SELF-LOCKING,HE 5/16-18.....	2
					UOC:A15,B15,H15	
28	PAOZZ	5340009226300	96906	MS21333-77	CLAMP,LOOP.....	3
					UOC:A15,B15,H15	
29	PAOZZ	5340008091494	96906	MS21333-105	CLAMP,LOOP.....	2
					UOC:A15,B15,H15	
* 30	PAOZZ	5305000680502	96906	MS90725-6	SCREW,CAP,HEXAGON.....	2
					UOC:A15,B15,H15	
* 31	PAOZZ	5310011520598	24617	271172	NUT,SELF-LOCKING.....	2
					UOC:A15,B15,H15	

END OF FIGURE

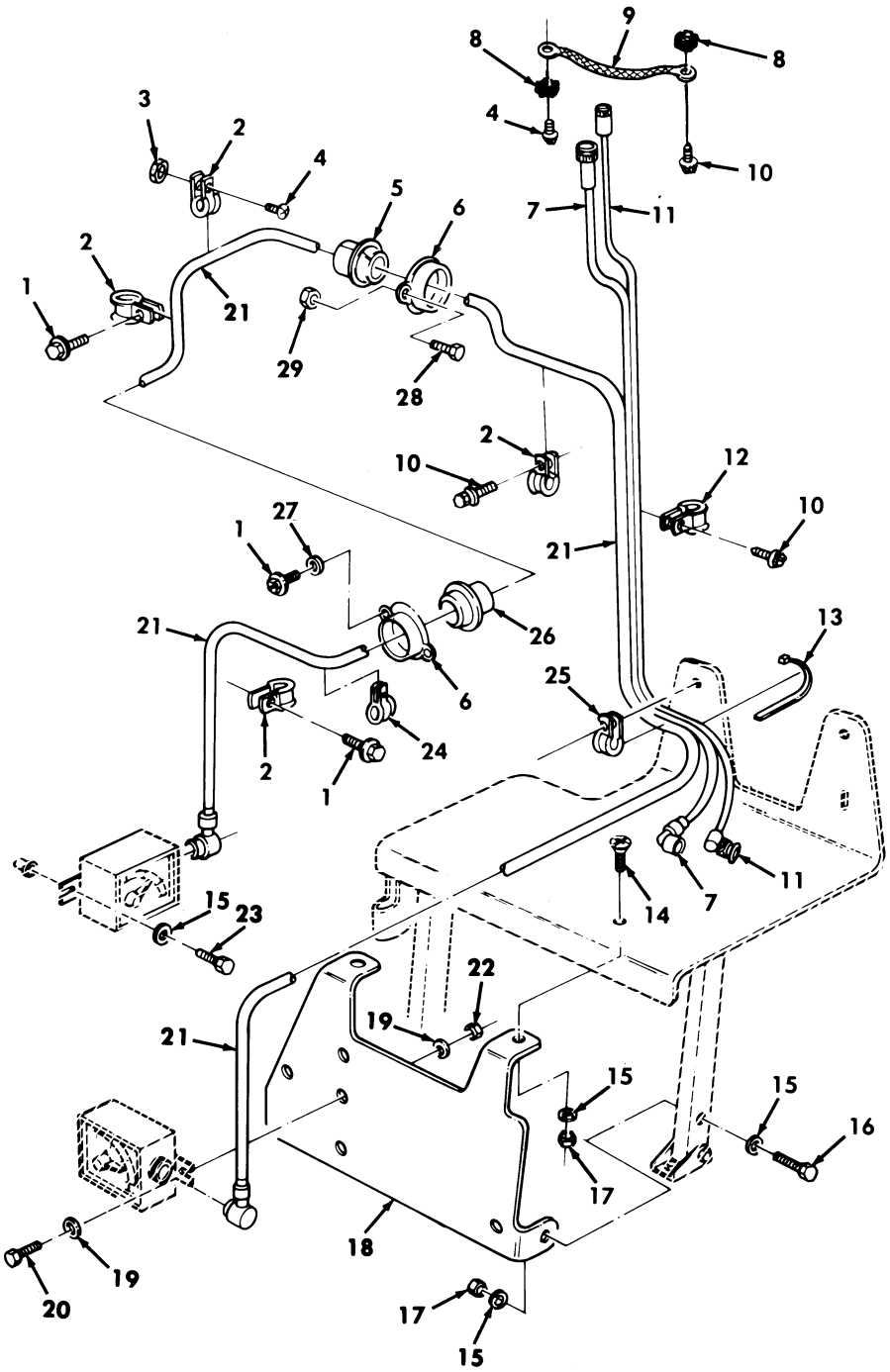

Figure 339. Antenna and Intercom Cables and Mounting Hardware, M996 and M996A1 Ambulance.

(1) ITEM NO	(2) SMR CODE	(3) NSN	(4) CAGEC	(5) PART NUMBER	(6) DESCRIPTION AND USABLE ON CODES(UOC)	(7) QTY
					GROUP 2202 ACCESSORY ITEMS	
					FIG. 339 ANTENNA AND INTERCOM CABLES AND MOUNTING HARDWARE,M996 AND M996A1 AMBULANCE	
1	PAOZZ	5305012729042	34623	5593409	SCREW,CAP,HEXAGON H 1/4-20 X 1.25.. UOC:B16,H16	6
2	PAOZZ	5340000572904	96906	MS21333-71	CLAMP,LOOP..... UOC:B16,H16	8
3	PAOZZ	5310012708189	24617	271168	NUT PLAIN,ASSEMBLED #10-32..... UOC:B16,H16	2
4	PAOZZ	5305000593659	96906	MS51958-63	SCREW,MACHINE #10-32 X .50..... UOC:B16,H16	3
5	PAOZZ	5325012055378	19207	12338084	GROMMET..... UOC:B16,H16	1
6	PFOZZ	2590004543620	34623	809223	RETAINER,ASSEMBLY..... UOC:B15,H15	2
7	PAOZZ	6150012691848	19207	12338089-2	CABLE ASSEMBLY,SPEC..... UOC:B16,H16	1
8	PAOZZ	5310000809786	96906	MS45904-60	WASHER,LOCK #10..... UOC:B16,H16	2
9	PAOZZ	5999012720018	34623	5598121	STRIP,ELECTRICAL GR..... UOC:B16,H15,H16	1
10	PAOZZ	5305012596322	34623	12342499-1	SCREW,MACHINE #10-32 X 3/4..... UOC:B16,H16	6
11	PAOZZ	5995012699525	34623	5589012-B	CABLE ASSEMBLY,RADI..... UOC:B16,H16	1
12	PAOZZ	5340000502740	96906	MS21333-75	CLAMP,LOOP..... UOC:B16,H16	3
* 13	PAOZZ	5975010345871	96906	MS3367-7-0	STRAP,TIEDOWN,ELECT..... UOC:B16,H16	2
14	PAOZZ	5305007195021	96906	MS51959-81	SCREW,MACHINE 1/4-20 X .75..... UOC:B16,H16	2
15	PAOZZ	5310012510748	34623	5593691	WASHER,FLAT 1/4..... UOC:B16,H16	8
16	PAOZZ	5305000712237	96906	MS90725-14	SCREW,CAP,HEXAGON H 1/4-20 X 2.00.. UOC:B16,H16	2
17	PAOZZ	5310000614650	96906	MS51943-31	NUT,SELF-LOCKING,HE 1/4-20..... UOC:B16,H16	4
18	PFOZZ	5340012708489	19207	12340879	BRACKET,MOUNTING..... UOC:B16,H16	1
* 19	PAOZZ	5310011191024	24617	2436162	WASHER,FLAT 5/16..... UOC:B16,H16	4
20	PAOZZ	5306002258499	96906	MS90725-34	BOLT,MACHINE 5/16-18 X 1.00..... UOC:B16,H16	2
21	PAOZZ	6150012691839	19207	12338100-1	CABLE ASSEMBLY,SPEC..... UOC:B16,H16	1
22	PAOZZ	5310008140673	96906	MS51943-33	NUT,SELF-LOCKING,HE 5/16-18..... UOC:B16,H16	2
23	PAOZZ	5305012729034	34623	G0045696	SCREW,ASSEMBLED WAS 1/4-20 X 1.25.. UOC:B16,H16	2
24	PAOZZ	5340009848540	96906	MS21333-102	CLAMP,LOOP.....	1

(1) ITEM NO	(2) SMR CODE	(3) NSN	(4) CAGEC	(5) PART NUMBER	(6) DESCRIPTION AND USABLE ON CODES(UOC)	(7) QTY
					UOC:B16,H16	
25	PAOZZ	5340008091494	96906	MS21333-105	CLAMP,LOOP.....	2
					UOC:B16,H16	
26	PAOZZ	5365012743573	19207	12341231-3	BUSHING,NONMETALLIC.....	1
					UOC:B16,H16	
27	PAOZZ	5310000145850	96906	MS27183-42	WASHER,FLAT #10.....	2
					UOC:B16,H16	
* 28	PAOZZ	5305000680502	96906	MS90725-6	SCREW,CAP,HEXAGON H 1/4-20 X 0.75..	2
					UOC:B16,H16	
* 29	PAOZZ	5310011520598	24617	271172	NUT,SELF-LOCKING,AS 1/4-20.....	2
					UOC:B16,H16	

END OF FIGURE

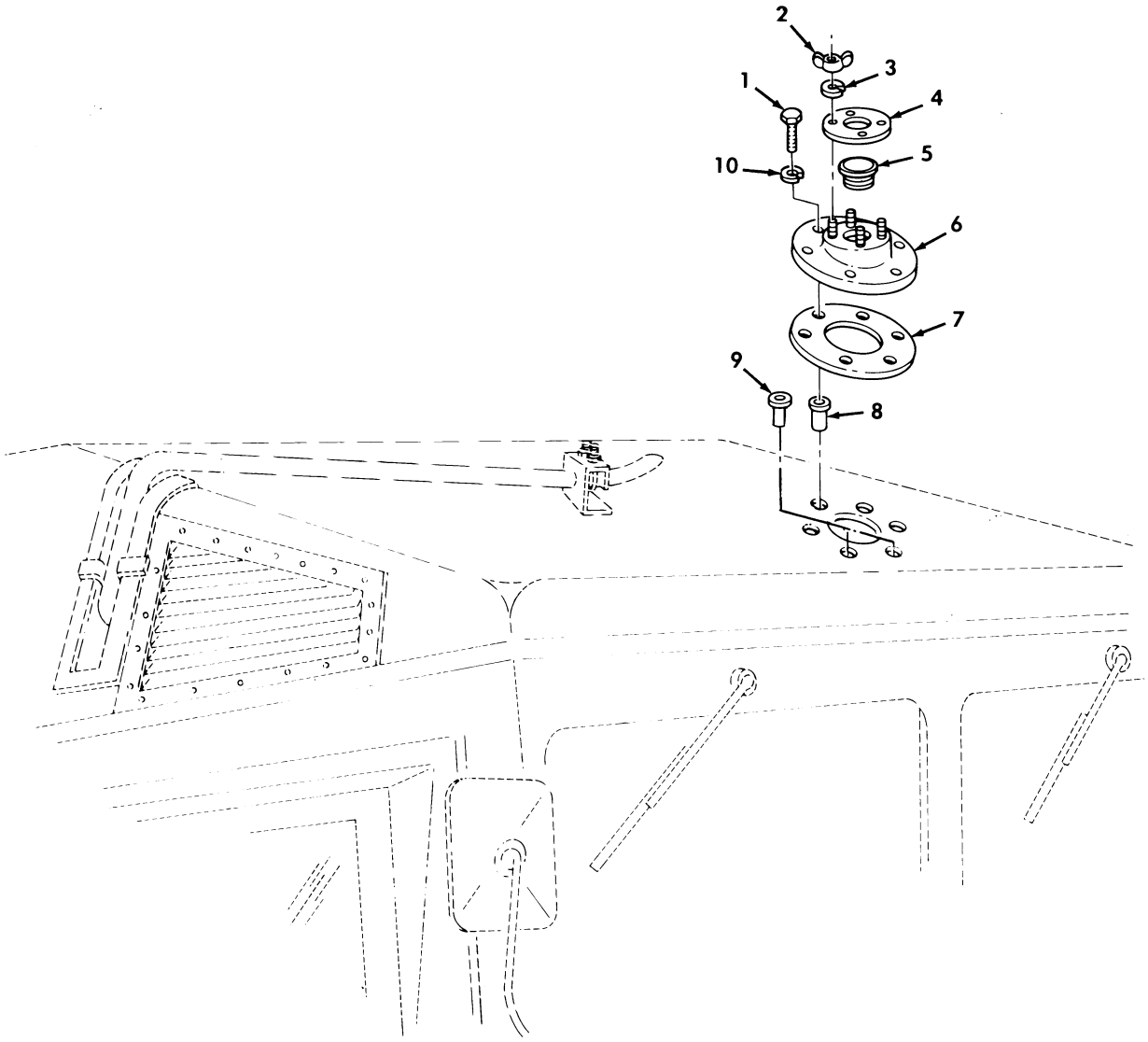

Figure 340. Antenna Mount and Mounting Hardware, M996 and M996A1 Ambulance.

(1) ITEM NO	(2) SMR CODE	(3) NSN	(4) CAGEC	(5) PART NUMBER	(6) DESCRIPTION AND USABLE ON CODES(UOC)	(7) QTY
					GROUP 2202 ACCESSORY ITEMS	
					FIG. 340 ANTENNA MOUNT AND MOUNTING HARDWARE,M996 AND M996A1 AMBULANCE	
1	PAOZZ	5306002264828	80204	B1821BH031C113N	BOLT,MACHINE 5/16-18 X 1.125..... UOC:B16,H16	6
2	PAOZZ	5310010882490	96906	MS35425-74	NUT,PLAIN,WING..... UOC:B16,H16	4
3	PAOZZ	5310006379541	96906	MS35338-46	WASHER,LOCK..... UOC:B16,H16	4
4	PAOZZ	5330012708315	19207	12341876	GASKET..... UOC:B16,H16	1
5	PAOZZ	5340011940887	99017	BPF-3-1/2	PLUG,PROTECTIVE,DUS..... UOC:B16,H16	1
6	PAOZZ	5985012698272	19207	12341466	BASE,ANTENNA SUPPOR..... UOC:B16,H16	1
7	PAOZZ	5330012988127	34623	5597985	GASKET..... UOC:B16,H16	1
8	PAOZZ	5310011016046	96906	MS27130-A50	NUT,PLAIN,BLIND RIV..... UOC:B16,H16	4
9	PAOZZ	5310010465382	96906	MS27130-A43	NUT,PLAIN,BLIND RIV..... UOC:B16,H16	2
10	PAOZZ	5310004079566	96906	MS35338-45	WASHER,LOCK 5/16..... UOC:B16,H16	6

END OF FIGURE

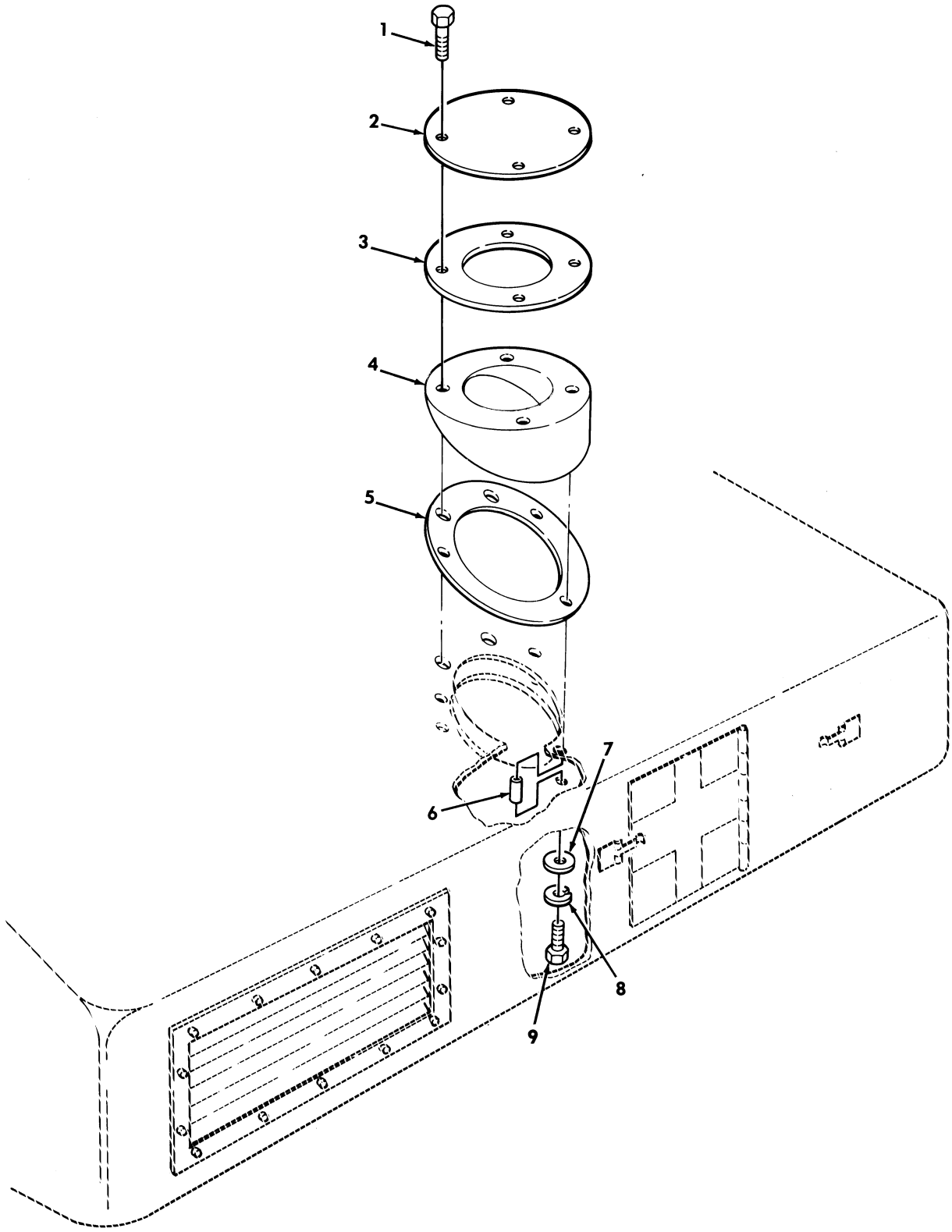

Figure 341. Antenna Mount and Mounting Hardware, M997, M997A1, and M997A2 Ambulance.

(1) ITEM NO	(2) SMR CODE	(3) NSN	(4) CAGEC	(5) PART NUMBER	(6) DESCRIPTION AND USABLE ON CODES(UOC)	(7) QTY
					GROUP 2202 ACCESSORY ITEMS	
					FIG. 341 ANTENNA MOUNT AND MOUNTING HARDWARE,M997,M997A1,AND M997A2 AMBULANCE	
1	PAOZZ	5305005432419	80204	B1821BH038C113N	SCREW,CAP,HEXAGON H 3/8-16 X 1.125. UOC:A15,B15,H15	4
2	PAOZZ	5985012698271	34623	5598650	SUPPORT,ANTENNA..... UOC:A15,B15,H15	1
3	PAOZZ	5330012708315	19207	12341876	GASKET..... UOC:A15,B15,H15	1
4	PAOZZ	5985012698274	19207	12341108	BASE,ANTENNA SUPPOR..... UOC:A15,B15,H15	1
5	PAOZZ	5330012820913	34623	5589970	GASKET..... UOC:A15,B15,H15	1
6	XBOZZ		34623	5934310	SPACER,FRAME..... UOC:A15,B15,H15	3
7	PAOZZ	5310014124013	24617	2436163	WASHER,FLAT 3/8..... UOC:A15,B15,H15	3
8	PAOZZ	5310002617340	96906	MS35338-8	WASHER,LOCK 3/8..... UOC:A15,B15,H15	3
9	PAOZZ	5305006388920	80204	B1821BH038C225N	SCREW,CAP,HEXAGON H 3/8-16 X 2.250. UOC:A15,B15,H15	3

END OF FIGURE

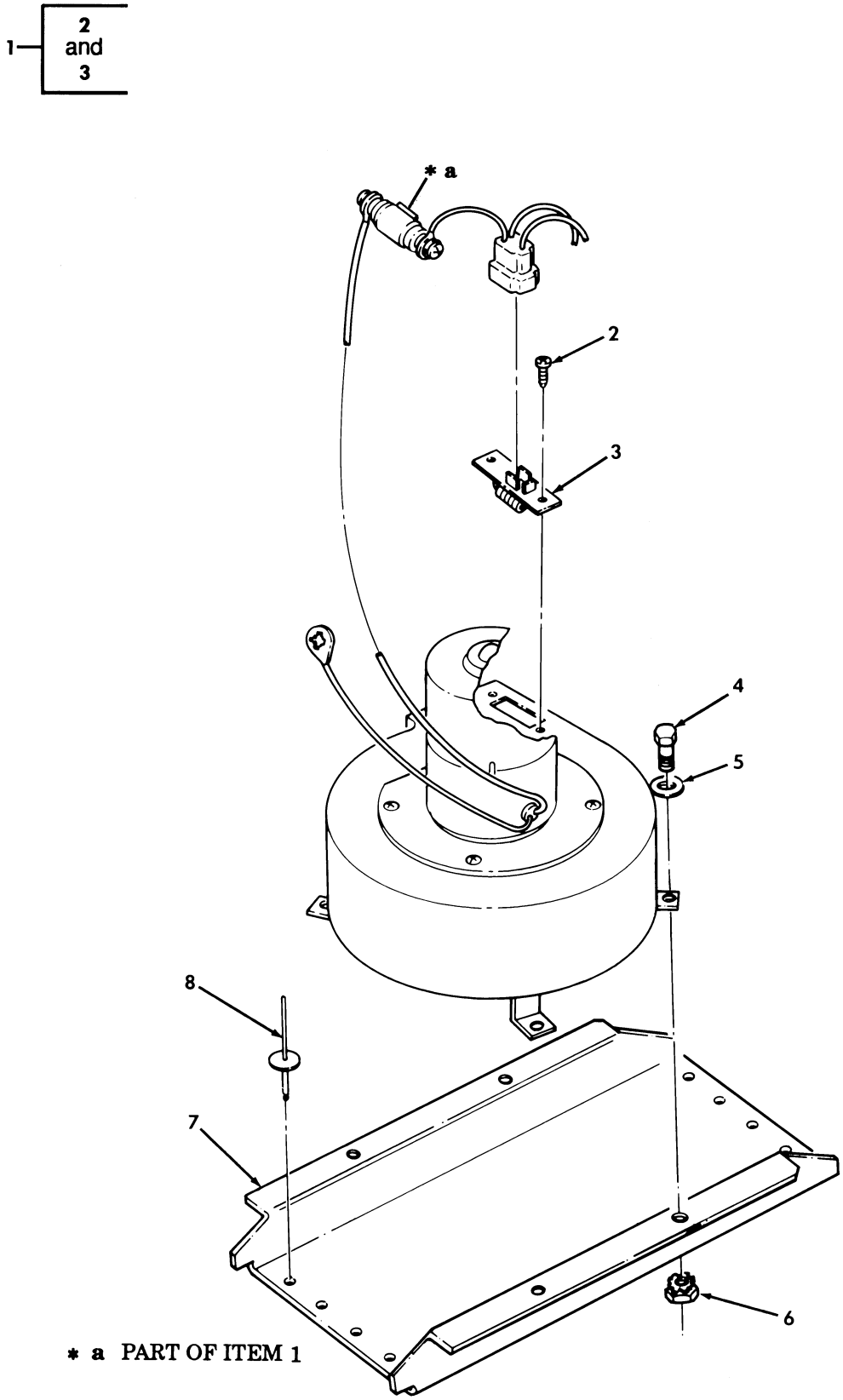

Figure 342. Heater Blower Assembly, M996 and M996A1 Ambulance.

(1) ITEM NO	(2) SMR CODE	(3) NSN	(4) CAGEC	(5) PART NUMBER	(6) DESCRIPTION AND USABLE ON CODES(UOC)	(7) QTY
					GROUP 2202 ACCESSORY ITEMS	
					FIG. 342 HEATER BLOWER ASSEMBLY,M996 AND M996A1 AMBULANCE	
1	PAOZZ	4140012653151	19207	12341610	FAN,CENTRIFUGAL..... UOC:B16,H16	1
2	PAOZZ	5305012705419	24234	200335	.SCREW,TAPPING,THREA..... UOC:B16,H16	2
3	PAOZZ	5905012700966	21002	HV033596	.RESISTOR,FIXED,FILM..... UOC:B16,H16	1
4	PAOZZ	5305000680502	96906	MS90725-6	SCREW,CAP,HEXAGON H 1/4-20 X .75... UOC:B16,H16	3
5	PAOZZ	5310005825965	96906	MS35338-44	WASHER,LOCK 1/4..... UOC:B16,H16	3
* 6	PAOZZ	5310011981722	34623	5982526	NUT,PLAIN,BLIND RIV..... UOC:B16,H16	3
7	PFOZZ	5340012893244	19207	12341661	BRACKET,MOUNTING..... UOC:B16,H16	1
8	PAOZZ	5320012645978	19207	12339355-2	RIVET,BLIND 3/16..... UOC:B16,H16	8

END OF FIGURE

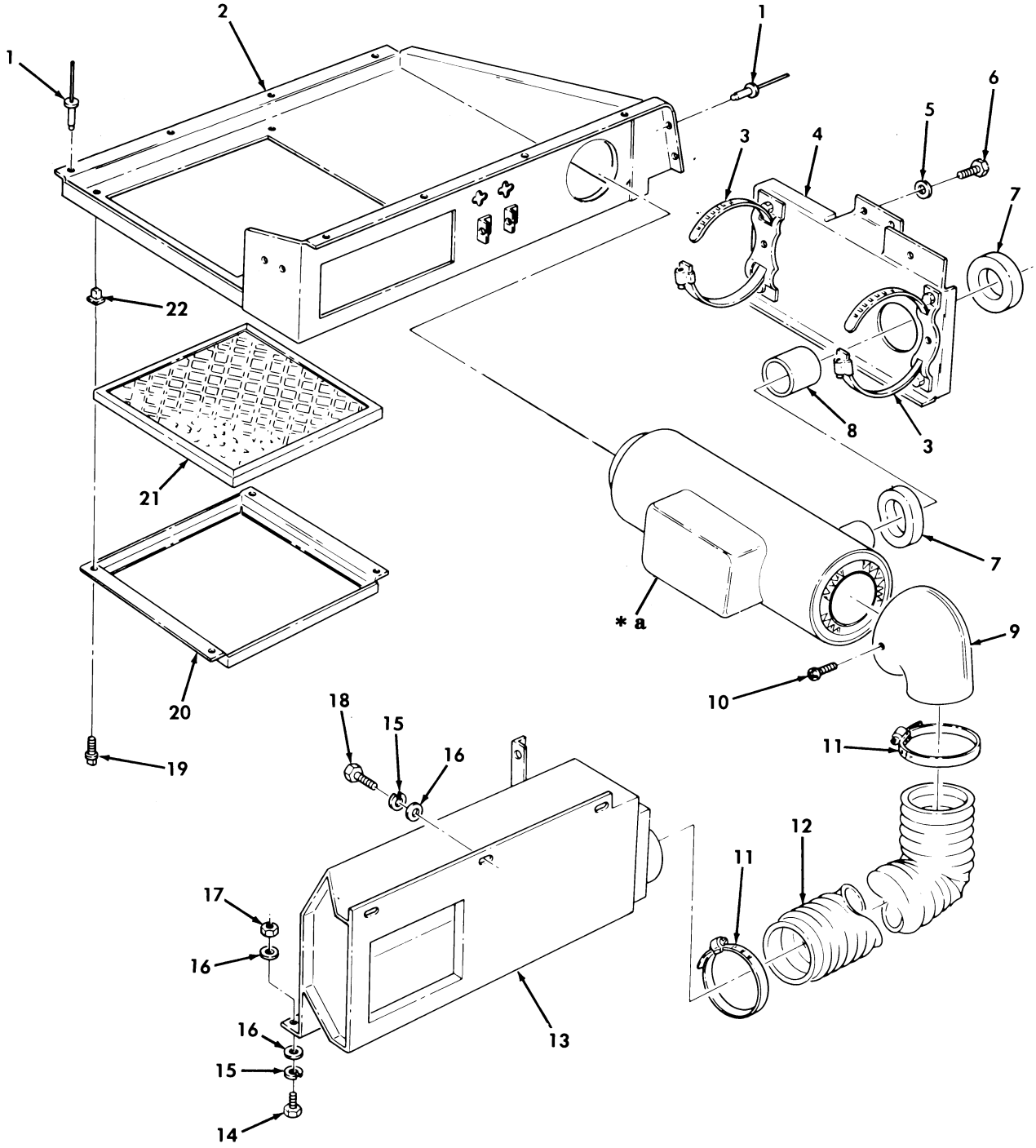

* a SEE FIGURE **345** AND **348** FOR MODELS AND BREAKDOWN

Figure 343. Heater, Filter, and Attaching Hardware, M997, M997A1, and M997A2 Ambulance.

(1) ITEM NO	(2) SMR CODE	(3) NSN	(4) CAGEC	(5) PART NUMBER	(6) DESCRIPTION AND USABLE ON CODES(UOC)	(7) QTY
					GROUP 2202 ACCESSORY ITEMS	
					FIG. 343 HEATER,FILTER,AND ATTACHING HARDWARE,M997,M997A1,AND M997A2 AMBULANCE	
1	PAOZZ	5320012716357	9K475	MGLP-B6-4	RIVET,BLIND..... UOC:A15,B15,H15	10
2	PFOZZ	2540012911043	15434	410912	VENTILATOR,AIR CIRC..... UOC:A15,B15,H15	1
3	PAOZZ	4730009086294	76599	96HSS	CLAMP,HOSE..... UOC:A15,B15,H15	2
4	XBOZZ		34623	5597900	BRACKET,MOUNTING..... UOC:A15,B15,H15	1
5	PAOZZ	5310002748710	24234	202751	WASHER,LOCK #10..... UOC:A15,B15,H15	2
6	PAOZZ	5305012967762	24234	201686	SCREW,CAP,HEXAGON H 1/4-20 X .75... UOC:A15,B15,H15	2
7	PFOZZ	5330012708317	34623	5741471	GASKET..... UOC:A15,B15,H15	2
8	PFOZZ	2510012730572	34623	5741525	COLLAR,FRAME..... UOC:A15,B15,H15	1
9	PAOZZ	4520011926073	99688	586230	ADAPTER,AIR CONDITI..... UOC:A15,B15,H15	1
10	PAOZZ	5305009846195	96906	MS35206-247	SCREW,MACHINE..... UOC:A15,B15,H15	3
11	PAOZZ	4730012737660	7Z588	63060	CLAMP,HOSE..... UOC:A15,B15,H15	2
12	PFOZZ	4720012653238	24234	319032	HOSE,NONMETALLIC..... UOC:A15,B15,H15	1
13	PFOZZ	2540012969358	24234	410922	VENTILATOR,AIR CIRC..... UOC:A15,B15,H15	1
14	PAOZZ	5305000680502	96906	MS90725-6	SCREW,CAP,HEXAGON H 1/4-20 X 3/4... UOC:A15,B15,H15	4
15	PAOZZ	5310005825965	96906	MS35338-44	WASHER,LOCK 1/4..... UOC:A15,B15,H15	7
16	PAOZZ	5310008094058	96906	MS27183-10	WASHER,FLAT 1/4..... UOC:A15,B15,H15	11
17	PAOZZ	5310000614650	96906	MS51943-31	NUT,SELF-LOCKING,HE 1/4-20..... UOC:A15,B15,H15	4
18	PAOZZ	5305002253843	80204	B1821BH025C100N	SCREW,CAP,HEXAGON H 1/4-20 X 1.00.. UOC:A15,B15,H15	3
19	PAOZZ	5305012645874	19207	12340792	SCREW,TAPPING #10 X 1/2..... UOC:A15,B15,H15	4
20	PFOZZ	2940012852942	24234	513447	FILTER BODY,FLUID..... UOC:A15,B15,H15	1
21	PAOZZ	2540012653266	24234	407234	FILTER ELEMENT,FLUI..... UOC:A15,B15,H15	1
22	PAOZZ	5310012705394	34623	5741475	NUT,EXPANSION..... UOC:A15,B15,H15	4

END OF FIGURE

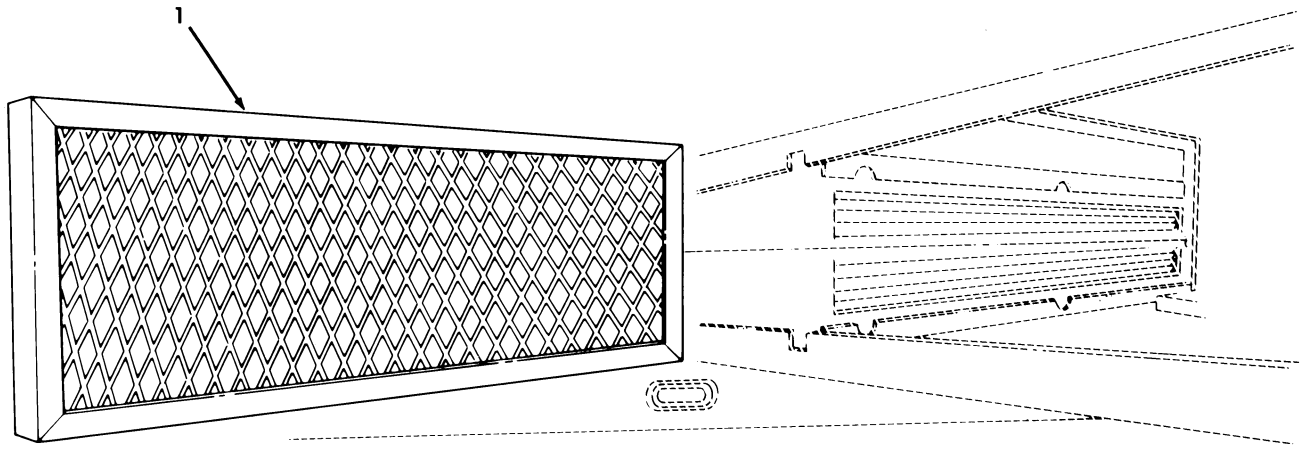

Figure 344. Air Intake Filter, M996 and M996A1 Ambulance.

(1) ITEM NO	(2) SMR CODE	(3) NSN	(4) CAGEC	(5) PART NUMBER	(6) DESCRIPTION AND USABLE ON CODES(UOC)	(7) QTY
					GROUP 2202 ACCESSORY ITEMS	
					FIG. 344 AIR INTAKE FILTER,M996 AND M996A1 AMBULANCE	
1	PAOZZ	4130012658691	19207	12341286	FILTER ELEMENT,AIR..... UOC:B16,H16	1

END OF FIGURE

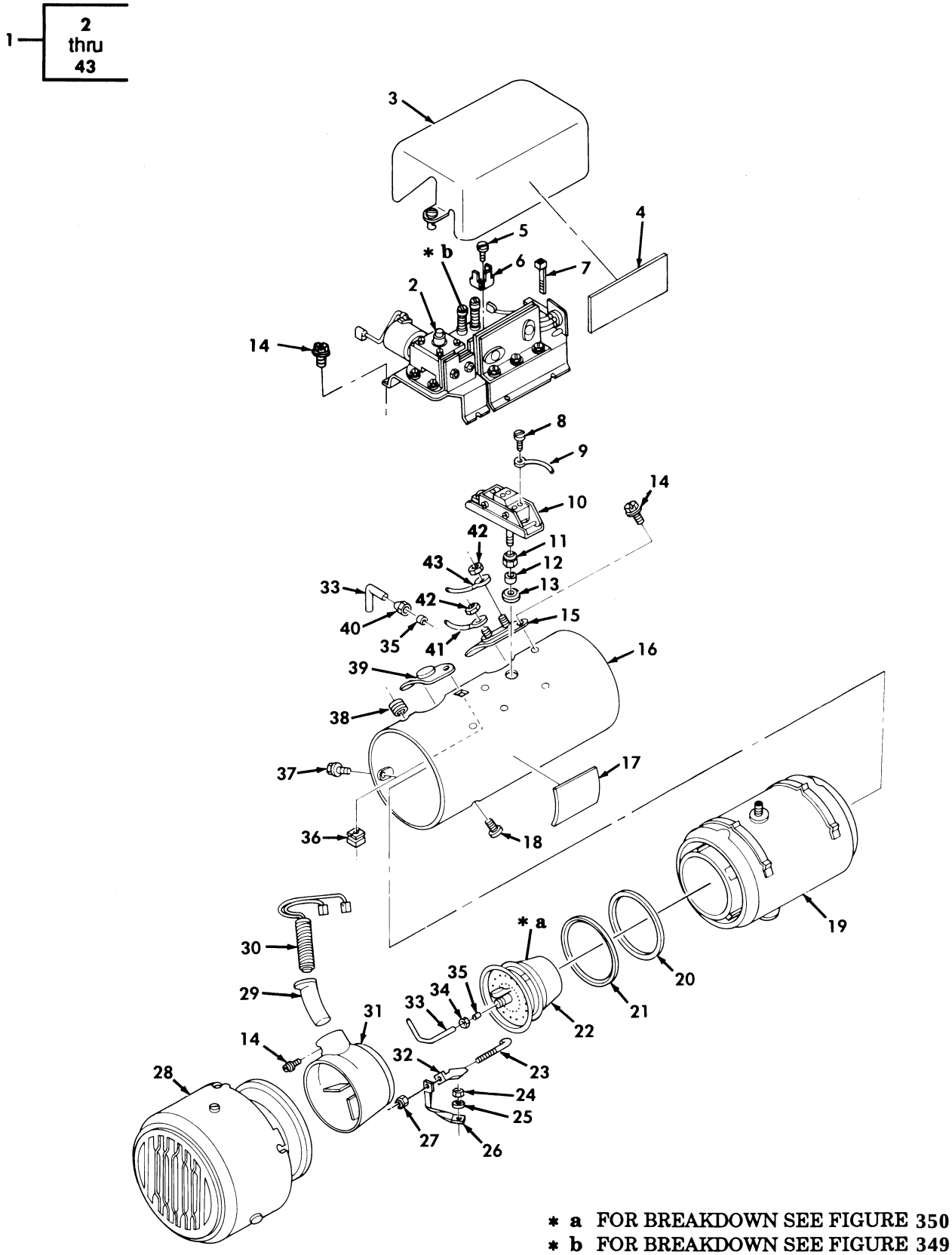

Figure 345. Heater Assembly, Multifuel, B=Model, M996, M996A1, M997, M997A1, and M997A2 Ambulance.

(1) ITEM NO	(2) SMR CODE	(3) NSN	(4) CAGEC	(5) PART NUMBER	(6) DESCRIPTION AND USABLE ON CODES(UOC)	(7) QTY
					GROUP 2202 ACCESSORY ITEMS	
					FIG. 345 HEATER ASSEMBLY,MULTIFUEL, B-MODEL,M996,M996A1,M997,M997A1,AND M997A2 AMBULANCE	
1	PAOFF	2540011943323	81349	MIL-PRF-62550/3	HEATER,VEHICULAR,CO..... UOC:A15,B15,B16,H15,H16	1
2	XBFFF		78385	G706064	.BRACKET,COMPONENT H..... UOC:A15,B15,B16,H15,H16	1
3	PFFZZ	5340012906331	78385	G706033	.COVER,ACCESS..... UOC:A15,B15,B16,H15,H16	1
4	PFFZZ	7690012837938	78385	706025	.DECAL..... UOC:A15,B15,B16,H15,H16	1
5	PAFZZ	5305012906290	78385	706074	.SCREW,CAP,HEXAGON H #8-32 X 3/8... UOC:A15,B15,B16,H15,H16	2
6	PFFZZ	5940012926907	78385	706070	.TERMINAL,STATIONARY..... UOC:A15,B15,B16,H15,H16	1
7	PAFZZ	5975011280390	06383	PLT2S	.STRAP,TIEDOWN,ELECT..... UOC:A15,B15,B16,H15,H16	4
8	PAFZZ	5305004562582	57733	170677	.SCREW,ASSEMBLED WAS #6-32 X 1/4... UOC:A15,B15,B16,H15,H16	5
9	PFFZZ	6150012879918	78385	G706052-25	.CABLE ASSEMBLY,SPEC..... UOC:A15,B15,B16,H15,H16	1
10	PAFZZ	5930003455455	19207	11663057	.SWITCH,THERMOSTATIC..... UOC:A15,B15,B16,H15,H16	1
11	PAFZZ	5975012886594	78385	705267	.NUT,COUPLING,ELECTR 1/4..... UOC:A15,B15,B16,H15,H16	1
12	PAFZZ	4730011937390	10988	222-652	.SLEEVE,COMPRESSION,..... UOC:A15,B15,B16,H15,H16	1
13	PAFZZ	5310012878726	78385	705930	.WASHER,FLAT..... UOC:A15,B15,B16,H15,H16	1
14	PAFZZ	5305004035130	24617	423531	.SCREW,MACHINE #8-32 X 1/4..... UOC:A15,B15,B16,H15,H16	12
15	PAFZZ	5930006795925	19207	10948233	.SWITCH,THERMOSTATIC..... UOC:A15,B15,B16,H15,H16	1
16	XAFZZ		78385	G706034	.HOUSING ASSEMBLY..... UOC:A15,B15,B16,H15,H16	1
17	PFOZZ	9905012837937	78385	706015	.PLATE,IDENTIFICATIO..... UOC:A15,B15,B16,H15,H16	1
18	PAFZZ	5305005762335	57733	487357	.SCREW,ASSEMBLED WAS #8-32 X 3/8... UOC:A15,B15,B16,H15,H16	1
19	PFFZZ	2540011650465	78385	G704232	.HEAT EXCHANGER..... UOC:A15,B15,B16,H15,H16	1
20	PAFZZ	5330000890978	19207	10948235	.GASKET PART OF KIT P/N 5704052..... UOC:A15,B15,B16,H15,H16	1
21	PAFZZ	5331000890998	78385	718768-23	.O-RING PART OF KIT P/N 5704052..... UOC:A15,B15,B16,H15,H16	1
22	PFFZZ	4520012847099	78385	G706055	.BURNER ASSEMBLY,SPA..... UOC:A15,B15,B16,H15,H16	1
23	PAFZZ	5306013517742	78385	703547	.BOLT,HOOK PART OF KIT P/N 5704052.. UOC:A15,B15,B16,H15,H16	4
24	PAFZZ	5310003337341	78385	487283	.NUT,PLAIN,HEXAGON #8-32 PART OF	4

(1) ITEM NO	(2) SMR CODE	(3) NSN	(4) CAGEC	(5) PART NUMBER	(6) DESCRIPTION AND USABLE ON CODES(UOC)	(7) QTY
					KIT P/N 5704052.....	
					UOC:A15,B15,B16,H15,H16	
25	PAFZZ	5310000610004	57733	475005	.WASHER,LOCK #8.....	1
					UOC:A15,B15,B16,H15,H16	
26	PFFZZ	6150011654667	78385	G704373	.LEAD,ELECTRICAL.....	1
					UOC:A15,B15,B16,H15,H16	
27	PAFZZ	5310012876543	78385	706131	.NUT,SELF-LOCKING,HE #8-32 PART OF	4
					KIT P/N 5704052.....	
					UOC:A15,B15,B16,H15,H16	
28	PAFZZ	2540012898328	78385	G706014	.BLOWER ASSEMBLY,HEA.....	1
					UOC:A15,B15,B16,H15,H16	
29	PFFZZ	2540011658176	78385	G704288-1	.IGNITER TUBE AND BR.....	1
					UOC:A15,B15,B16,H15,H16	
30	PAOZZ	4520002175782	16236	CS-4520-SV-0705	.IGNITER,SPARK,FUEL.....	1
					UOC:A15,B15,B16,H15,H16	
31	PFFZZ	2540011658175	78385	G704177	.HOUSING,BAFFLE,HEAT.....	1
					UOC:A15,B15,B16,H15,H16	
32	PFFZZ	5340012365101	78385	703546	.CLAMP,RIM CLENCHING PART OF KIT P/N	4
					5704052.....	
					UOC:A15,B15,B16,H15,H16	
33	PFFZZ	4710011632805	78385	704363	.TUBE ASSEMBLY,METAL.....	1
					UOC:A15,B15,B16,H15,H16	
34	PFFZZ	4730000433750	21450	120487	.NUT,TUBE COUPLING.....	1
					UOC:A15,B15,B16,H15,H16	
35	PFFZZ	4730007017737	78385	476624	.SLEEVE,COMPRESSION,.....	2
					UOC:A15,B15,B16,H15,H16	
36	PFFZZ	2540012900715	78385	706041	.RECEPTACLE,HEATER H.....	2
					UOC:A15,B15,B16,H15,H16	
37	PAFZZ	5305000188370	78385	489142	.SCREW,MACHINE #8-32 X 3/8.....	4
					UOC:A15,B15,B16,H15,H16	
38	PAFZZ	5325005432902	78385	488993	.GROMMET,NONMETALLIC.....	1
					UOC:A15,B15,B16,H15,H16	
39	PFOZZ	2540012898329	78385	G706035	.HATCH COVER,HEATER.....	1
					UOC:A15,B15,B16,H15,H16	
40	PFFZZ	4730011531871	79470	1611X3	.LOCKNUT,TUBE FITTIN.....	1
					UOC:A15,B15,B16,H15,H16	
41	PFFZZ	6150012914809	78385	G706052-9	.CABLE ASSEMBLY,SPEC.....	1
					UOC:A15,B15,B16,H15,H16	
42	PAFZZ	5310000637360	83385	841-6-32	.NUT,PLAIN,ASSEMBLED #6-32.....	2
					UOC:A15,B15,B16,H15,H16	
43	PFFZZ	6150012879917	78385	G706052-21	.CABLE ASSEMBLY,SPEC.....	1
					UOC:A15,B15,B16,H15,H16	

END OF FIGURE

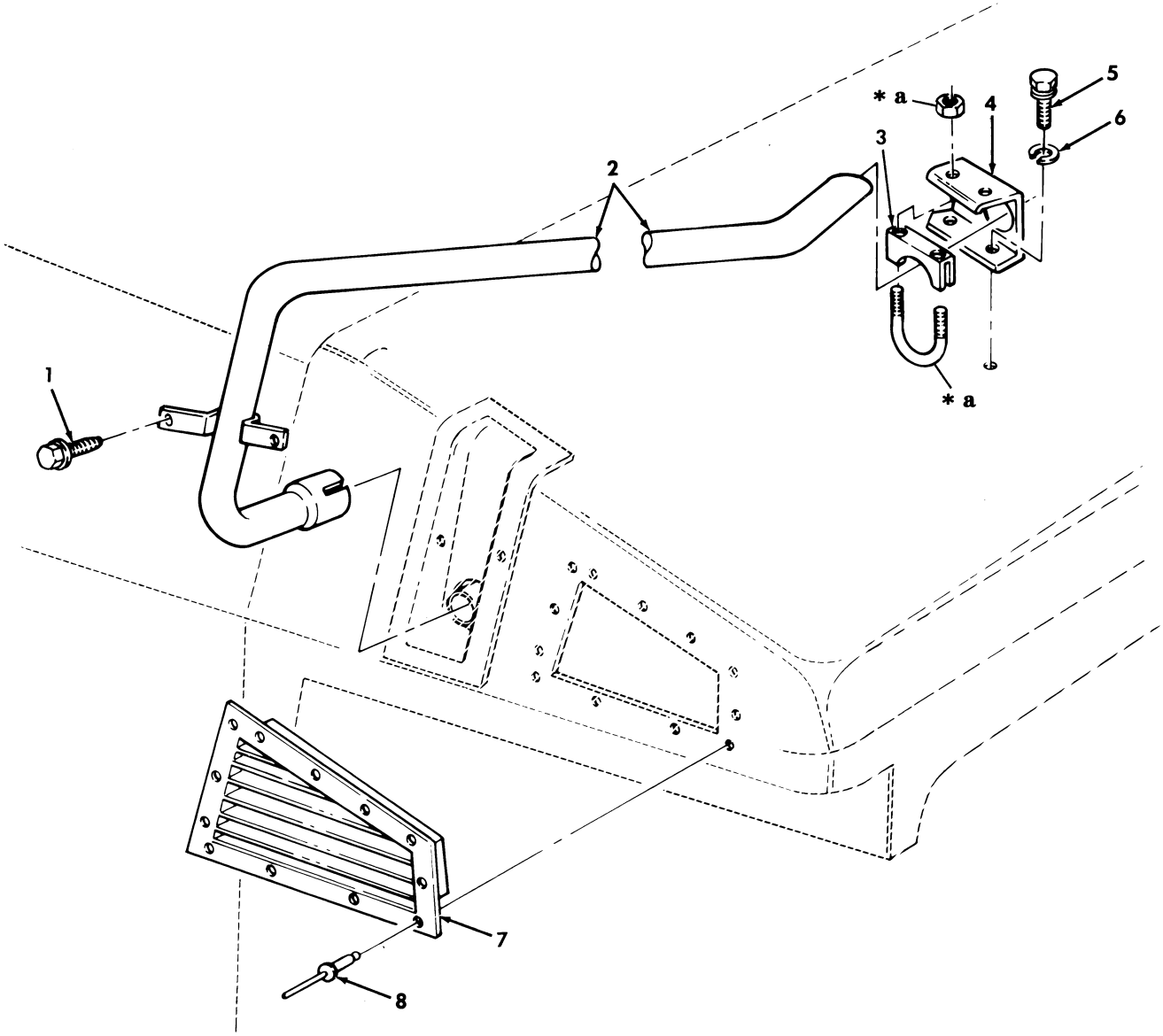

* a PART OF ITEM 3

Figure 346. Heater Grille, Exhaust Pipe, and Mounting Hardware, M996 and M996A1 Ambulance.

(1) ITEM NO	(2) SMR CODE	(3) NSN	(4) CAGEC	(5) PART NUMBER	(6) DESCRIPTION AND USABLE ON CODES(UOC)	(7) QTY
					GROUP 2202 ACCESSORY ITEMS	
					FIG. 346 HEATER GRILLE,EXHAUST PIPE, AND MOUNTING HARDWARE,M996 AND M996A1 AMBULANCE	
1	PAOZZ	5306002264828	80204	B1821BH031C113N	BOLT,MACHINE 5/16-18 X 1.125..... UOC:B16,H16	2
2	PFOZZ	2990012653297	19207	12341271	PIPE,EXHAUST..... UOC:B16,H16	1
3	PAOZZ	5340013330162	58536	A-A-52406-4SA	CLAMP,LOOP..... UOC:B16,H16	1
4	PFOZZ	5340012663843	19207	12341229	BRACKET,DOUBLE ANGL..... UOC:B16,H16	1
5	PAOZZ	5305013615353	24617	9414241	SCREW,TAPPING #10-32 X .50..... UOC:B16,H16	4
6	PAOZZ	5310000809786	96906	MS45904-60	WASHER,LOCK 5/16..... UOC:B16,H16	2
7	PFOZZ	5340012704415	19207	12341552	GRILLE,METAL..... UOC:B16,H16	1
8	PAOZZ	5320012711834	34623	5575940	RIVET,SOLID 3/16..... UOC:B16,H16	12

END OF FIGURE

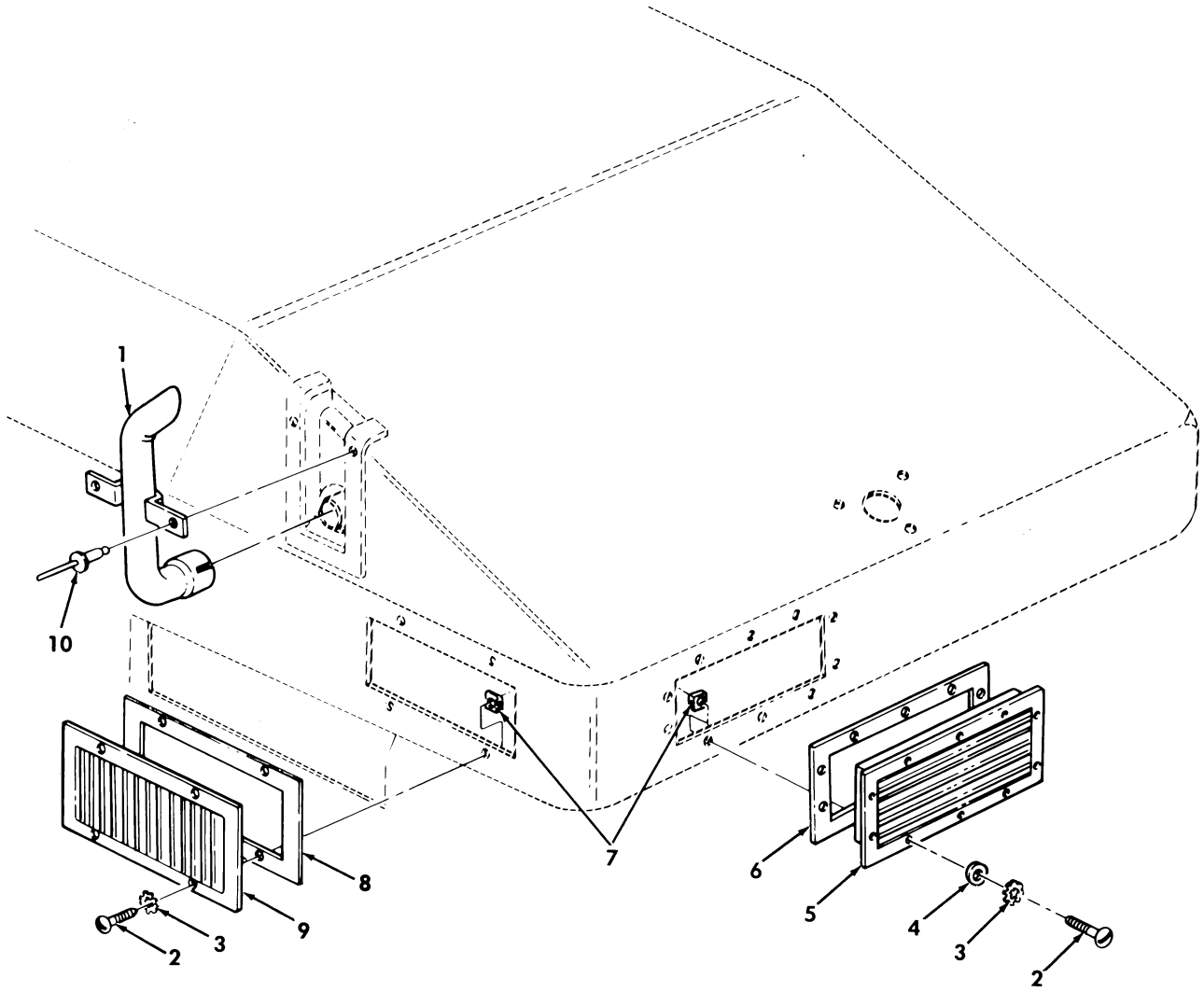

Figure 347. Heater Grille, Exhaust Pipe, and Mounting Hardware, M997, M997A1, and M997A2, Ambulance.

(1) ITEM NO	(2) SMR CODE	(3) NSN	(4) CAGEC	(5) PART NUMBER	(6) DESCRIPTION AND USABLE ON CODES(UOC)	(7) QTY
					GROUP 2202 ACCESSORY ITEMS	
					FIG. 347 HEATER GRILLE,EXHAUST PIPE, AND MOUNTING HARDWARE,M997,M997A1, AND M997A2 AMBULANCE	
1	PAOZZ	2990012653298	24234	513462	PIPE,EXHAUST..... UOC:A15,B15,H15	1
2	PAOZZ	5305012554606	34623	5592900	SCREW,MACHINE #10-24 X 1/2..... UOC:A15,B15,H15	14
3	PAOZZ	5310000809786	96906	MS45904-60	WASHER,LOCK #10..... UOC:A15,B15,H15	14
4	PAOZZ	5310000145850	96906	MS27183-42	WASHER,FLAT #10..... UOC:A15,B15,H15	10
5	PAOZZ	2510012707919	19207	12341533	GRILLE,RADIATOR,VEH..... UOC:A15,B15,H15	1
6	PAOZZ	5330012727472	19207	12341514	GASKET..... UOC:A15,B15,H15	1
7	PAOZZ	5310012155356	78553	C8117-1024	NUT,SHEET SPRING #10-24..... UOC:A15,B15,H15	14
8	PAOZZ	5330012727471	19207	12341487	GASKET..... UOC:A15,B15,H15	1
9	PAOZZ	2540012712839	19207	12341088	VENTILATOR,AIR CIRC..... UOC:A15,B15,H15	1
10	PAOZZ	5320012716357	9K475	MGLP-B6-4	RIVET,BLIND 3/16..... UOC:A15,B15,H15	2

END OF FIGURE

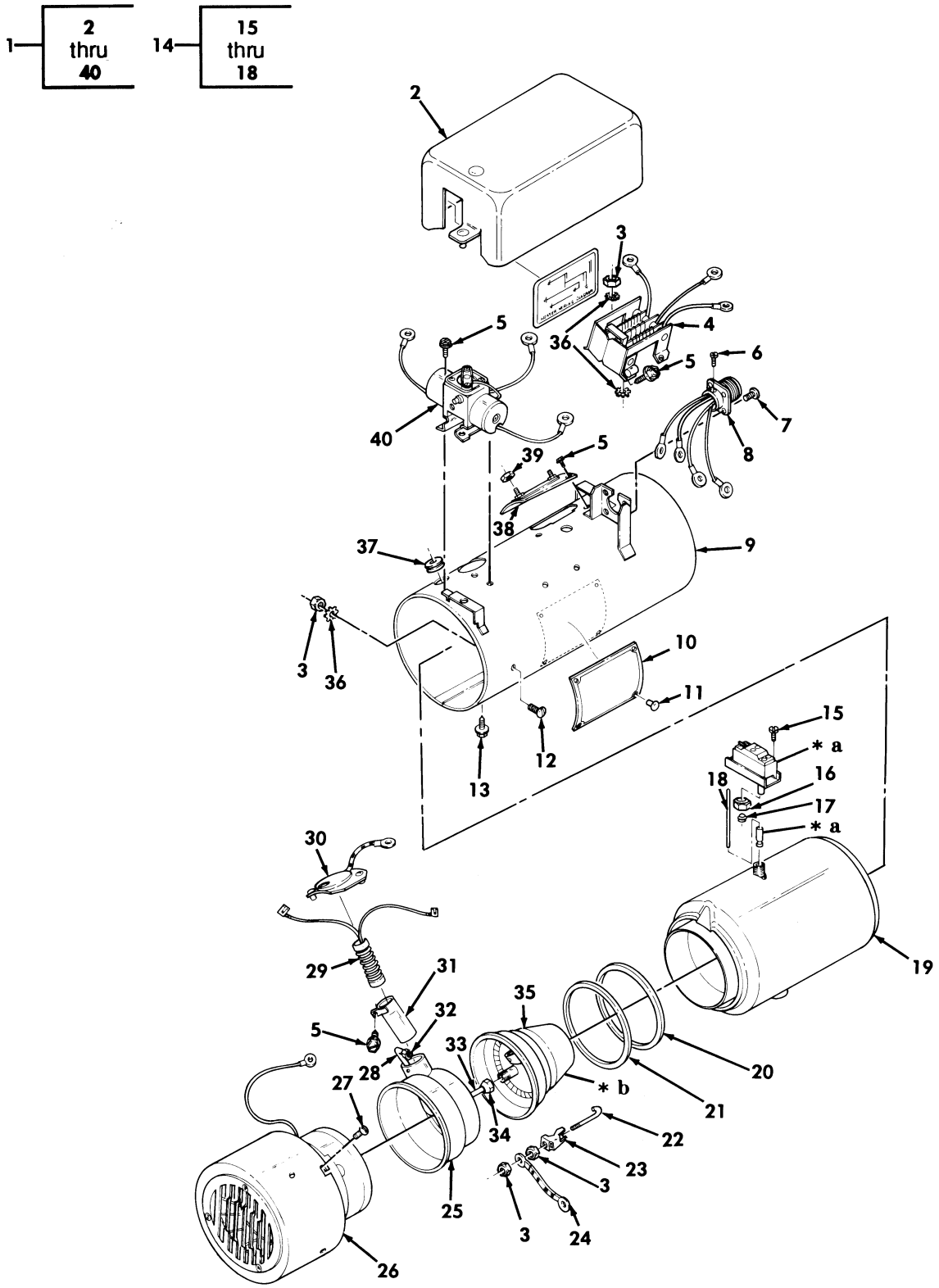

* a PART OF ITEM 14
* b SEE FIGURE 351 FOR BREAKDOWN

Figure 348. Heater Assembly, Multifuel, A-Model, M996, M996A1, M997, M997A1, and M997A2 Ambulance.

(1) ITEM NO	(2) SMR CODE	(3) NSN	(4) CAGEC	(5) PART NUMBER	(6) DESCRIPTION AND USABLE ON CODES(UOC)	(7) QTY
					GROUP 2202 ACCESSORY ITEMS	
					FIG. 348 HEATER ASSEMBLY,MULTIFUEL, A-MODEL,M996,M996A1,M997,M997A1,AND M997A2 AMBULANCE	
* 1	PAOFF	2540011943323	81349	MIL-PRF-62550/3	HEATER,VEHICULAR,CO..... UOC:A15,B15,B16,H15,H16	1
* 2	PFFZZ	5935011638981	78385	G704183	.COVER,ELECTRICAL CO..... UOC:A15,B15,B16,H15,H16	1
* 3	KFFZZ		78385	487283	.NUT,PLAIN,HEXAGON PART OF KIT P/N 5704052 PART OF KIT P/N G704424..... UOC:A15,B15,B16,H15,H16	4
* 4	PFFZZ	5905002517145	19207	11663061	.RESISTOR ASSEMBLY..... UOC:A15,B15,B16,H15,H16	1
* 5	PAFZZ	5305004035130	24617	423531	.SCREW,MACHINE #8-32 X 1/4..... UOC:A15,B15,B16,H15,H16	3
* 6	PAFZZ	5305004562582	57733	170677	.SCREW,ASSEMBLED WAS..... UOC:A15,B15,B16,H15,H16	1
* 7	PAFZZ	5305001353032	78385	488558	.SCREW,ASSEMBLED WAS #6-32 X 3/8... UOC:A15,B15,B16,H15,H16	4
* 8	PAFZZ	5935011638987	78385	G704234	.CONNECTOR,RECEPTACL..... UOC:A15,B15,B16,H15,H16	1
* 9	XAFZZ		78385	G704213	.HOUSING ASSEMBLY,HE..... UOC:A15,B15,B16,H15,H16	1
* 10	PFOZZ	9905010174748	78385	704501	.PLATE,IDENTIFICATIO..... UOC:A15,B15,B16,H15,H16	1
* 11	PAOZZ	5320008011548	57733	488755	.RIVET,BLIND..... UOC:A15,B15,B16,H15,H16	4
* 12	PAFZZ	5305005762335	57733	487357	.SCREW,ASSEMBLED WAS #8-32 X 3/8... UOC:A15,B15,B16,H15,H16	1
* 13	PAFZZ	5305004035130	24617	423531	.SCREW,MACHINE #8-32 X 1/4..... UOC:A15,B15,B16,H15,H16	9
* 14	PAFZZ	5930003455455	19207	11663057	.SWITCH,THERMOSTATIC..... UOC:A15,B15,B16,H15,H16	1
* 15	PAFZZ	5305004562582	57733	170677	..SCREW,ASSEMBLED WAS..... UOC:A15,B15,B16,H15,H16	5
* 16	PAFZZ	4730000114627	81343	4-060110B	..NUT,TUBE COUPLING 1/4..... UOC:A15,B15,B16,H15,H16	1
* 17	PFFZZ	4730011937390	10988	222-652	..SLEEVE,COMPRESSION,..... UOC:A15,B15,B16,H15,H16	1
* 18	PFFZZ	2540002165722	78385	704225	..ROD,NONEXPANSIVE..... UOC:A15,B15,B16,H15,H16	1
* 19	PFFZZ	2540011650465	78385	G704232	.HEAT EXCHANGER..... UOC:A15,B15,B16,H15,H16	1
* 20	KFFZZ		78385	702903	.GASKET PART OF KIT P/N 5704052 PART OF KIT P/N G704424 PART OF KIT P/N G706055..... UOC:A15,B15,B16,H15,H16	1
* 21	KFFZZ		78385	718768-23	.O-RING PART OF KIT P/N 5704052 PART OF KIT P/N G704424 PART OF KIT P/N G706055..... UOC:A15,B15,B16,H15,H16	1

(1) ITEM NO	(2) SMR CODE	(3) NSN	(4) CAGEC	(5) PART NUMBER	(6) DESCRIPTION AND USABLE ON CODES(UOC)	(7) QTY
* 22	KFFZZ		78385	703547	.BOLT,HOOK PART OF KIT P/N 5704052 PART OF KIT P/N G704424 PART OF KIT P/N G706055..... UOC:A15,B15,B16,H15,H16	2
* 23	KFFZZ		78385	703546	.CLAMP,RIM CLENCHING PART OF KIT P/N 5704052 PART OF KIT P/N G704424 PART OF KIT P/N G706055..... UOC:A15,B15,B16,H15,H16	4
* 24	PFFZZ	6150011654667	78385	G704373	.LEAD,ELECTRICAL..... UOC:A15,B15,B16,H15,H16	4
* 25	PFFZZ	2540011658175	78385	G704177	.HOUSING,BAFFLE,HEAT..... UOC:A15,B15,B16,H15,H16	1
* 26	PAFZZ	2540010081501	78385	G704554	.BLOWER ASSEMBLY..... UOC:A15,B15,B16,H15,H16	1
* 27	PAFZZ	5305000188370	78385	489142	.SCREW,MACHINE #8-3/8 X 1.00..... UOC:A15,B15,B16,H15,H16	4
* 28	PFFZZ	4710011632805	78385	704363	.TUBE ASSEMBLY,METAL..... UOC:A15,B15,B16,H15,H16	4
* 29	PAOZZ	4520002175782	16236	CS-4520-SV-0705	.IGNITER,SPARK,FUEL..... UOC:A15,B15,B16,H15,H16	1
* 30	PFFZZ	5340011650745	78385	G704293	.COVER,ACCESS..... UOC:A15,B15,B16,H15,H16	1
* 31	PFFZZ	2540011658176	78385	G704288-1	.IGNITER TUBE AND BR..... UOC:A15,B15,B16,H15,H16	1
* 32	PAFZZ	4730011531871	79470	1611X3	.LOCKNUT,TUBE FITTIN..... UOC:A15,B15,B16,H15,H16	1
* 33	PFFZZ	4730007017737	78385	476624	.SLEEVE,COMPRESSION,..... UOC:A15,B15,B16,H15,H16	1
* 34	PAFZZ	4730000433750	21450	120487	.NUT,TUBE COUPLING..... UOC:A15,B15,B16,H15,H16	1
* 35	KFFFZ		78385	G706037	.BURNER ASSEMBLY PART OF KIT P/N G704424 PART OF KIT P/N G706055..... UOC:A15,B15,B16,H15,H16	1
* 36	PAFZZ	5310000610004	57733	475005	.WASHER,LOCK..... UOC:A15,B15,B16,H15,H16	3
* 37	PAFZZ	5325005432902	78385	488993	.GROMMET,NONMETALLIC..... UOC:A15,B15,B16,H15,H16	1
* 38	PAFZZ	5930006795925	19207	10948233	.SWITCH,THERMOSTATIC..... UOC:A15,B15,B16,H15,H16	1
* 39	PAFZZ	5310000637360	83385	841-6-32	.NUT,PLAIN,ASSEMBLED #6-32..... UOC:A15,B15,B16,H15,H16	2
* 40	PAFHH	4810002481635	19207	11663058	.VALVE ASSEMBLY,FUEL..... UOC:A15,B15,B16,H15,H16	1

END OF FIGURE

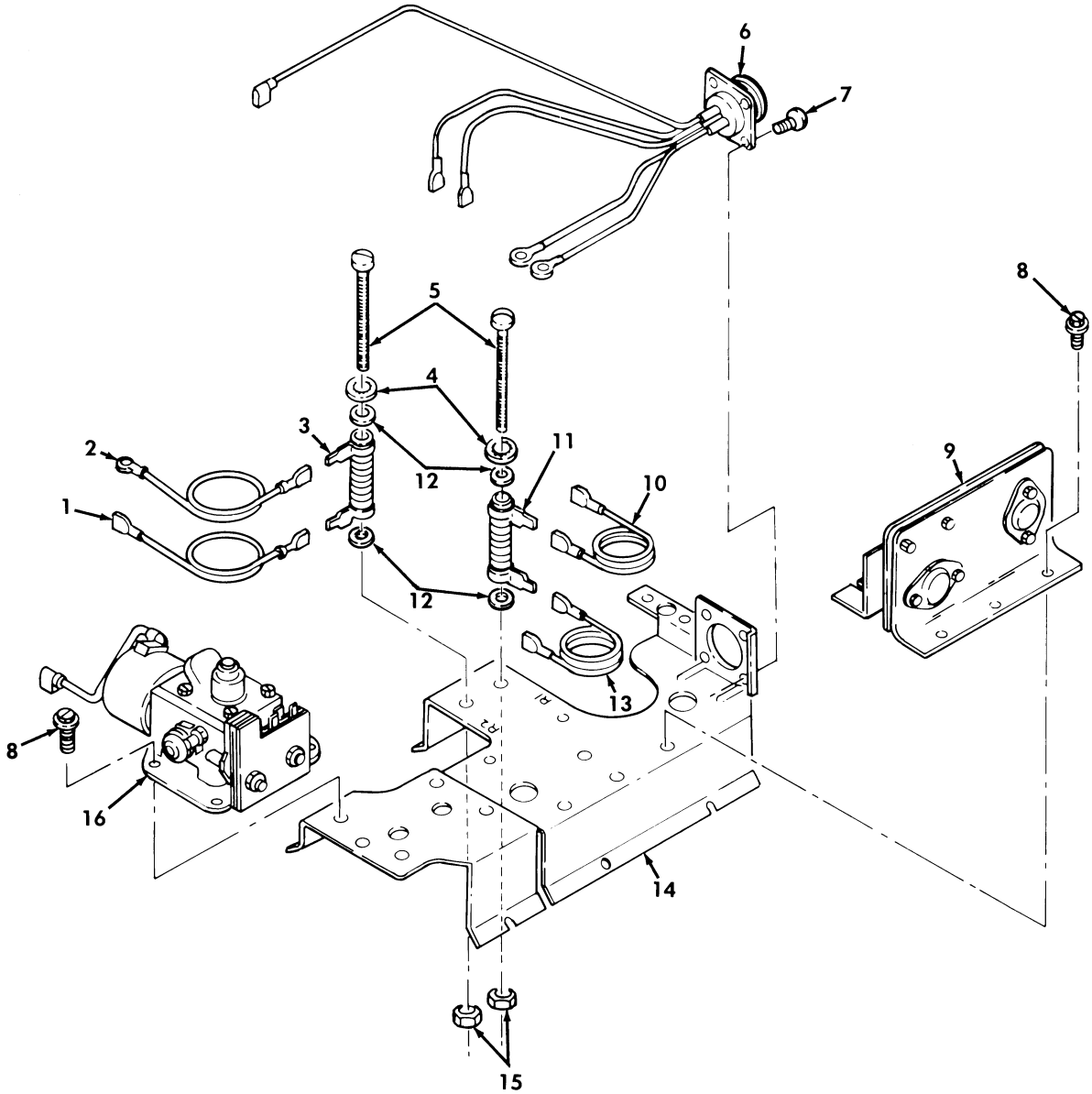

Figure 349. Heater Component Bracket Assembly, B-Model, M996, M996A1, M997, M997A1, and M997A2 Ambulance.

(1) ITEM NO	(2) SMR CODE	(3) NSN	(4) CAGEC	(5) PART NUMBER	(6) DESCRIPTION AND USABLE ON CODES(UOC)	(7) QTY
					GROUP 2202 ACCESSORY ITEMS	
					FIG. 349 HEATER COMPONENT BRACKET ASSEMBLY,B-MODEL,M996,M996A1,M997, M997A1,AND M997A2 AMBULANCE	
1	PFFZZ	6150012879925	78385	G706052-13	LEAD,ELECTRICAL..... UOC:A15,B15,B16,H15,H16	1
2	PFFZZ	6150012879924	78385	G706052-15	LEAD,ELECTRICAL..... UOC:A15,B15,B16,H15,H16	1
3	PAFZZ	5905012874255	78385	706053	RESISTOR,FIXED,WIRE..... UOC:A15,B15,B16,H15,H16	1
4	PAFZZ	5310005765752	96906	MS35333-39	WASHER,LOCK #10..... UOC:A15,B15,B16,H15,H16	2
5	PAFZZ	5305012881130	78385	703611	SCREW,MACHINE #10-32 X 2-1/2..... UOC:A15,B15,B16,H15,H16	2
6	PAFZZ	6150012934074	78385	G706026	LEAD ASSEMBLY,ELECT..... UOC:A15,B15,B16,H15,H16	1
7	PAFZZ	5305012881129	78385	705211	SCREW,MACHINE #5-40 X 5/16..... UOC:A15,B15,B16,H15,H16	4
8	PAFZZ	5305001159406	96906	MS51849-53	SCREW,MACHINE #8-32 X 3/8..... UOC:A15,B15,B16,H15,H16	7
9	PAFZZ	6110012853902	78385	G706057	VOLTAGE REGULATOR G..... UOC:A15,B15,B16,H15,H16	1
10	PFFZZ	6150012879923	78385	G706052-19	LEAD,ELECTRICAL..... UOC:A15,B15,B16,H15,H16	1
11	PAFZZ	5905012874256	78385	706045	RESISTOR,FIXED,WIRE..... UOC:A15,B15,B16,H15,H16	1
12	PAFZZ	5310012876557	78385	706050GV	WASHER,FLAT 5/16..... UOC:A15,B15,B16,H15,H16	4
13	PFFZZ	6150012879926	78385	G706052-17	LEAD,ELECTRICAL..... UOC:A15,B15,B16,H15,H16	1
14	XAFZZ		78385	G706024	COMPONENT BRACKET..... UOC:A15,B15,B16,H15,H16	1
15	PAFZZ	5310007890398	78385	487370	NUT,PLAIN,ASSEMBLED #10-32..... UOC:A15,B15,B16,H15,H16	2
16	PAFZZ	2540012536112	78385	G706016	FUEL VALVE..... UOC:A15,B15,B16,H15,H16	1

END OF FIGURE

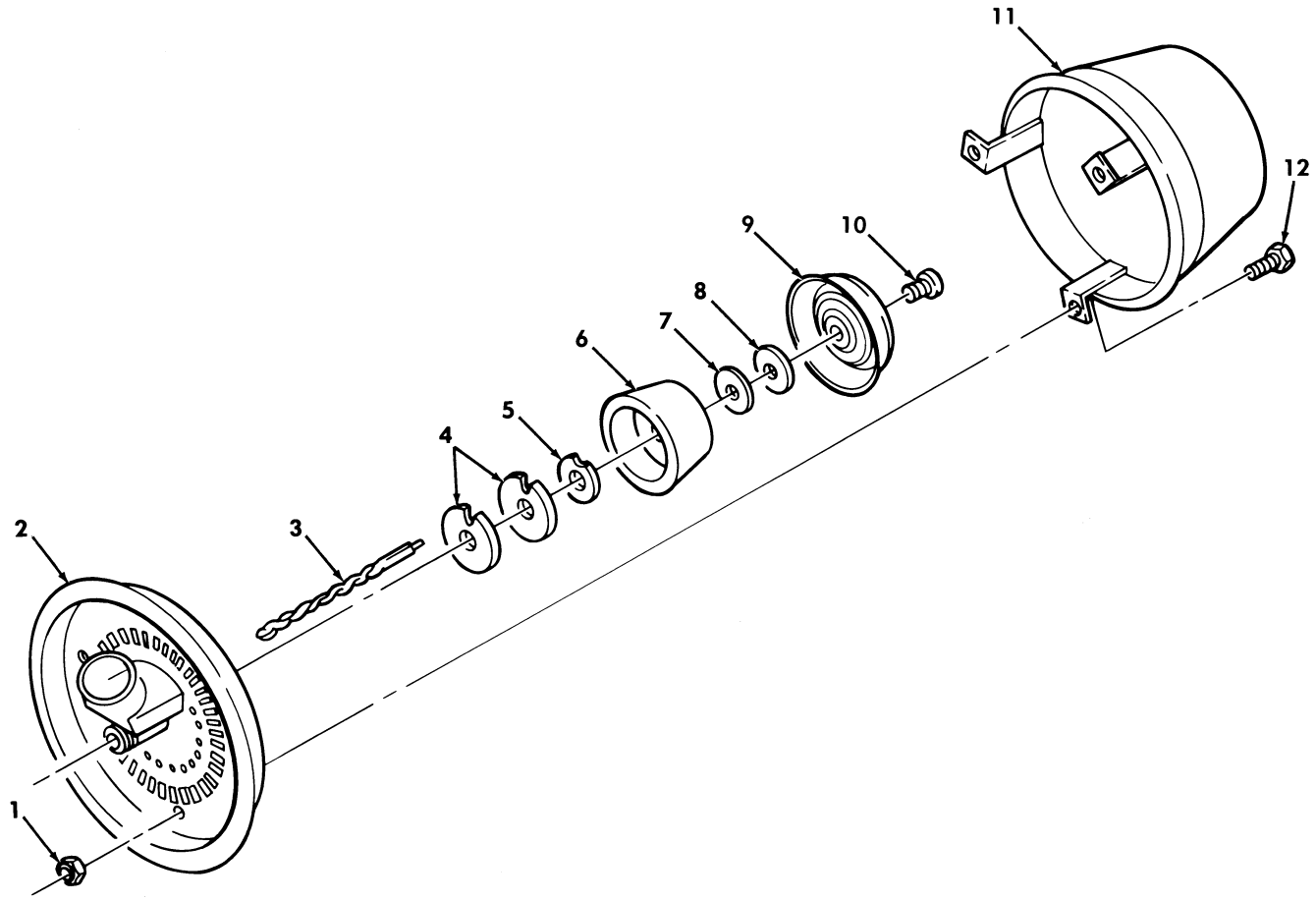

Figure 350. Burner Assembly, B-Model, M996, M996A1, M997, M997A1, and M997A2 Ambulance.

(1) ITEM NO	(2) SMR CODE	(3) NSN	(4) CAGEC	(5) PART NUMBER	(6) DESCRIPTION AND USABLE ON CODES(UOC)	(7) QTY
					GROUP 2202 ACCESSORY ITEMS	
					FIG. 350 BURNER ASSEMBLY,B-MODEL, M996,M996A1,M997,M997A1,AND M997A2 AMBULANCE	
1	KFFZZ		78385	705587	NUT,HEXAGON #8-32 PART OF KIT P/N 5704052..... UOC:A15,B15,B16,H15,H16	3
2	PFFZZ	2540011650814	78385	G704284	HEADER PLATE ASSEMB PART OF KIT P/N 5704052..... UOC:A15,B15,B16,H15,H16	1
3	KFFZZ		78385	705944	WICK PART OF KIT P/N 5704052..... UOC:A15,B15,B16,H15,H16	1
4	KFFZZ		78385	706062	WASHER PART OF KIT P/N 5704052..... UOC:A15,B15,B16,H15,H16	2
5	KFFZZ		78385	706049	WASHER PART OF KIT P/N 5704052..... UOC:A15,B15,B16,H15,H16	1
6	KFFZZ		78385	706063	VAPORIZER PART OF KIT P/N 5704052... UOC:A15,B15,B16,H15,H16	1
7	KFFZZ		78385	704678	WASHER,FLAT PART OF KIT P/N 5704052. UOC:A15,B15,B16,H15,H16	1
8	KFFZZ		78385	704190	WASHER PART OF KIT P/N 5704052..... UOC:A15,B15,B16,H15,H16	1
9	PFFZZ	2540011689482	78385	704181	SHIELD,FUEL VAPOR PART OF KIT P/N 5704052..... UOC:A15,B15,B16,H15,H16	1
10	PFFZZ	5305010978178	78385	704206	SCREW,MACHINE #8-32 X 1/4 PART OF KIT P/N 5704052..... UOC:A15,B15,B16,H15,H16	1
11	XAFZZ		78385	G706039	CUP..... UOC:A15,B15,B16,H15,H16	1
12	KFFZZ		78385	705032	SCREW #8-32 X 3/8 PART OF KIT P/N 5704052..... UOC:A15,B15,B16,H15,H16	3

END OF FIGURE

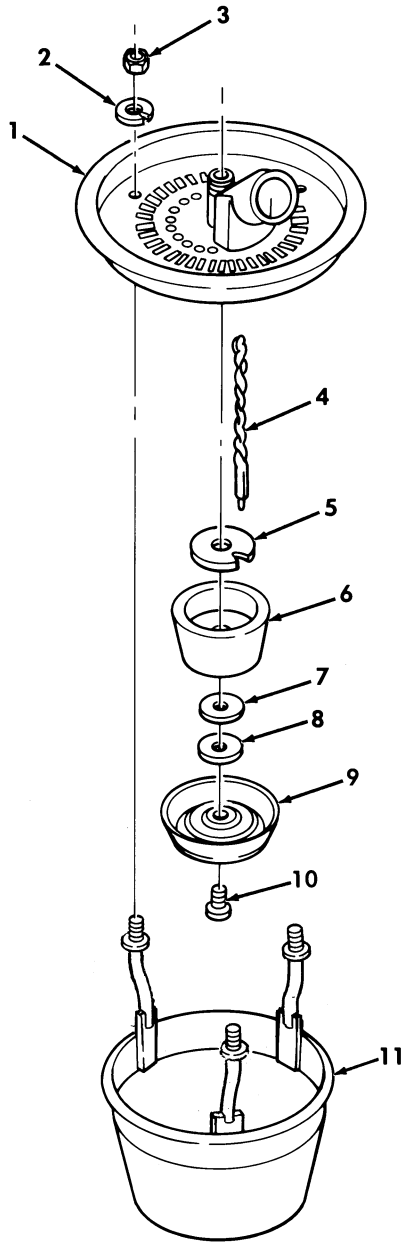

Figure 351. Burner Assembly, A-Model, M997, M997A1, and M997A2 Ambulance.

(1) ITEM NO	(2) SMR CODE	(3) NSN	(4) CAGEC	(5) PART NUMBER	(6) DESCRIPTION AND USABLE ON CODES(UOC)	(7) QTY
					GROUP 2202 ACCESSORY ITEMS	
					FIG. 351 BURNER ASSEMBLY,A-MODEL, M997,M997A1,AND M997A2 AMBULANCE	
1	PFFZZ	2540011650814	78385	G704284	HEADER PLATE ASSEMB PART OF KIT P/N 5704052..... UOC:A15,B15,H15	1
2	PFFZZ	5310010638522	78385	705237	WASHER,LOCK #8..... UOC:A15,B15,H15	3
3	PFFZZ	5310010573098	78385	705068	NUT,PLAIN,HEXAGON #8-32..... UOC:A15,B15,H15	3
4	KFFZZ		78385	705944	WICK PART OF KIT P/N 5704052..... UOC:A15,B15,H15	1
5	KFFZZ		78385	704191	WASHER,FIBER PART OF KIT P/N 5704052 UOC:A15,B15,H15	1
6	KFFZZ		78385	704192	VAPORIZER PART OF KIT P/N 5704052... UOC:A15,B15,H15	1
7	KFFZZ		78385	704678	WASHER,FLAT PART OF KIT P/N 5704052. UOC:A15,B15,H15	1
8	KFFZZ		78385	704190	WASHER PART OF KIT P/N 5704052..... UOC:A15,B15,H15	1
9	PFFZZ	2540011689482	78385	704181	SHIELD,FUEL VAPOR PART OF KIT P/N 5704052..... UOC:A15,B15,H15	1
10	PFFZZ	5305010978178	78385	704206	SCREW,MACHINE #8-32 X 1/4 PART OF KIT P/N 5704052..... UOC:A15,B15,H15	1
11	PFFZZ	2540011689481	78385	6706133	BURNER CUP AND STUD..... UOC:A15,B15,H15	1

END OF FIGURE

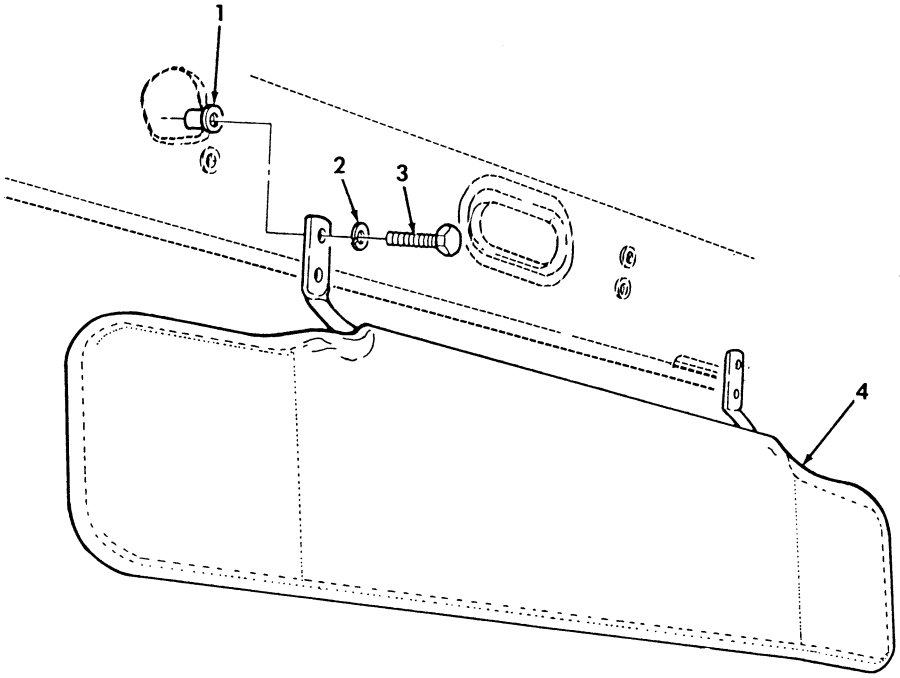

Figure 352. Sun Visor Assembly and Mounting Hardware.

(1) ITEM NO	(2) SMR CODE	(3) NSN	(4) CAGEC	(5) PART NUMBER	(6) DESCRIPTION AND USABLE ON CODES(UOC)	(7) QTY
					GROUP 2202 ACCESSORY ITEMS	
					FIG. 352 SUN VISOR ASSEMBLY AND MOUNTING HARDWARE	
1	PAOZZ	5310014113422	78276	ALS4-420-165	NUT,PLAIN,BLIND RIV..... UOC:BVY,B15,B20,B24,B25,C17,NNN	8
2	PAOZZ	5310006379541	96906	MS35338-46	WASHER,LOCK 3/8..... UOC:BVY,B15,B20,B24,B25,C17,NNN	8
3	PAOZZ	5305002253843	80204	B1821BH025C100N	SCREW,CAP,HEXAGON H 1/4-20 X 1.00.. UOC:A15,BVY,B20,B24,B25,C17,NNN	8
4	PAOZZ	2540014108793	34623	12446819	VISOR,SUN,VEHICLE..... UOC:BVY,B15,B20,B24,B25,C17,NNN	2

END OF FIGURE

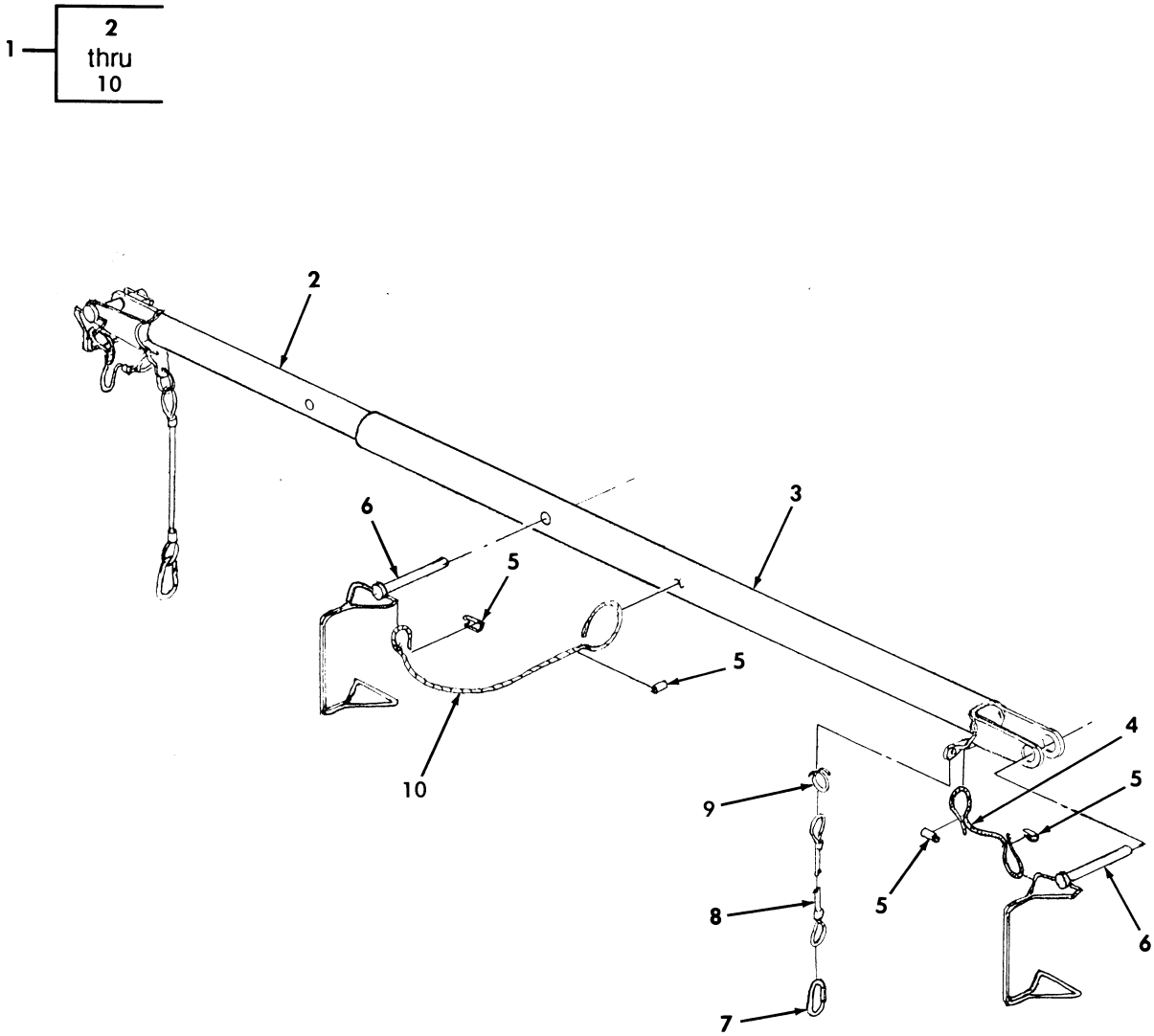

Figure 353. Ambulance Spreader Assembly.

(1) ITEM NO	(2) SMR CODE	(3) NSN	(4) CAGEC	(5) PART NUMBER	(6) DESCRIPTION AND USABLE ON CODES(UOC)	(7) QTY
					GROUP 2202 ACCESSORY ITEMS	
					FIG. 353 AMBULANCE SPREADER ASSEMBLY	
1	PAOZZ	4910013138839	19207	12342102	SPREADER,SLING..... UOC:A15,B15,B16,H15,H16	1
2	XAOZZ		19207	12342097	.EXTENSION BAR ASSY..... UOC:A15,B15,B16,H15,H16	1
3	XAOZZ		19207	12342099	.EXTENSION BAR ASSY..... UOC:A15,B15,B16,H15,H16	1
4	MOOZZ		19207	12342102-3	.CABLE MAKE FROM ROPE,WIRE P/N 8930T31, 10 INCHES LONG..... UOC:A15,B15,B16,H15,H16	2
* 5	PAOZZ	4030011248201	96906	MS51844-82	.SWAGING SLEEVE,WIRE..... UOC:A15,B15,B16,H15,H16	6
6	PAOZZ	5315014065019	19207	12342121	.PIN,STRAIGHT,HEADED..... UOC:A15,B15,B16,H15,H16	3
7	PAOZZ	5340011251682	39428	3933T22	.SNAP HOOK..... UOC:A15,B15,B16,H15,H16	2
8	PAOZZ	4010014066963	19207	12342141	.WIRE ROPE ASSEMBLY,..... UOC:A15,B15,B16,H15,H16	2
9	PAOZZ	4010014109099	19207	12342102-4	.LINK,CHAIN,LAP..... UOC:A15,B15,B16,H15,H16	2
10	MOOZZ		19207	12342102-2	.CABLE MAKE FROM ROPE,WIRE P/N 8930T31, 20 INCHES LONG..... UOC:A15,B15,B16,H15,H16	1

END OF FIGURE

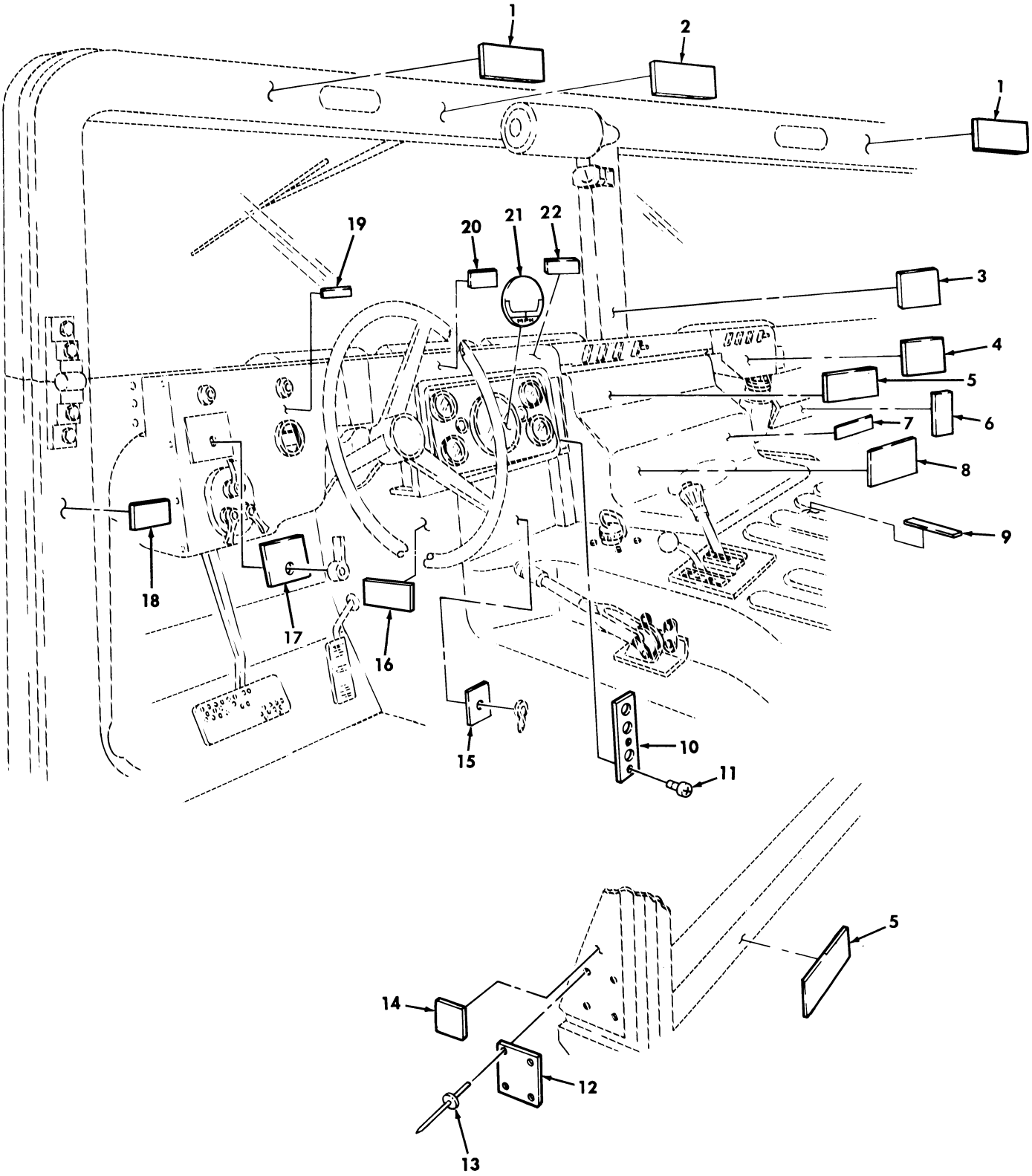

Figure 354. Data Plates, Dash Panel.

(1) ITEM NO	(2) SMR CODE	(3) NSN	(4) CAGEC	(5) PART NUMBER	(6) DESCRIPTION AND USABLE ON CODES(UOC)	(7) QTY
					GROUP 2210 DATA PLATES AND INSTRUCTION HOLDERS	
					FIG. 354 DATA PLATES,DASH PANEL	
1	PAOZZ	7690012040077	19207	12339053	DECAL..... UOC:A11,A15,A24,A25,A26,A27,B15,B16, B17,B18,B24,B25,C17,H11,H15,H16,H17, H18,H24,H25,H26,H27,MMM	2
2	PAOZZ	9905001982728	19207	11643398	PLATE,INSTRUCTION CAUTION,HIGH INTENSITY NOISE.....	1
3	PAOZZ	7690013158539	19207	12342165	MARKER,IDENTIFICATI VEHICLE BREAK-IN SERVICE.....	1
4	PFOZZ	7690014766089	19207	12447011	DECAL HEATER AIR CONTROL..... UOC:BVY,B15,B20,B24,B25,C17,NNN	1
4	PFOZZ	9905012039994	19207	12339100	PLATE,INSTRUCTION HEATER AIR CONTROL..... UOC:AVY,A11,A13,A14,A15,A20,A24,A25, A26,A27,B16,B17,B18,HVY,H11,H13,H14, H15,H16,H17,H18,H20,H21,H24,H25,H26, H27,H28,MMM	1
5	PAOZZ	9905011934065	19207	12339106	PLATE,INSTRUCTION SEAT BELT RETRACTOR,USBL EFF 1 THRU 99,999.... UOC:H11,H13,H14,H15,H16,H17,H18,H20, H21,H24,H25,H26,H27,H28,MMM	4
6	PAOZZ	7690012912974	34623	5597689	DECAL TIEDOWN DATA..... UOC:AVY,A11,A13,A14,A15,A20,A24,A25, A26,A27,B16,B17,B18,HVY,H11,H13,H14, H15,H16,H17,H18,H20,H21,H24,H25,H26, H27,H28,MMM	1
6	PFOZZ	9905014338554	19207	12460205	PLATE,INSTRUCTION TIEDOWN DATA..... UOC:BVY,B15,B20,B24,B25,C17,NNN	1
7	PAOZZ	9905012487657	19207	12339111	PLATE,INSTRUCTION SERVICE DATA..... UOC:AVY,A11,A13,A14,A15,A20,A24,A25, A26,A27,B16,B17,B18,HVY,H11,H13,H14, H15,H16,H17,H18,H20,H21,H24,H25,H26, H27,H28,MMM	1
7	PAOZZ	7690014766101	19207	12460157	DECAL SERVICE DATA..... UOC:BVY,B15,B20,B24,B25,C17,NNN	1
8	PFOZZ	9905012245860	19207	12339080	PLATE,INSTRUCTION OPERATING INSTRUCTION..... UOC:HVY,H11,H13,H14,H15,H16,H17,H18, H20,H21,H24,H25,H26,H27,H28,MMM	1
8	PFOZZ	9905013933794	19207	12343058	PLATE,INSTRUCTION OPERATING INSTRUCTIONS..... UOC:AVY,A11,A13,A14,A15,A20,A24,A25, A26,A27,B16,B17,B18,	1
8	PFOZZ	7690014766507	19207	12460156	DECAL OPERATING INSTRUCTION..... UOC:BVY,B15,B20,B24,B25,C17,NNN	1
9	PAOZZ	9905012047776	19207	12340910	PLATE,IDENTIFICATIO FIRE EXTINGUISHER.....	1
10	PFOZZ	7690014766510	19207	12447003	DECAL..... UOC:BVY,B15,B20,B24,B25,C17,NNN	1

(1) ITEM NO	(2) SMR CODE	(3) NSN	(4) CAGEC	(5) PART NUMBER	(6) DESCRIPTION AND USABLE ON CODES(UOC)	(7) QTY
10	PFOZZ	9905012039992	19207	12338470	PLATE,INSTRUCTION..... UOC:AVY,A11,A13,A14,A15,A20,A24,A25, A26,A27,B16,B17,B18,HVY,H11,H13,H14, H15,H16,H17,H18,H20,H21,H24,H25,H26, H27,H28,MMM	1
11	PAOZZ	5305009846191	96906	MS35206-243	SCREW,MACHINE #8-32 X 3/8.....	2
12	PFOZZ	9905013647342	19207	12342652	PLATE,IDENTIFICATIO NAME PLATE M1097..... UOC:HVY	1
12	PAOZZ	9905011853129	19207	12340868	PLATE,IDENTIFICATIO NAME PLATE M998 UOC:H13	1
12	PAOZZ	9905011853131	19207	12339085	PLATE,IDENTIFICATIO NAME PLATE M996 UOC:H16	1
12	PFOZZ	9905011853132	19207	12339077	PLATE,IDENTIFICATIO NAME PLATE M997 UOC:H15	1
12	PFOZZ	9905011853134	19207	12339082	PLATE,IDENTIFICATIO NAME PLATE M966 UOC:H11	1
12	PAOZZ	9905011863253	19207	12339110	PLATE,IDENTIFICATIO..... UOC:H17	1
12	PFOZZ	9905011863255	19207	12339090	PLATE,IDENTIFICATIO NAME PLATE M1026..... UOC:H18	1
12	PFOZZ	9905011857972	19207	12339095	PLATE,IDENTIFICATIO NAME PLATE M1035..... UOC:H20	1
12	PFOZZ	9905011863259	19207	12339104	PLATE,IDENTIFICATIO NAME PLATE M1037..... UOC:H21	1
12	PFOZZ	9905011908425	19207	12340867	PLATE,IDENTIFICATIO NAME PLATE M1038..... UOC:H14	1
12	PFOZZ	9905011908427	19207	12341812	PLATE,IDENTIFICATIO NAME PLATE M1042..... UOC:H28	1
12	PFOZZ	9905011853138	19207	12339076	PLATE,IDENTIFICATIO NAME PLATE, M1045..... UOC:H24	1
12	PFOZZ	9905011853139	19207	12339099	PLATE,IDENTIFICATIO NAME PLATE M1043..... UOC:H25	1
12	PFOZZ	9905011857973	19207	12339091	PLATE,IDENTIFICATIO NAME PLATE M1044..... UOC:H26	1
12	PFOZZ	9905011857975	19207	12339096	PLATE,IDENTIFICATIO NAME PLATE M1046..... UOC:H27	1
12	PFOZZ	9905013852639	19207	12343020	PLATE,IDENTIFICATIO NAME PLATE M1097A1..... UOC:AVY	1
12	PFOZZ	9905013872761	19207	12342986	PLATE,IDENTIFICATIO NAME PLATE M966A1..... UOC:A11	1
12	PFOZZ	9905013845311	19207	12342981	PLATE,IDENTIFICATIO NAME PLATE	1

(1) ITEM NO	(2) SMR CODE	(3) NSN	(4) CAGEC	(5) PART NUMBER	(6) DESCRIPTION AND USABLE ON CODES(UOC)	(7) QTY
					M998A1.....	
					UOC:A13	
12	PFOZZ	9905013872762	19207	12343044	PLATE,IDENTIFICATIO NAME PLATE	1
					M1038A1.....	
					UOC:A14	
12	PFOZZ	9905013871145	19207	12343010	PLATE,IDENTIFICATIO NAME PLATE	1
					M997A1.....	
					UOC:A15	
12	PFOZZ	9905013935622	19207	12343002	PLATE,IDENTIFICATIO NAME PLATE	1
					M1035A1.....	
					UOC:A20	
12	PFOZZ	9905013872752	19207	12342995	PLATE,IDENTIFICATIO NAME PLATE	1
					M1045A1.....	
12	PFOZZ	9905013939357	19207	12342997	PLATE,IDENTIFICATIO NAME PLATE	1
					M1043A1.....	
					UOC:A25	
12	PFOZZ	9905013935623	19207	12343050	PLATE,IDENTIFICATIO NAME PLATE	1
					M1044A1.....	
					UOC:A26	
12	PFOZZ	9905013871146	19207	12343046	PLATE,IDENTIFICATIO NAME PLATE	1
					M1046A1.....	
					UOC:A27	
12	PFOZZ	9905013872746	19207	12343023	PLATE,IDENTIFICATIO NAME PLATE	1
					M996A1.....	
					UOC:B16	
12	PFOZZ	9905013976974	19207	12342992	PLATE,IDENTIFICATIO NAME PLATE	1
					M1025A1.....	
					UOC:B17	
12	PFOZZ	9905013852633	19207	12343041	PLATE,IDENTIFICATIO NAME PLATE	1
					M1026A1.....	
					UOC:B18	
12	PFOZZ	7690014588254	19207	12446780	DECAL NAME PLATE M1097A2.....	1
					UOC:BVY	
12	PFOZZ	7690014505481	19207	12446798	DECAL NAME PLATE M997A2.....	1
					UOC:B15	
12	PFOZZ	9905014465770	19207	12446792	PLATE,IDENTIFICATIO NAME PLATE	1
					M1035A2.....	
					UOC:B20	
12	PFOZZ	9905014489786	19207	12446789	PLATE,IDENTIFICATIO NAME PLATE	1
					M1045A2.....	
					UOC:B24	
12	PFOZZ	9905014477799	19207	12446786	PLATE,IDENTIFICATIO NAME PLATE	1
					M1043A2.....	
					UOC:B25	
12	PFOZZ	9905014465769	19207	12446783	PLATE,IDENTIFICATIO NAME PLATE	1
					M1025A2.....	
					UOC:C17	
12	PFOZZ	7690014762855	34623	EX5061	DECAL NAME PLATE M1123.....	1
					UOC:NNN	
12	PFOZZ	7690014814908	19207	12469101	DECAL.....	1
					UOC:MMM	
13	PAOZZ	5320000835009	81349	M24243/1-A403	RIVET,BLIND 1/8 DIA.,.126-.187 GRIP	4
14	PFOZZ	7690013828471	19207	12343054	DECAL DRIVER SEAT ADJUSTMENT.....	1

(1) ITEM NO	(2) SMR CODE	(3) NSN	(4) CAGEC	(5) PART NUMBER	(6) DESCRIPTION AND USABLE ON CODES(UOC)	(7) QTY
					UOC:AVY,A11,A13,A14,A15,A20,A24,A25, A26,A27,BVY,B15,B16,B17,B18,B20,B24, B25,C17,NNN	
14	PAOZZ	9905012039995	19207	12339101	PLATE,INSTRUCTION DRIVER SEAT ADJUSTMENT..... UOC:HVY,H11,H13,H14,H15,H16,H17,H18, H20,H21,H24,H25,H26,H27,H28,MMM	1
15	PFOZZ	9905012058635	19207	12339109	PLATE,IDENTIFICATIO DEEP WATER FORDING..... UOC:AVY,A11,A13,A14,A15,A20,A24,A25, A26,A27,BVY,B15,B16,B17,B18,B20,B24, B25,C17,HVY,H11,H13,H14,H15,H16,H17, H18,H20,H21,H24,H25,H26,H27,H28,MMM, NNN	1
16	PAOZZ	7690014762842	34623	EX5079	DECAL BARCODE M1123..... UOC:NNN	1
17	PAOZZ	9905012039996	19207	12338475	PLATE,INSTRUCTION IGNITION..... UOC:AVY,A11,A13,A20,A24,BVY,B15,B20, B24,B25,C17,HVY,H11,H13,H14,H15,H16, H17,H18,H20,H21,H24,H25,H26,H27,H28, MMM,NNN	1
18	PAOZZ	7690012040076	19207	12339063	DECAL RIFLE,M16..... UOC:A11,A24,A25,A26,A27,H11,H24,H25, H26,H27,MMM	2
* 19	PFOZZ	9905012491612	19207	12340027	PLATE,INSTRUCTION NEUTRAL START.... UOC:AVY,A11,A13,A14,A15,A20,A24,A25, A26,A27,B16,B17,B18,HVY,H11,H13,H14, HVY,H11,H13,H14,H15,H16,H17,H18,H20, H21,H24,H25,H26,H27,H28,MMM	1
20	PAOZZ	9905011857977	19207	12339105	PLATE,INSTRUCTION STEERING WHEEL LOCKING DEVICE.....	1
21	PAOZZ	7690012564908	19207	12340652	DECAL SPEEDOMETER.....	1
22	PAOZZ	7690012564909	19207	12340917	DECAL HAND THROTTLE CONTROL.....	1

END OF FIGURE

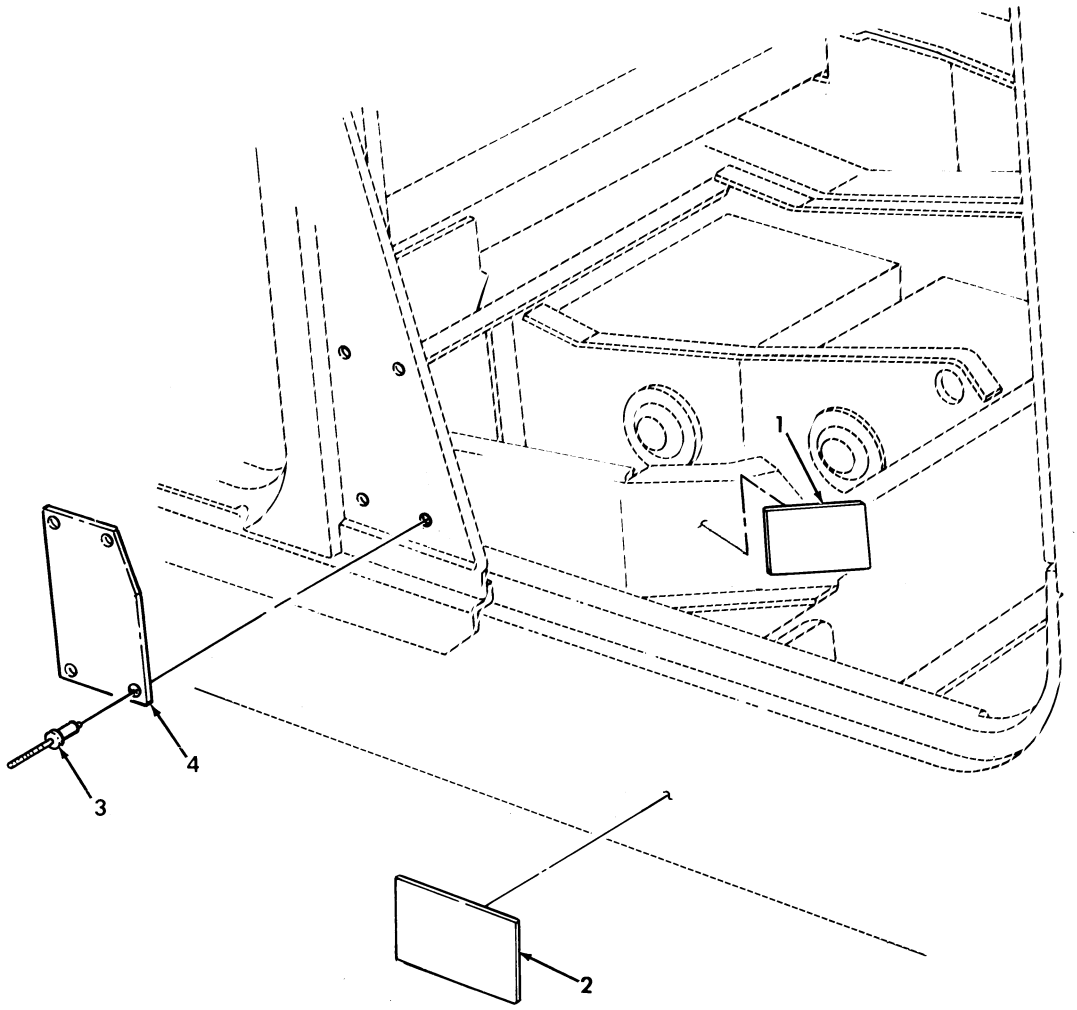

Figure 355. Data Plates, Battery Cable and Slave Receptacle.

(1) ITEM NO	(2) SMR CODE	(3) NSN	(4) CAGEC	(5) PART NUMBER	(6) DESCRIPTION AND USABLE ON CODES(UOC)	(7) QTY
					GROUP 2210 DATA PLATES AND INSTRUCTION HOLDERS	
					FIG. 355 DATA PLATES,BATTERY CABLE AND SLAVE RECEPTACLE	
1	PAOZZ	9905011853143	19207	12339107	PLATE,INSTRUCTION CONNECTING BATTERY CABLES.....	1
2	PFOZZ	9905011879468	19207	12339087	PLATE,INSTRUCTION SLAVE RECEPTACLE.	1
3	PAOZZ	5320000835009	81349	M24243/1-A403	RIVET,BLIND 1/8 DIA.,.126-.187 GRIP,USBL EFF 100,000 AND ABOVE.....	4
3	PAOZZ	5320010195694	81349	M24243/1A402	RIVET,BLIND 1/8 DIA.,.063-.125 GRIP,USBL EFF 1 THRU 99,999..... UOC:H11,H13,H14,H15,H16,H17,H18,H20, H21,H24,H25,H26,H27,H28,MMM	4
4	PAOZZ	9905013622014	19207	12342653	PLATE,IDENTIFICATIO WEIGHT AND DIMENSIONAL DATA..... UOC:HVY	1
4	PFOZZ	9905012489544	19207	12339900	PLATE,IDENTIFICATIO WEIGHT AND DIMENSIONAL DATA..... UOC:H13	1
4	PFOZZ	9905012481111	19207	12340653	PLATE,IDENTIFICATIO WEIGHT AND DIMENSIONAL DATA..... UOC:H16	1
4	PFOZZ	9905012481112	19207	12340322	PLATE,IDENTIFICATIO WEIGHT AND DIMENSIONAL DATA..... UOC:H11	1
4	PFOZZ	9905012489543	19207	12340321	PLATE,IDENTIFICATIO WEIGHT AND DIMENSIONAL DATA..... UOC:H17	1
4	PFOZZ	9905011857970	19207	12340323	PLATE,IDENTIFICATIO WEIGHT AND DIMENSIONAL DATA..... UOC:H15	1
4	PFOZZ	9905012481113	19207	12340318	PLATE,IDENTIFICATIO WEIGHT AND DIMENSIONAL DATA..... UOC:H18	1
4	PFOZZ	9905012481114	19207	12340320	PLATE,IDENTIFICATIO WEIGHT AND DIMENSIONAL DATA..... UOC:H20	1
4	PFOZZ	9905012489545	19207	12339987	PLATE,IDENTIFICATIO WEIGHT AND DIMENSIONAL DATA..... UOC:H21	1
4	PFOZZ	9905012489546	19207	12339901	PLATE,IDENTIFICATIO WEIGHT AND DIMENSIONAL DATA..... UOC:H14	1
4	PFOZZ	9905012489547	19207	12341836	PLATE,IDENTIFICATIO WEIGHT AND DIMENSIONAL DATA..... UOC:H28	1
4	PFOZZ	9905012489548	19207	12340324	PLATE,IDENTIFICATIO WEIGHT AND DIMENSIONAL DATA..... UOC:H25	1
4	PFOZZ	9905012489549	19207	12340325	PLATE,IDENTIFICATIO WEIGHT AND DIMENSIONAL DATA.....	1

(1) ITEM NO	(2) SMR CODE	(3) NSN	(4) CAGEC	(5) PART NUMBER	(6) DESCRIPTION AND USABLE ON CODES(UOC)	(7) QTY
					UOC:H26	
4	PFOZZ	9905012489552	19207	12340326	PLATE,INSTRUCTION WEIGHT AND DIMENSIONAL DATA.....	1
					UOC:H24	
4	PFOZZ	9905012481115	19207	12340327	PLATE,IDENTIFICATIO WEIGHT AND DIMENSIONAL DATA.....	1
					UOC:H27	
4	PFOZZ	9905013933795	19207	12342987	PLATE,IDENTIFICATIO WEIGHT AND DIMENSIONAL DATA.....	1
					UOC:A11	
4	PFOZZ	9905013925795	19207	12342980	PLATE,IDENTIFICATIO WEIGHT AND DIMENSIONAL DATA.....	1
					UOC:A13	
4	PFOZZ	9905013925794	19207	12343043	PLATE,INSTRUCTION WEIGHT AND DIMENSIONAL DATA.....	1
					UOC:A14	
4	PFOZZ	9905013925797	19207	12343011	PLATE,IDENTIFICATIO WEIGHT AND DIMENSIONAL DATA.....	1
					UOC:A15	
4	PFOZZ	9905013925798	19207	12343001	PLATE,IDENTIFICATIO WEIGHT AND DIMENSIONAL DATA.....	1
					UOC:A20	
4	PFOZZ	9905013925796	19207	12342993	PLATE,IDENTIFICATIO WEIGHT AND DIMENSIONAL DATA.....	1
					UOC:A24	
4	PFOZZ	9905013931830	19207	12342999	PLATE,IDENTIFICATIO IDENTIFICATION, WEIGHT AND DIMENSIONAL DATA.....	1
					UOC:A25	
4	PFOZZ	9905013925796	19207	12343049	PLATE,IDENTIFICATIO WEIGHT AND DIMENSIONAL DATA.....	1
					UOC:A26	
4	PFOZZ	9905013931833	19207	12343048	PLATE,IDENTIFICATIO WEIGHT AND DIMENSIONAL DATA.....	1
					UOC:A27	
4	PFOZZ	9905013937128	19207	12343018	PLATE,IDENTIFICATIO WEIGHT AND DIMENSIONAL DATA.....	1
					UOC:AVY	
4	PFOZZ	9905013925799	19207	12343025	PLATE,IDENTIFICATIO WEIGHT AND DIMENSIONAL DATA.....	1
					UOC:B16	
4	PFOZZ	9905013931834	19207	12342991	PLATE,IDENTIFICATIO WEIGHT AND DIMENSIONAL DATA.....	1
					UOC:B17	
4	PFOZZ	9905013925800	19207	12343040	PLATE,IDENTIFICATIO WEIGHT AND DIMENSIONAL DATA.....	1
					UOC:B18	
4	PFOZZ	9905014489783	19207	12446782	PLATE,INSTRUCTION WEIGHT AND DIMENSIONAL DATA.....	1
					UOC:BVY	
4	PFOZZ	9905014490476	19207	12446801	PLATE,INSTRUCTION WEIGHT AND DIMENSIONAL DATA.....	1
					UOC:B15	
4	PFOZZ	9905014465771	19207	12446794	PLATE,INSTRUCTION WEIGHT AND	1

(1) ITEM NO	(2) SMR CODE	(3) NSN	(4) CAGEC	(5) PART NUMBER	(6) DESCRIPTION AND USABLE ON CODES(UOC)	(7) QTY
					DIMENSIONAL DATA.....	
					UOC:B20	
4	PFOZZ	9905014465768	19207	12446791	PLATE,IDENTIFICATIO WEIGHT AND	1
					DIMENSIONAL DATA.....	
					UOC:B24	
4	PFOZZ	9905014489784	19207	12446788	PLATE,INSTRUCTION WEIGHT AND	1
					DIMENSIONAL DATA.....	
					UOC:B25	
4	PFOZZ	9905014466187	19207	12446785	PLATE,INSTRUCTION WEIGHT AND	1
					DIMENSIONAL DATA.....	
					UOC:C17	
* 4	PFOZZ	7690014814906	19207	12469100	DECAL.....	1
					UOC:MMM	
* 4	PFOZZ	9905014860051	19207	12469323	PLATE,INSTRUCTION.....	1
					UOC:NNN	

END OF FIGURE

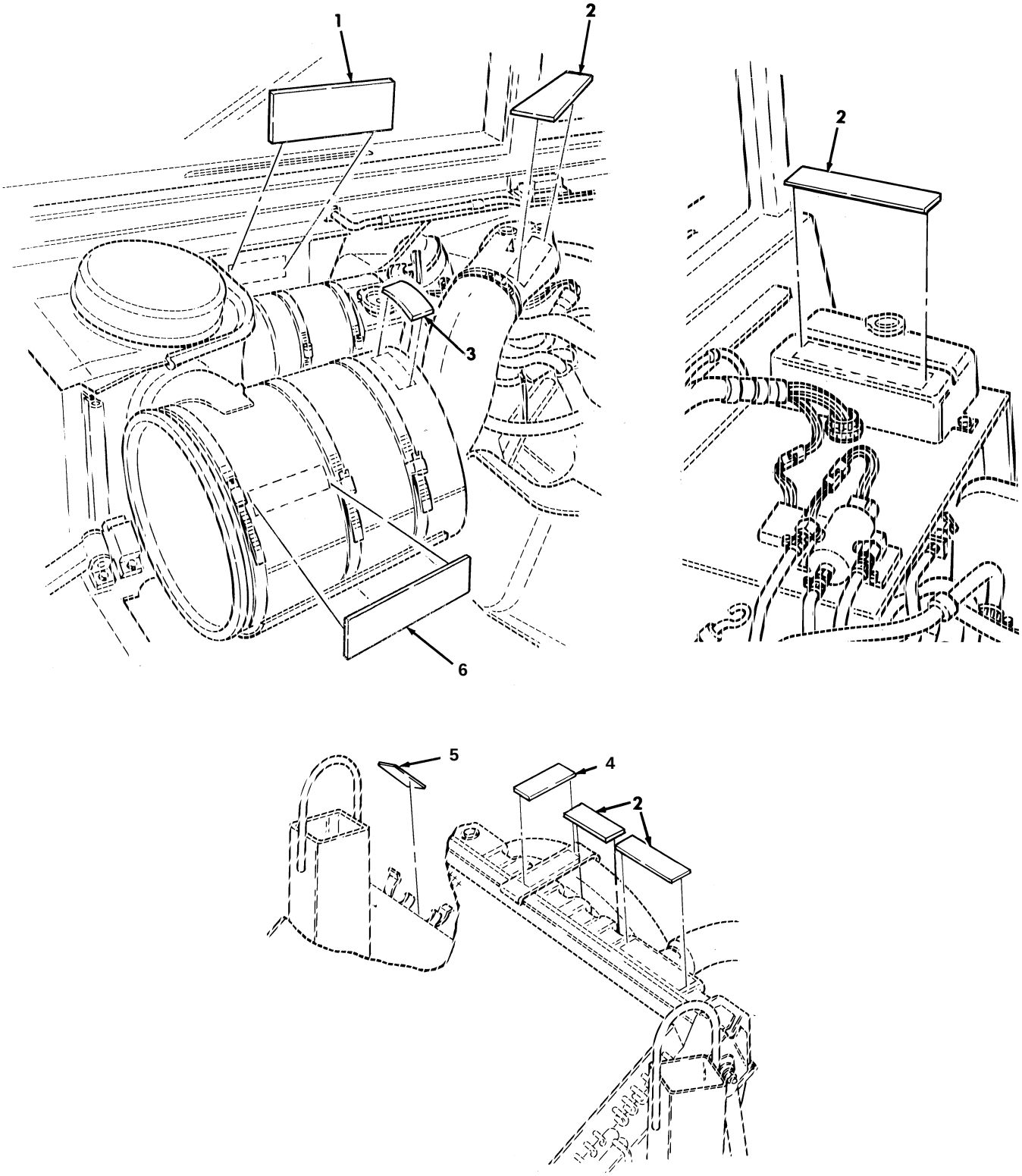

Figure 356. Data Plates, Surge Tank, Fan Shroud, and Cook Stove.

(1) ITEM NO	(2) SMR CODE	(3) NSN	(4) CAGEC	(5) PART NUMBER	(6) DESCRIPTION AND USABLE ON CODES(UOC)	(7) QTY
					GROUP 2210 DATA PLATES AND INSTRUCTION HOLDERS	
					FIG. 356 DATA PLATES,SURGE TANK,FAN SHROUD,AND COOK STOVE	
1	PAOZZ	7690012090864	19207	12339065	MARKER,IDENTIFICATI SURGE TANK.....	1
2	PAOZZ	9905012489550	19207	12339055	PLATE,INSTRUCTION NO STEP.....	4
3	PAOZZ	7690014734550	34623	EX4319	DECAL SERPENTINE BELT..... UOC:BVY,B15,B20,B24,B25,C17,NNN	1
4	PAOZZ	7690011975500	19207	12339064	DECAL FAN SHROUD.....	2
5	PAOZZ	7690011885144	19207	12340909	MARKER,IDENTIFICATI GASOLINE BURNER STOVE STOWAGE..... UOC:A11,A24,A27,H11,H24,H27,MMM	1
6	PAOZZ	9905012489551	34623	5590177	PLATE,INSTRUCTION NO STEP.....	1

END OF FIGURE

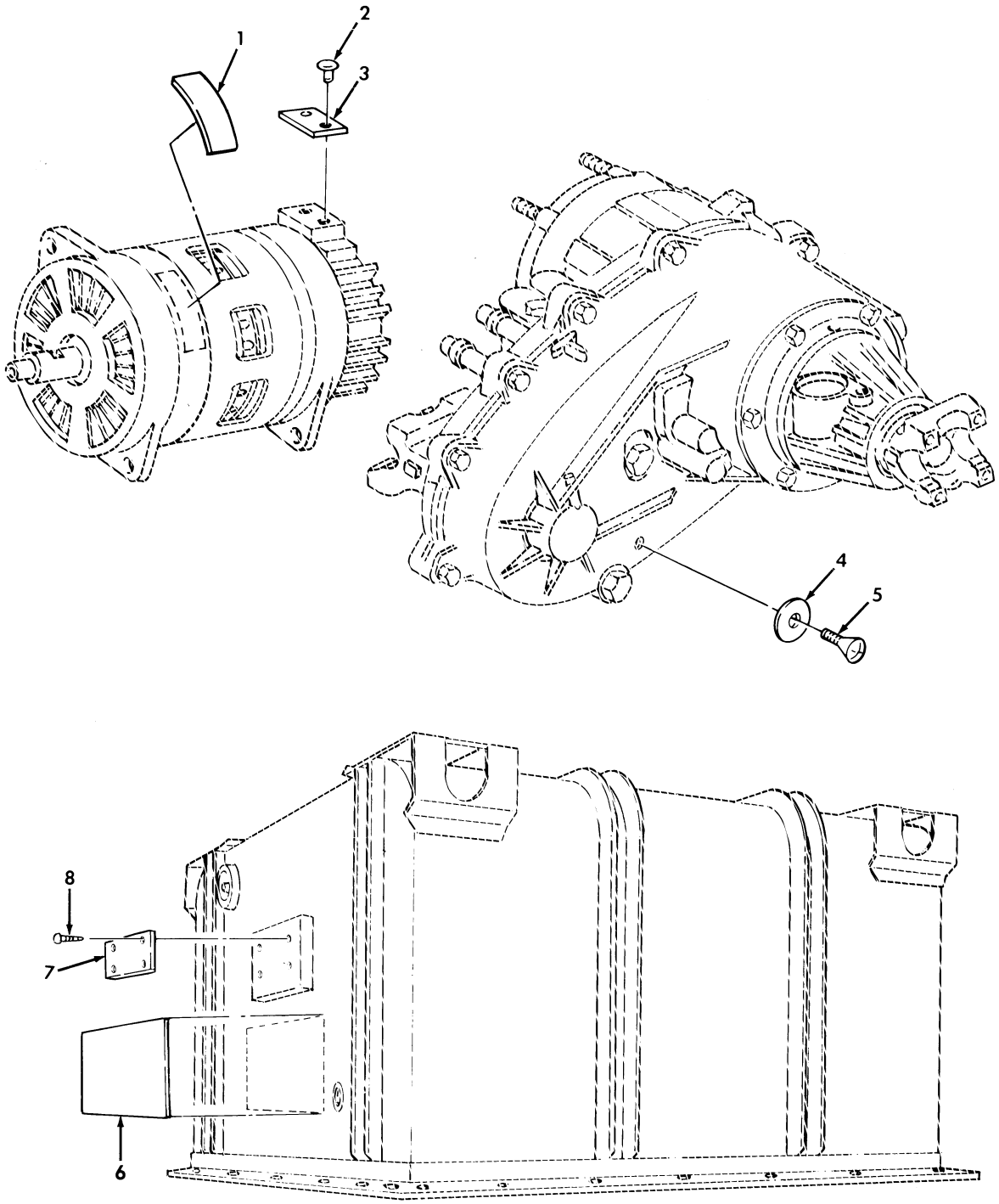

Figure 357. Data Plates, Generator, Transfer Case, and Engine Container.

(1) ITEM NO	(2) SMR CODE	(3) NSN	(4) CAGEC	(5) PART NUMBER	(6) DESCRIPTION AND USABLE ON CODES(UOC)	(7) QTY
					GROUP 2210 DATA PLATES AND INSTRUCTION HOLDERS	
					FIG. 357 DATA PLATES,GENERATOR, TRANSFER CASE,AND ENGINE CONTAINER	
1	PAOZZ	7690011975500	19207	12339064	DECAL FAN SHROUD.....	1
2	PAOZZ	5320009572500	96906	MS20604B4W1	RIVET,BLIND 1/8 DIA.,.015-.062 GRIP	2
3	PFOZZ	9905011819456	19207	11630585	PLATE,INSTRUCTION.....	1
4	PFOZZ	9905011587981	34623	5741083	PLATE,IDENTIFICATIO TRANSFER CASE..	1
5	PAOZZ	5305012117415	34623	5741084	SCREW,CAP,HEXAGON H #10-32 X 1/4...	1
6	PAOZZ	7690012818341	19207	12338072	DECAL ENGINE CONTAINER.....	1
7	PAOZZ	9905009012942	19207	7973326	PLATE,IDENTIFICATIO ENGINE CONTAINER.....	1
8	PAOZZ	5305002535627	80205	MS21318-48	SCREW,DRIVE #10-8 X 5/8.....	4

END OF FIGURE

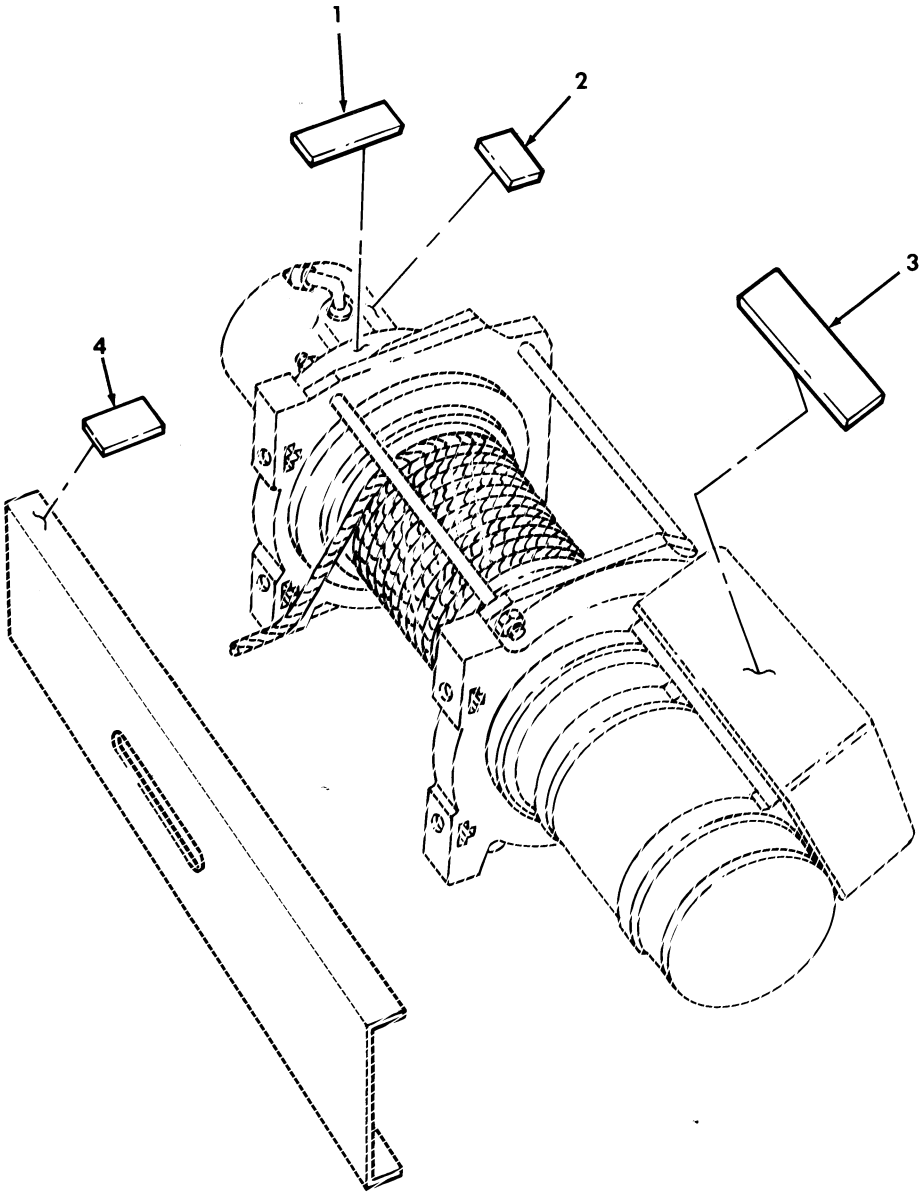

Figure 358. Data Plates, Winch.

(1) ITEM NO	(2) SMR CODE	(3) NSN	(4) CAGEC	(5) PART NUMBER	(6) DESCRIPTION AND USABLE ON CODES(UOC)	(7) QTY
					GROUP 2210 DATA PLATES AND INSTRUCTION HOLDERS	
					FIG. 358 DATA PLATES,WINCH	
1	PAOZZ	7690011853208	27647	15657	MARKER,IDENTIFICATI..... UOC:A14,A26,A27,B18,H14,H18,H26,H27, H28	1
2	PFOZZ	9905011853127	27647	15873	PLATE,INSTRUCTION..... UOC:A14,A26,A27,B18,H14,H18,H26,H27, H28	1
3	PAOZZ	9905011853207	27647	13698	PLATE,INSTRUCTION..... UOC:A14,A26,A27,B18,H14,H18,H26,H27, H28	1
4	PAOZZ	7690012646536	19207	12340923	DECAL WINCH OPERATION, USBL EFF 1 THRU 99,999..... UOC:H14,H18,H26,H27,H28	1
4	PAOZZ	7690013502094	19207	12342439	MARKER,IDENTIFICATI WARNING,WINCH OPERATION USBL EFF 100,000 AND ABOVE UOC:A14,A26,A27,B18,H14,H18,H26,H27, H28	1

END OF FIGURE

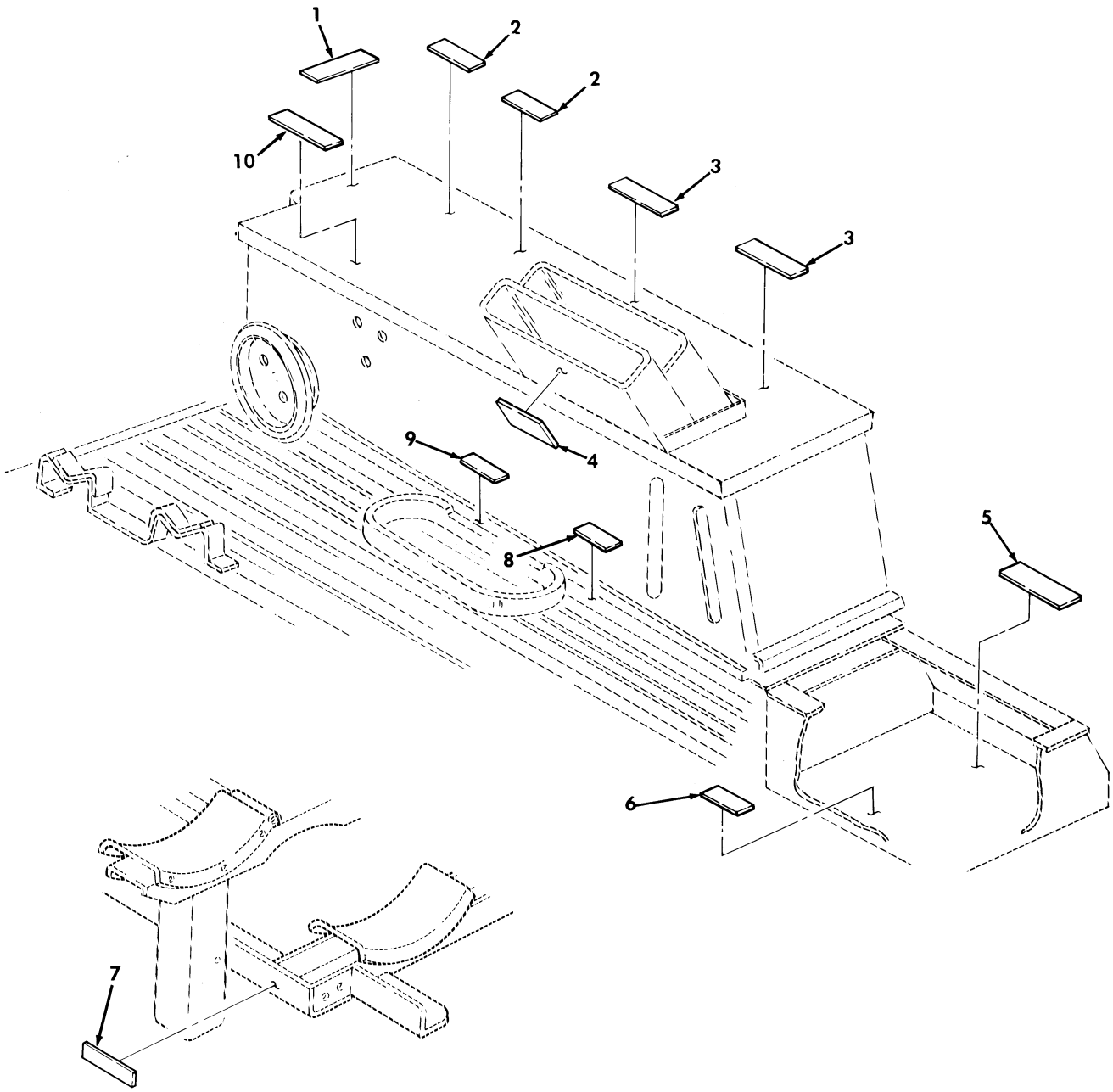

Figure 359. Data Plates, TOW Carrier.

(1) ITEM NO	(2) SMR CODE	(3) NSN	(4) CAGEC	(5) PART NUMBER	(6) DESCRIPTION AND USABLE ON CODES(UOC)	(7) QTY
					GROUP 2210 DATA PLATES AND INSTRUCTION HOLDERS	
					FIG. 359 DATA PLATES,TOW CARRIER	
1	PAOZZ	7690011911313	19207	12340898	MARKER,IDENTIFICATI TELEPHONE STOWAGE..... UOC:A11,A24,A27,B24,H11,H24,H27,MMM	1
2	PAOZZ	7690011893740	19207	12340899	MARKER,IDENTIFICATI COMBAT RATIONS STOWAGE..... UOC:A11,A24,A27,B24,H11,H24,H27,MMM	2
3	PAOZZ	7690011926371	19207	12340901	MARKER,IDENTIFICATI M-16 AMMUNITION STOWAGE..... UOC:A11,A24,A27,B24,H11,H24,H27,MMM	2
4	PAOZZ	7690011918793	19207	12340890	MARKER,IDENTIFICATI MGS BATTERY STOWAGE..... UOC:A11,A24,A27,B24,H11,H24,H27,MMM	1
5	PAOZZ	7690011908501	19207	12340904	MARKER,IDENTIFICATI CBR OVERGARMENTS STOWAGE..... UOC:A11,A24,A27,B24,H11,H24,H27,MMM	1
6	PAOZZ	7690011911312	19207	12340908	MARKER,IDENTIFICATI CHEMICAL MASK STOWAGE..... UOC:A11,A24,A27,B24,H11,H24,H27,MMM	1
7	PAOZZ	7690011916467	19207	12339764	MARKER,IDENTIFICATI NOSE END MISSILE RACK..... UOC:A11,A24,A27,B24,H11,H24,H27,MMM	1
8	PAOZZ	7690011911316	19207	12340903	MARKER,IDENTIFICATI WATER CAN STOWAGE..... UOC:A11,A24,A27,B24,H11,H24,H27,MMM	1
9	PAOZZ	7690011911315	19207	12340902	MARKER,IDENTIFICATI FUEL CAN..... UOC:A11,A24,A27,B24,H11,H24,H27,MMM	1
10	PAOZZ	7690011911314	19207	12340900	MARKER,IDENTIFICATI CABLE REEL STOWAGE..... UOC:A11,A24,A27,B24,H11,H24,H27,MMM	1

END OF FIGURE

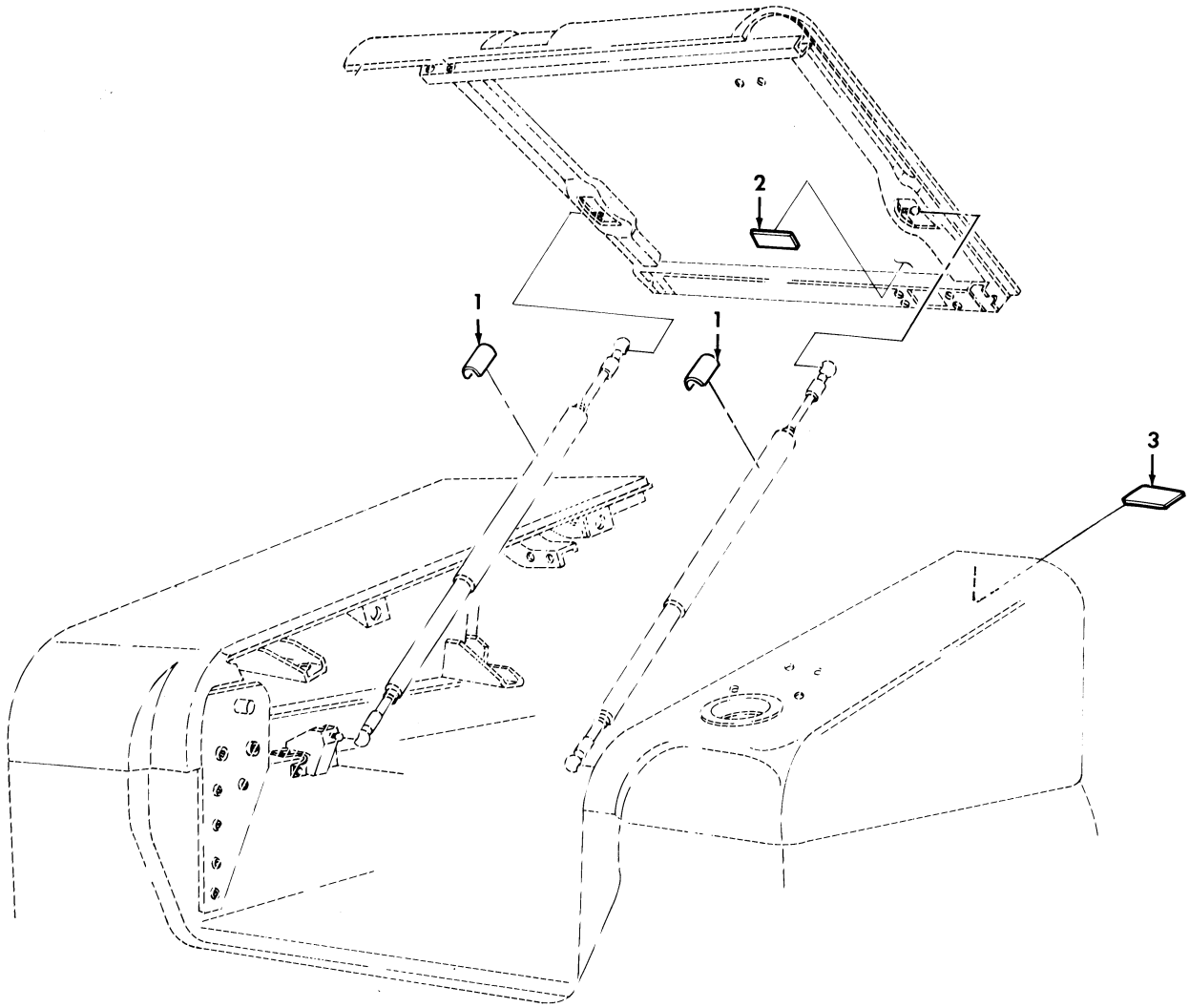

Figure 360. Data Plates, TOW Carrier.

(1) ITEM NO	(2) SMR CODE	(3) NSN	(4) CAGEC	(5) PART NUMBER	(6) DESCRIPTION AND USABLE ON CODES(UOC)	(7) QTY
					GROUP 2210 DATA PLATES AND INSTRUCTION HOLDERS	
					FIG. 360 DATA PLATES,TOW CARRIER	
1	PAOZZ	7690012047785	19207	12340814	DECAL NO HAND HOLD..... UOC:A11,A24,A25,A26,A27,B17,B18,B24, B25,C17,H11,H17,H18,H24,H25,H26,H27, MMM	2
2	PAOZZ	7690012047847	19207	12340852	MARKER,IDENTIFICATI..... UOC:A11,A24,A27,B24,H11,H13,H14,H15, H16,H17,H18,H20,H21,H24,H25,H26,H27, MMM	1
3	PAOZZ	7690011908501	19207	12340904	MARKER,IDENTIFICATI CBR OVER GARMENTS..... UOC:A11,A24,A25,A26,A27,B17,B18,B24, B25,C17,H11,H17,H18,H24,H25,H26,H27, MMM	2

END OF FIGURE

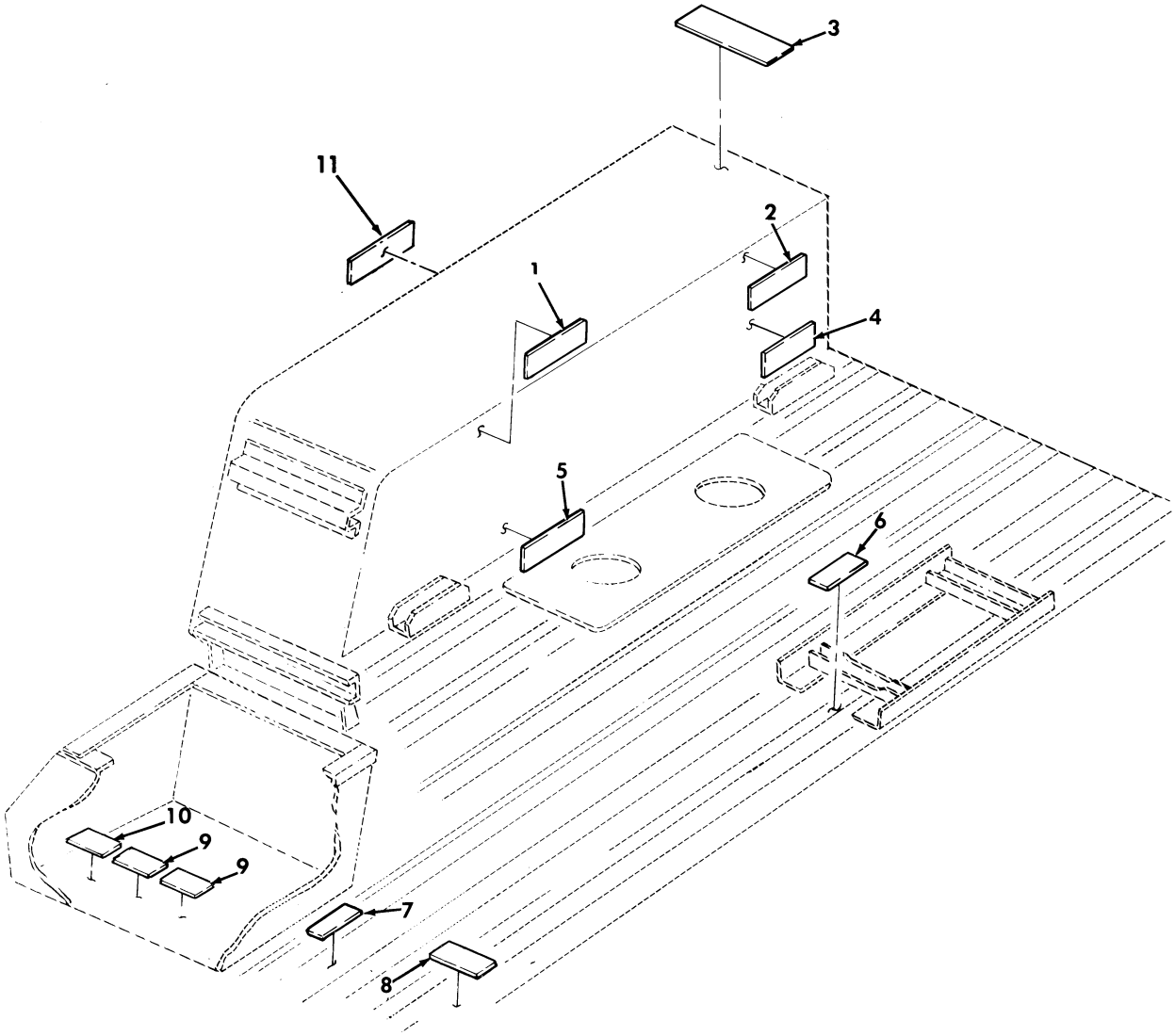

Figure 361. Data Plates, Sights, Traversing Unit, Night Vision Goggles, and Radiac Meter.

(1) ITEM NO	(2) SMR CODE	(3) NSN	(4) CAGEC	(5) PART NUMBER	(6) DESCRIPTION AND USABLE ON CODES(UOC)	(7) QTY
					GROUP 2210 DATA PLATES AND INSTRUCTION HOLDERS	
					FIG. 361 DATA PLATES,SIGHTS,TRAVERSING UNIT,NIGHT VISION GOGGLES,AND RADIAC METER	
1	PAOZZ	7690011893738	19207	12340894	MARKER,IDENTIFICATI NIGHT SIGHT STOWAGE..... UOC:A11,A24,A27,B24,H11,H24,H27,MMM	1
2	PAOZZ	7690011893737	19207	12340891	MARKER,IDENTIFICATI BORESIGHT COLLIMATOR STOWAGE..... UOC:A11,A24,A27,B24,H11,H24,H27,MMM	1
3	PAOZZ	7690011893740	19207	12340899	MARKER,IDENTIFICATI COMBAT RATIONS. UOC:A11,A24,A27,B24,H11,H24,H27,MMM	1
4	PAOZZ	7690012030161	19207	12340896	DECAL NIGHT SIGHT BATTERY STOWAGE.. UOC:A11,A24,A27,B24,H11,H24,H27,MMM	1
5	PAOZZ	7690011893739	19207	12340897	MARKER,IDENTIFICATI NIGHT SIGHT COOLANT STOWAGE..... UOC:A11,A24,A27,B24,H11,H24,H27,MMM	1
6	PAOZZ	7690011893736	19207	12340893	MARKER,IDENTIFICATI DAYSIGHT STOWAGE..... UOC:A11,A24,A27,B24,H11,H24,H27,MMM	1
7	PAOZZ	7690012047849	19207	12340895	MARKER,IDENTIFICATI TRAVERSING UNIT UOC:A11,A24,A27,B24,H11,H24,H27,MMM	1
8	PAOZZ	7690012047850	19207	12340892	MARKER,IDENTIFICATI MISSILE GUIDANCE SYSTEM (MGS)..... UOC:A11,A24,A27,B24,H11,H24,H27,MMM	1
9	PAOZZ	7690011926370	19207	12340906	MARKER,IDENTIFICATI NIGHT VISION GOGGLES STOWAGE..... UOC:A11,A24,A27,B24,H11,H24,H27,MMM	2
10	PAOZZ	7690011926369	19207	12340905	MARKER,IDENTIFICATI RADIAC METER STOWAGE..... UOC:A11,A24,A27,B24,H11,H24,H27,MMM	1
11	PFOZZ	7690013589391	19207	12342625	MARKER,IDENTIFICATI TIRE PRESSURE, 42 PSI..... UOC:HVY	2
11	PAOZZ	7690014450456	19207	12446734	MARKER,IDENTIFICATI TIRE PRESSURE, 40 PSI..... UOC:AVY,BVY	1

END OF FIGURE

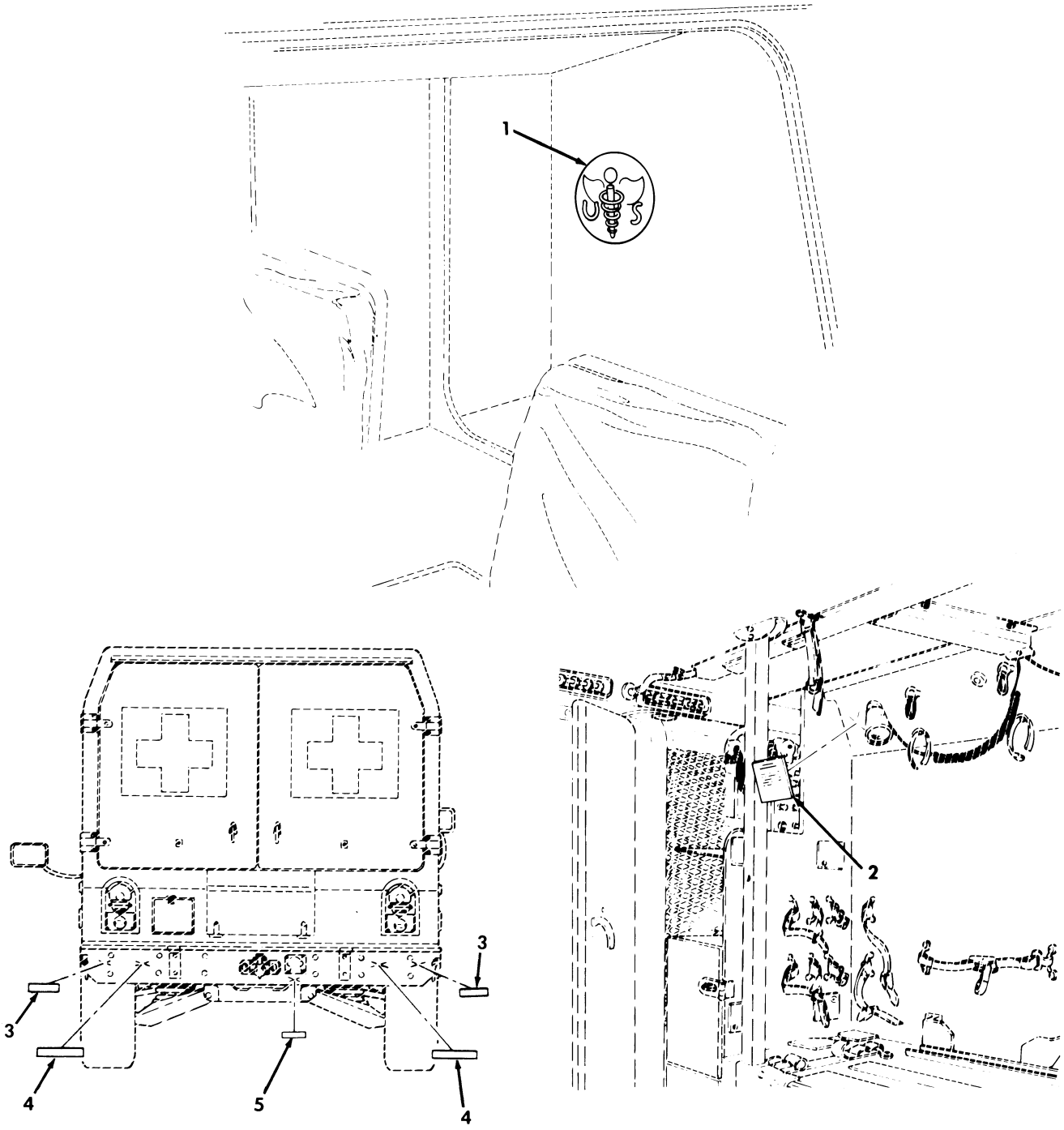

Figure 362. Data Plates and Identification Tags, M996, M996A1, M997, M997A1, and M997A2 Ambulance.

(1) ITEM NO	(2) SMR CODE	(3) NSN	(4) CAGEC	(5) PART NUMBER	(6) DESCRIPTION AND USABLE ON CODES(UOC)	(7) QTY
					GROUP 2210 DATA PLATES AND INSTRUCTION HOLDERS	
					FIG. 362 DATA PLATES AND IDENTIFICATION TAGS,M996,M996A1,M997,M997A1, AND M997A2 AMBULANCE	
1	PAOZZ	7690001385788	19207	11644801	DECAL ARMY MEDICAL SERVICE INSIGNIA UOC:A15,B15,B16,H15,H16	1
2	PAOZZ	9905012663913	19207	12341757	PLATE,INSTRUCTION HEATER AND VENT OPERATING INSTRUCTIONS..... UOC:A15,B15,B16,H15,H16	1
3	PAOZZ	7690012651133	19207	12339057	DECAL SLING..... UOC:A15,B15,B16,H15,H16	2
4	PAOZZ	7690012651134	19207	12339059	DECAL TIEDOWN..... UOC:A15,B15,B16,H15,H16	2
5	PAOZZ	7690012651135	19207	12339060	DECAL 24 VOLTS..... UOC:A15,B15,B16,H15,H16	1

END OF FIGURE

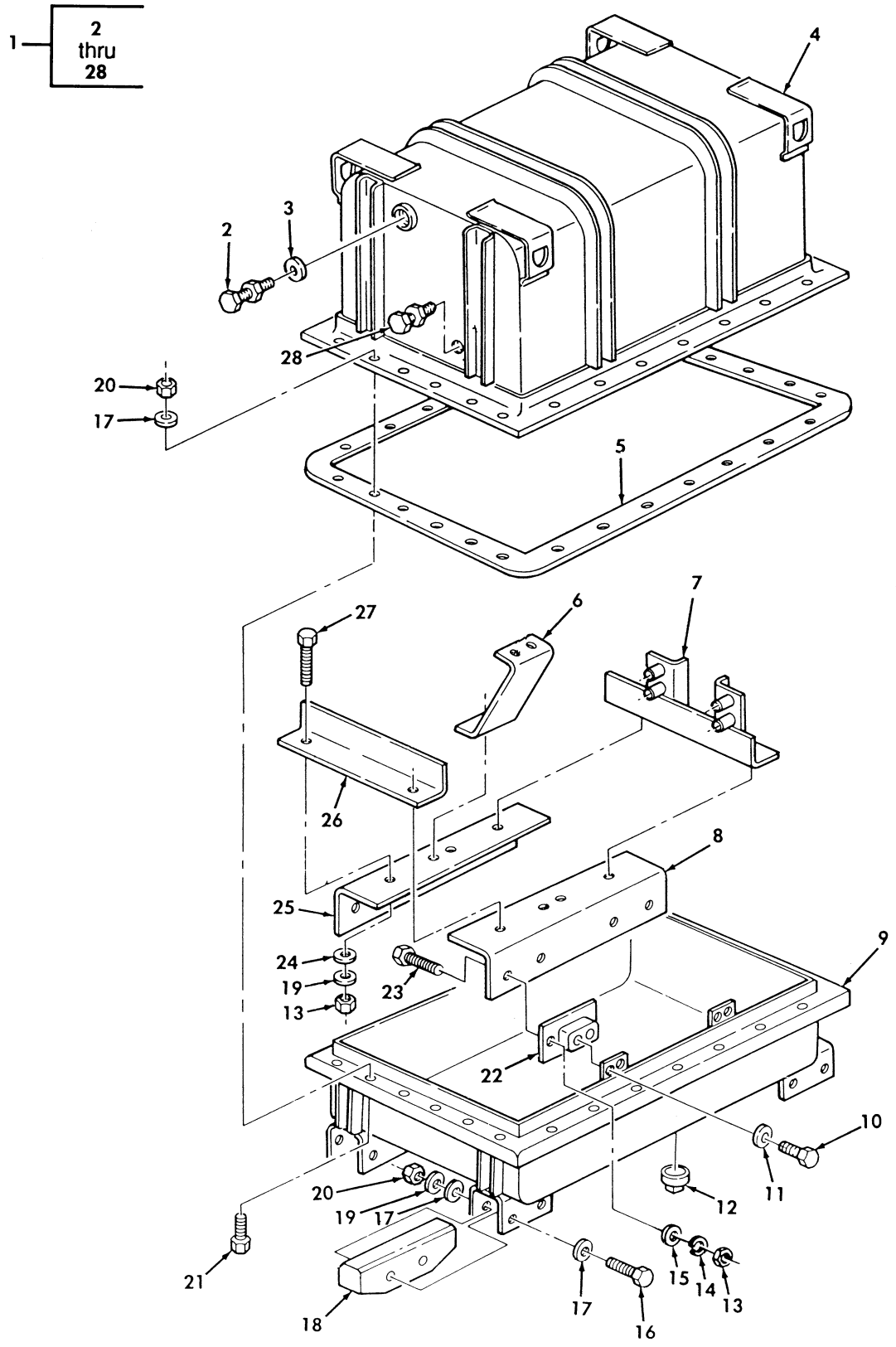

Figure 363. Engine Shipping Container Assembly.

(1) ITEM NO	(2) SMR CODE	(3) NSN	(4) CAGEC	(5) PART NUMBER	(6) DESCRIPTION AND USABLE ON CODES(UOC)	(7) QTY
					GROUP 33 SPECIAL PURPOSE KITS	
					3301 REUSABLE SHIPPING CONTAINER	
					FIG. 363 ENGINE SHIPPING CONTAINER ASSEMBLY	
1	PFFFF	8145012313747	19207	12338064	SHIPPING AND STORAG CONTAINER, ENGINE.....	1
2	PAFZZ	2520012681051	19207	12338078	.BREATHER.....	1
3	PAFZZ	4820010052994	01347	330-10-10R	.VALVE,PRESSURE EQUA.....	1
4	XAFZZ		19207	12338066	.CONTAINER,UPPER.....	1
5	PAFZZ	5330012646537	19207	12338073	.RUBBER ROUND SECTIO CONTAINER ASSEMBLY.....	1
6	PFFZZ	5340012646544	19207	12338068	.BRACKET,DOUBLE ANGL ENGINE SUPPORT	2
7	PFFZZ	5340012713059	19207	12338067	.BRACKET,MOUNTING ENGINE SUPPORT...	1
8	PFFZZ	5340012646540	19207	12338074	.BRACKET,ANGLE LEFT.....	1
9	XAFZZ		19207	12338065	.CONTAINER,LOWER.....	1
10	PAFZZ	5305002693233	80204	B1821BH038F063N	.SCREW,CAP,HEXAGON H 3/8-24 X 5/8..	8
11	PAFZZ	5310006379541	96906	MS35338-46	.WASHER,LOCK 3/8.....	8
12	PAFZZ	4730002212140	96906	MS20913-6S	.PLUG,PIPE 3/4-14.....	1
13	PAFZZ	5310008807744	96906	MS51967-5	.NUT,PLAIN,HEXAGON 5/16-18.....	8
14	PAFZZ	5310004079566	96906	MS35338-45	.WASHER,LOCK 5/16.....	8
15	PAFZZ	5310000814219	96906	MS27183-12	.WASHER,FLAT 11/32.....	8
16	PAFZZ	5305000712083	80204	B1821BH050C500N	.SCREW,CAP,HEXAGON H 1/2-13 X 5.00.	8
17	PAFZZ	5310008095998	96906	MS27183-18	.WASHER,FLAT 17/32.....	42
18	PAFZZ	5340012653676	19207	12338071	.RUNNER,METAL.....	4
19	PAFZZ	5310005845272	96906	MS35338-48	.WASHER,LOCK 1/2.....	16
20	PAFZZ	5310007680318	21439	01857-007	.NUT,PLAIN,HEXAGON 1/2-13.....	42
21	PAFZZ	5305007320511	80204	B1821BH050C113N	.SCREW,CAP,HEXAGON H 1/2-13 X 1-1/8	26
22	PFFZZ	5342012646543	19207	12338070	.MOUNT,RESILIENT.....	4
23	PAFZZ	5306002264828	80204	B1821BH031C113N	.BOLT,MACHINE 5/16-18 X 1-1/8.....	8
24	PAFZZ	5310008093079	96906	MS27183-19	.WASHER,FLAT 9/16.....	8
25	PFFZZ	5340012646541	19207	12338075	.BRACKET,ANGLE.....	1
26	PFFZZ	5340012653674	19207	12338076	.BRACKET,ANGLE.....	1
27	PAFZZ	5305000712069	80204	B1821BH050C150N	.SCREW,CAP,HEXAGON H 1/2-13 X 1-1/2	8
28	PAFZZ	6685006181822	00334	SK2155	.INDICATOR,HUMIDITY.....	1

END OF FIGURE

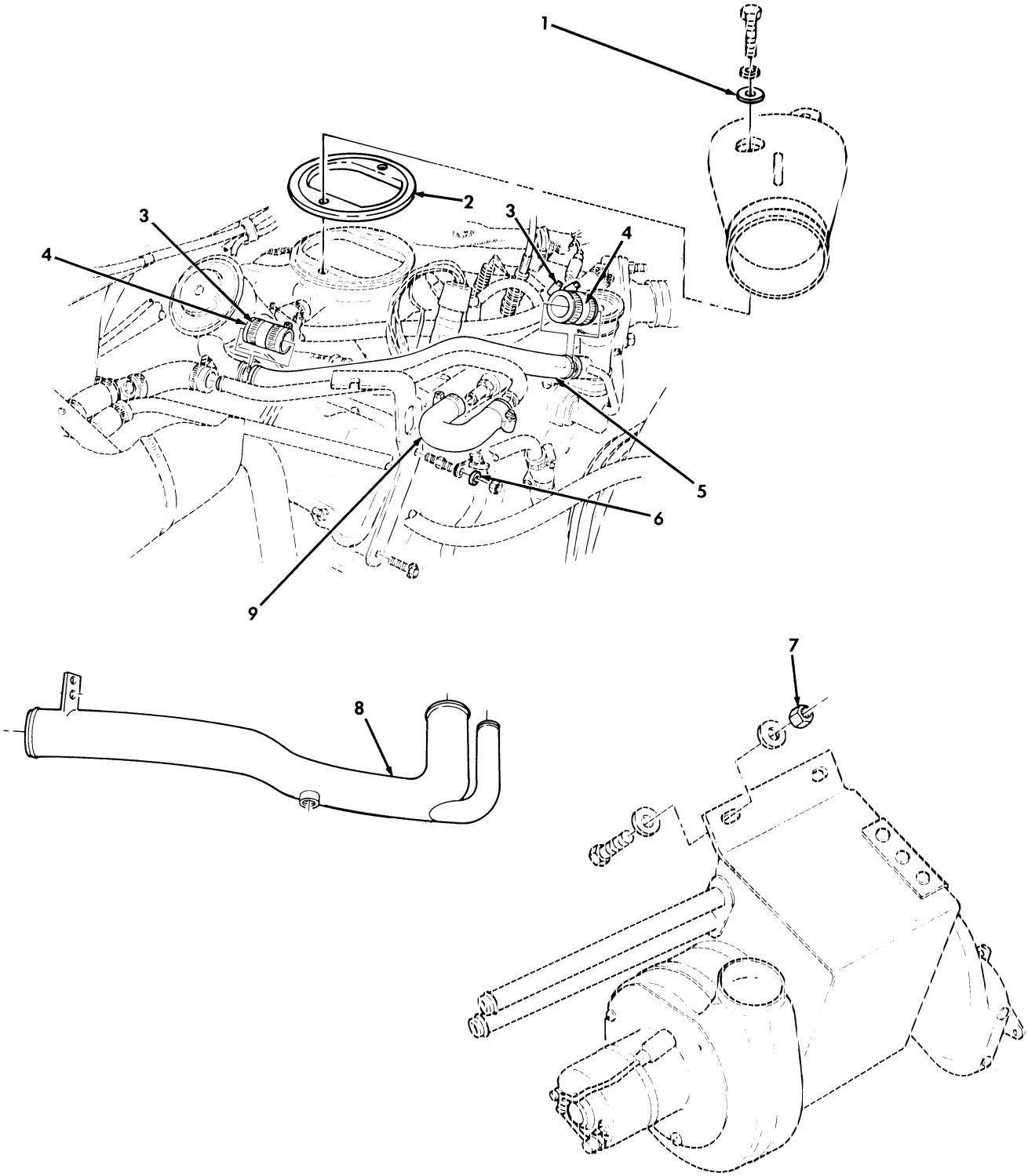

Figure 364. Arctic Kit, Fuel Injection Pump, Engine Gaskets, and CDR Tube.

(1) ITEM NO	(2) SMR CODE	(3) NSN	(4) CAGEC	(5) PART NUMBER	(6) DESCRIPTION AND USABLE ON CODES(UOC)	(7) QTY
					GROUP 3303 WINTERIZATION KITS	
					FIG. 364 ARCTIC KIT,FUEL INJECTION PUMP,ENGINE GASKETS,AND CDR TUBE	
1	PAOZZ	5310011857214	19207	12339052	WASHER,FLAT PART OF KIT P/N 5705698. UOC:AVY,A11,A13,A14,A15,A20,A24,A25, A26,A27,B16,B17,B18,HVY,H11,H13,H14, H15,H16,H17,H18,H20,H21,H24,H25,H26, H27,H28,MMM	2
2	PAOZZ	5330012461822	19207	12338382	GASKET PART OF KIT P/N 5705698..... UOC:AVY,A11,A13,A14,A15,A20,A24,A25, A26,A27,B16,B17,B18,HVY,H11,H13,H14, H15,H16,H17,H18,H20,H21,H24,H25,H26, H27,H28,MMM	1
3	PAOZZ	4730009083193	66295	WWD48-58H	CLAMP,HOSE PART OF KIT P/N 5705698.. UOC:AVY,A11,A13,A14,A15,A20,A24,A25, A26,A27,B16,B17,B18,HVY,H11,H13,H14, H15,H16,H17,H18,H20,H21,H24,H25,H26, H27,H28,MMM	2
4	PAOZZ	4720012111998	19207	12340492	HOSE,NONMETALLIC PART OF KIT P/N 5705698..... UOC:AVY,A11,A13,A14,A15,A20,A24,A25, A26,A27,B16,B17,B18,HVY,H11,H13,H14, H15,H16,H17,H18,H20,H21,H24,H25,H26, H27,H28,MMM	2
5	PFOZZ	4710012572649	19207	12340498	TUBE ASSEMBLY,METAL PART OF KIT P/N 5705698..... UOC:AVY,A11,A13,A14,A15,A20,A24,A25, A26,A27,B16,B17,B18,HVY,H11,H13,H14, H15,H16,H17,H18,H20,H21,H24,H25,H26, H27,H28,MMM	1
6	PAOZZ	5310012067306	7X677	11500207	WASHER,LOCK PART OF KIT P/N 5705698. UOC:AVY,A11,A13,A14,A15,A20,A24,A25, A26,A27,B16,B17,B18,HVY,H11,H13,H14, H15,H16,H17,H18,H20,H21,H24,H25,H26, H27,H28,MMM	1
7	PAOZZ	5310008140673	96906	MS51943-33	NUT,SELF-LOCKING,HE 5/16-18 PART OF KIT P/N 5705698..... UOC:AVY,A11,A13,A14,A15,A20,A24,A25, A26,A27,B16,B17,B18,HVY,H11,H13,H14, H15,H16,H17,H18,H20,H21,H24,H25,H26, H27,H28,MMM	1
8	PAOZZ	4710011880028	34623	5578604	TUBE,BENT,METALLIC PART OF KIT P/N 5705698..... UOC:AVY,A11,A13,A14,A15,A20,A24,A25, A26,A27,B16,B17,B18,HVY,H11,H13,H14, H15,H16,H17,H18,H20,H21,H24,H25,H26, H27,H28,MMM	1
9	PFOZZ	4720012572655	19207	12340493	HOSE,PREFORMED PART OF KIT P/N 5705698..... UOC:AVY,A11,A13,A14,A15,A20,A24,A25, A26,A27,B16,B17,B18,HVY,H11,H13,H14,	1

(1) ITEM NO	(2) SMR CODE	(3) NSN	(4) CAGEC	(5) PART NUMBER	(6) DESCRIPTION AND USABLE ON CODES(UOC)	(7) QTY
					H15,H16,H17,H18,H20,H21,H24,H25,H26, H27,H28,MMM	

END OF FIGURE

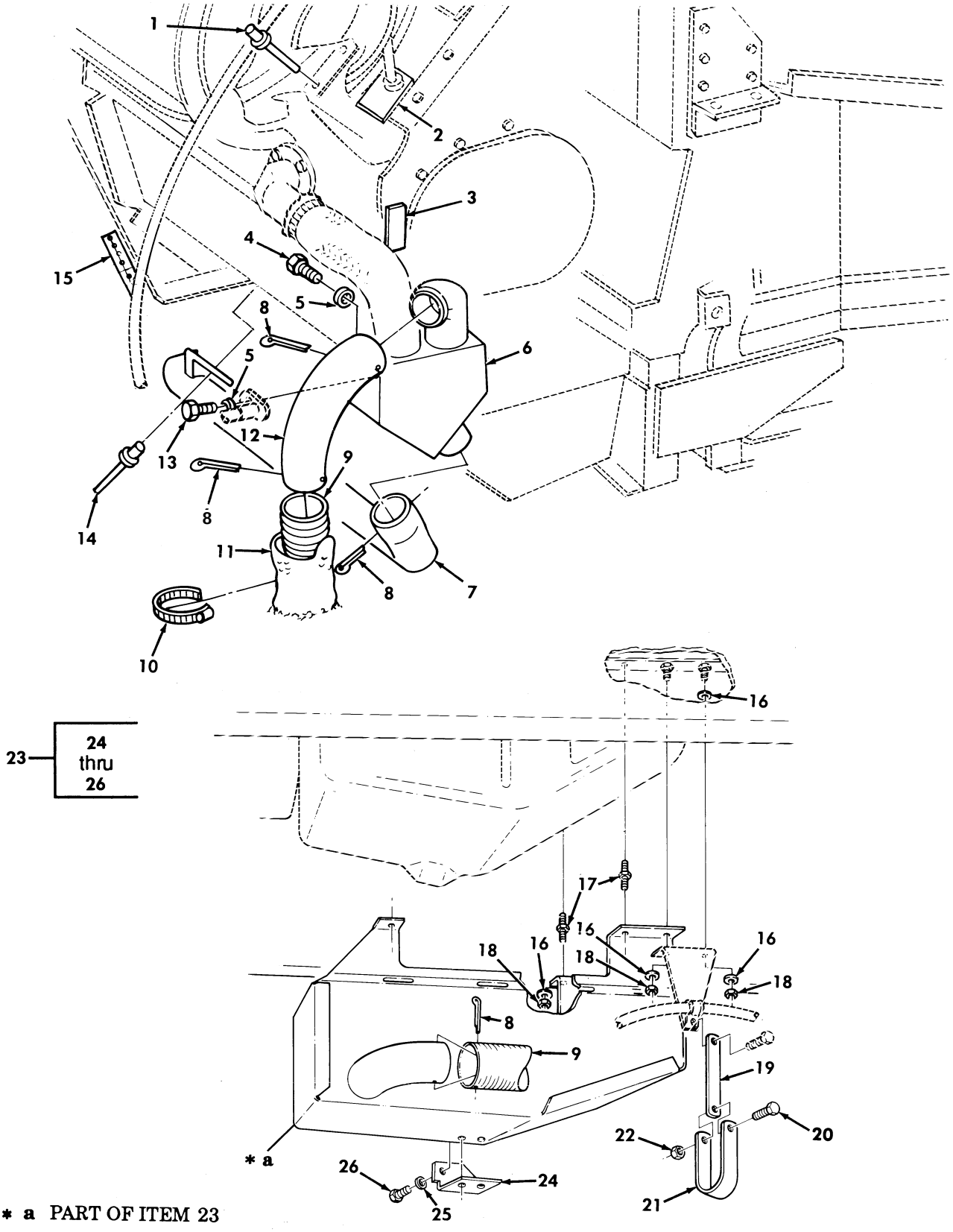

* a PART OF ITEM 23

Figure 365. Arctic Kit, Pan Cover and Heater Tube.

(1) ITEM NO	(2) SMR CODE	(3) NSN	(4) CAGEC	(5) PART NUMBER	(6) DESCRIPTION AND USABLE ON CODES(UOC)	(7) QTY
					GROUP 3303 WINTERIZATION KITS	
					FIG. 365 ARCTIC KIT,PAN COVER AND HEATER TUBE	
1	PAOZZ	5320011357319	11815	CR-213-6-3	RIVET,BLIND PART OF KIT P/N 5705698. UOC:AVY,A11,A13,A14,A15,A20,A24,A25, A26,A27,B16,B17,B18,HVY,H11,H13,H14, H15,H16,H17,H18,H20,H21,H24,H25,H26, H27,H28,MMM	2
2	KFFZZ		19207	12340722	TEMPLATE PART OF KIT P/N 5705698.... UOC:AVY,A11,A13,A14,A15,A20,A24,A25, A26,A27,B16,B17,B18,HVY,H11,H13,H14, H15,H16,H17,H18,H20,H21,H24,H25,H26, H27,H28,MMM	1
3	KFFZZ		19207	12342103	TEMPLATE PART OF KIT P/N 5705698.... UOC:AVY,A11,A13,A14,A15,A20,A24,A25, A26,A27,B16,B17,B18,HVY,H11,H13,H14, H15,H16,H17,H18,H20,H21,H24,H25,H26, H27,H28,MMM	2
4	PAOZZ	5305000680508	80204	B1821BH025C075N	SCREW,CAP,HEXAGON H 1/4-20 X 3/4 PART OF KIT P/N 5705698..... UOC:AVY,A11,A13,A14,A15,A20,A24,A25, A26,A27,B16,B17,B18,HVY,H11,H13,H14, H15,H16,H17,H18,H20,H21,H24,H25,H26, H27,H28,MMM	2
5	PAOZZ	5310005825965	96906	MS35338-44	WASHER,LOCK 1/4 PART OF KIT P/N 5705698..... UOC:AVY,A11,A13,A14,A15,A20,A24,A25, A26,A27,B16,B17,B18,HVY,H11,H13,H14, H15,H16,H17,H18,H20,H21,H24,H25,H26, H27,H28,MMM	2
6	PAOZZ	2540011975449	19207	12342082	DIVERTER ASSEMBLY,E PART OF KIT P/N 5705698..... UOC:AVY,A11,A13,A14,A15,A20,A24,A25, A26,A27,B16,B17,B18,HVY,H11,H13,H14, H15,H16,H17,H18,H20,H21,H24,H25,H26, H27,H28,MMM	1
7	PFOZZ	2990013232562	19207	12342094	PIPE,EXHAUST PART OF KIT P/N 5705698 UOC:AVY,A11,A13,A14,A15,A20,A24,A25, A26,A27,B16,B17,B18,HVY,H11,H13,H14, H15,H16,H17,H18,H20,H21,H24,H25,H26, H27,H28,MMM	1
8	PAOZZ	5315002857161	80205	MS24665-377	PIN,COTTER PART OF KIT P/N 5705698.. UOC:AVY,A11,A13,A14,A15,A20,A24,A25, A26,A27,B16,B17,B18,HVY,H11,H13,H14, H15,H16,H17,H18,H20,H21,H24,H25,H26, H27,H28,MMM	4
9	PAOZZ	2990013949670	34623	12340587-3	PIPE,EXHAUST PART OF KIT P/N 5705698 UOC:AVY,A11,A13,A14,A15,A20,A24,A25, A26,A27,B16,B17,B18,HVY,H11,H13,H14, H15,H16,H17,H18,H20,H21,H24,H25,H26, H27,H28,MMM	1

(1) ITEM NO	(2) SMR CODE	(3) NSN	(4) CAGEC	(5) PART NUMBER	(6) DESCRIPTION AND USABLE ON CODES(UOC)	(7) QTY
10	PAOZZ	4730009083193	66295	WWD48-58H	CLAMP,HOSE PART OF KIT P/N 5705698.. UOC:AVY,A11,A13,A14,A15,A20,A24,A25, A26,A27,B16,B17,B18,HVY,H11,H13,H14, H15,H16,H17,H18,H20,H21,H24,H25,H26, H27,H28,MMM	2
11	PAOZZ	2990013229880	19207	12342087-2	CONNECTOR,EXHAUST P PART OF KIT P/N 5705698..... UOC:AVY,A11,A13,A14,A15,A20,A24,A25, A26,A27,B16,B17,B18,HVY,H11,H13,H14, H15,H16,H17,H18,H20,H21,H24,H25,H26, H27,H28,MMM	1
12	PAOZZ	2990013943751	19207	12342089	PIPE,EXHAUST PART OF KIT P/N 5705698 UOC:AVY,A11,A13,A14,A15,A20,A24,A25, A26,A27,B16,B17,B18,HVY,H11,H13,H14, H15,H16,H17,H18,H20,H21,H24,H25,H26, H27,H28,MMM	1
13	PAOZZ	5305000712506	80204	B1821BH025C050N	SCREW,CAP,HEXAGON H 1/4-20 X 1/2 PART OF KIT P/N 5705698..... UOC:AVY,A11,A13,A14,A15,A20,A24,A25, A26,A27,B16,B17,B18,HVY,H11,H13,H14, H15,H16,H17,H18,H20,H21,H24,H25,H26, H27,H28,MMM	1
14	PAOZZ	5320012716357	19207	12339355-1	RIVET,BLIND PART OF KIT P/N 5705698. UOC:AVY,A11,A13,A14,A15,A20,A24,A25, A26,A27,B16,B17,B18,HVY,H11,H13,H14, H15,H16,H17,H18,H20,H21,H24,H25,H26, H27,H28,MMM	4
15	KFFZZ		19207	12340695	TEMPLATE PART OF KIT P/N 5705698.... UOC:AVY,A11,A13,A14,A15,A20,A24,A25, A26,A27,B16,B17,B18,HVY,H11,H13,H14, H15,H16,H17,H18,H20,H21,H24,H25,H26, H27,H28,MMM	1
16	PAOZZ	5310008094058	96906	MS27183-10	WASHER,FLAT 1/4 PART OF KIT P/N 5705698..... UOC:AVY,A11,A13,A14,A15,A20,A24,A25, A26,A27,B16,B17,B18,HVY,H11,H13,H14, H15,H16,H17,H18,H20,H21,H24,H25,H26, H27,H28,MMM	10
17	PAOZZ	5307011505992	7X677	14066307	STUD,SHOULDERED PART OF KIT P/N 5705698..... UOC:AVY,A11,A13,A14,A15,A20,A24,A25, A26,A27,B16,B17,B18,HVY,H11,H13,H14, H15,H16,H17,H18,H20,H21,H24,H25,H26, H27,H28,MMM	7
* 18	PAOZZ	5310012065479	7X677	11516075	NUT,SELF-LOCKING,HE M6-1.0MM PART OF KIT P/N 5705698..... UOC:AVY,A11,A13,A14,A15,A20,A24,A25, A26,A27,B16,B17,B18,HVY,H11,H13,H14, H15,H16,H17,H18,H20,H21,H24,H25,H26, H27,H28,MMM	10
19	PAOZZ	5342013262583	19207	12342085	ANCHOR STRAP PART OF KIT P/N 5705698 UOC:AVY,A11,A13,A14,A15,A20,A24,A25, A26,A27,B16,B17,B18,HVY,H11,H13,H14,	1

(1) ITEM NO	(2) SMR CODE	(3) NSN	(4) CAGEC	(5) PART NUMBER	(6) DESCRIPTION AND USABLE ON CODES(UOC)	(7) QTY
					H15,H16,H17,H18,H20,H21,H24,H25,H26, H27,H28,MMM	
20	PAOZZ	5305001804966	96906	MS51849-64	SCREW,MACHINE #10-32 X 1/2 PART OF KIT P/N 5705698..... UOC:AVY,A11,A13,A14,A15,A20,A24,A25, A26,A27,B16,B17,B18,HVY,H11,H13,H14, H15,H16,H17,H18,H20,H21,H24,H25,H26, H27,H28,MMM	1
21	PAOZZ	5340009883186	96906	MS21333-19	CLAMP,LOOP PART OF KIT P/N 5705698.. UOC:AVY,A11,A13,A14,A15,A20,A24,A25, A26,A27,B16,B17,B18,HVY,H11,H13,H14, H15,H16,H17,H18,H20,H21,H24,H25,H26, H27,H28,MMM	1
22	PAOZZ	5310000617326	96906	MS21045-3	NUT,SELF-LOCKING,HE 3/8-32 PART OF KIT P/N 5705698..... UOC:AVY,A11,A13,A14,A15,A20,A24,A25, A26,A27,B16,B17,B18,HVY,H11,H13,H14, H15,H16,H17,H18,H20,H21,H24,H25,H26, H27,H28,MMM	1
23	PFOOO	2540011975460	19207	12342088	SHRUOD,ARCTIC PART OF KIT P/N 5705698..... UOC:AVY,A11,A13,A14,A15,A20,A24,A25, A26,A27,B16,B17,B18,HVY,H11,H13,H14, H15,H16,H17,H18,H20,H21,H24,H25,H26, H27,H28,MMM	1
24	PAOZZ	5340013951244	19207	12340474	.BRACKET,ANGLE..... UOC:AVY,A11,A13,A14,A15,A20,A24,A25, A26,A27,B16,B17,B18,HVY,H11,H13,H14, H15,H16,H17,H18,H20,H21,H24,H25,H26, H27,H28,MMM	1
25	PAOZZ	5310008094058	96906	MS27183-10	.WASHER,FLAT 1/4..... UOC:AVY,A11,A13,A14,A15,A20,A24,A25, A26,A27,B16,B17,B18,HVY,H11,H13,H14, H15,H16,H17,H18,H20,H21,H24,H25,H26, H27,H28,MMM	4
26	PAOZZ	5305000712506	80204	B1821BH025C050N	.SCREW,CAP,HEXAGON H 1/4/-20 X 1/2. UOC:AVY,A11,A13,A14,A15,A20,A24,A25, A26,A27,B16,B17,B18,HVY,H11,H13,H14, H15,H16,H17,H18,H20,H21,H24,H25,H26, H27,H28,MMM	4

END OF FIGURE

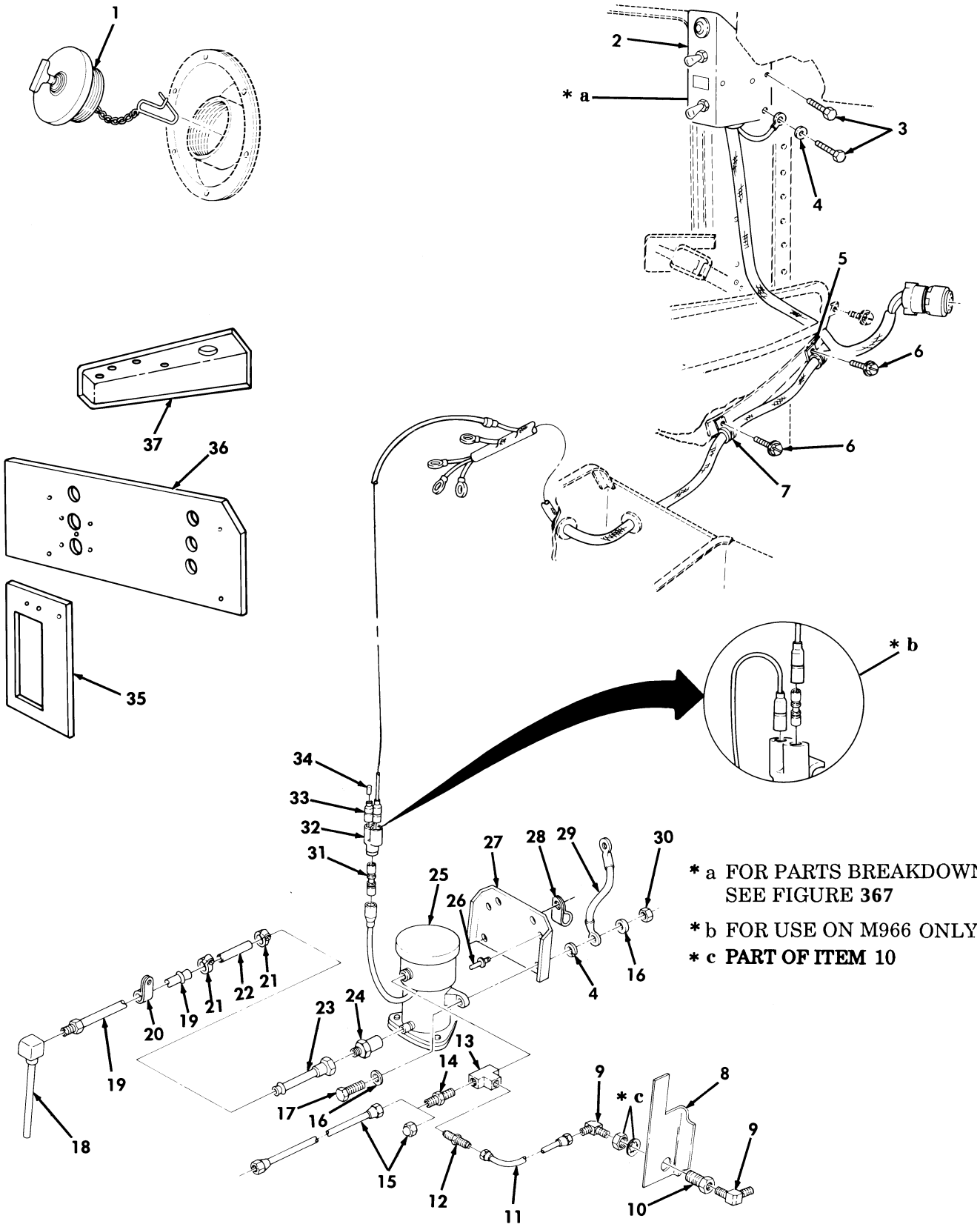

Figure 366. Arctic Kit, Control Box, Gas Cap, Fuel Pump, and Fuel Lines.

(1) ITEM NO	(2) SMR CODE	(3) NSN	(4) CAGEC	(5) PART NUMBER	(6) DESCRIPTION AND USABLE ON CODES(UOC)	(7) QTY
					GROUP 3303 WINTERIZATION KITS	
					FIG. 366 ARCTIC KIT,CONTROL BOX,GAS CAP,FUEL PUMP,AND FUEL LINES	
1	PAOZZ	5342012541498	19207	12338558-2	CAP,FILLER OPENING PART OF KIT P/N 5705698..... UOC:AVY,A11,A13,A14,A15,A20,A24,A25, A26,A27,B16,B17,B18,HVY,H11,H13,H14, H15,H16,H17,H18,H20,H21,H24,H25,H26, H27,H28,MMM	1
2	PFOOO	2540011992396	19207	12340436	CONTROL BOX PART OF KIT P/N 5705698. UOC:AVY,A11,A13,A14,A15,A20,A24,A25, A26,A27,B16,B17,B18,HVY,H11,H13,H14, H15,H16,H17,H18,H20,H21,H24,H25,H26, H27,H28,MMM	1
3	PAOZZ	5305010846067	96906	MS51871-1	SCREW,TAPPING 1/4-20 X 1/2 PART OF KIT P/N 5705698..... UOC:AVY,A11,A13,A14,A15,A20,A24,A25, A26,A27,B16,B17,B18,HVY,H11,H13,H14, H15,H16,H17,H18,H20,H21,H24,H25,H26, H27,H28,MMM	2
4	PAOZZ	5310005501130	96906	MS35333-40	WASHER,LOCK 1/4 PART OF KIT P/N 5705698..... UOC:AVY,A11,A13,A14,A15,A20,A24,A25, A26,A27,B16,B17,B18,HVY,H11,H13,H14, H15,H16,H17,H18,H20,H21,H24,H25,H26, H27,H28,MMM	2
5	PAOZZ	5340000913790	96906	MS21333-72	CLAMP,LOOP PART OF KIT P/N 5705698.. UOC:AVY,A11,A13,A14,A15,A20,A24,A25, A26,A27,B16,B17,B18,HVY,H11,H13,H14, H15,H16,H17,H18,H20,H21,H24,H25,H26, H27,H28,MMM	1
6	PAOZZ	5305014339248	24617	9414295	SCREW,MACHINE #10-32 X 1/2 PART OF KIT P/N 5705698..... UOC:AVY,A11,A13,A14,A15,A20,A24,A25, A26,A27,B16,B17,B18,HVY,H11,H13,H14, H15,H16,H17,H18,H20,H21,H24,H25,H26, H27,H28,MMM	2
7	PAOZZ	5340000572904	96906	MS21333-71	CLAMP,LOOP PART OF KIT P/N 5705698.. UOC:AVY,A11,A13,A14,A15,A20,A24,A25, A26,A27,B16,B17,B18,HVY,H11,H13,H14, H15,H16,H17,H18,H20,H21,H24,H25,H26, H27,H28,MMM	1
8	KFFZZ		19207	12340702	TEMPLATE PART OF KIT P/N 5705698.... UOC:AVY,A11,A13,A14,A15,A20,A24,A25, A26,A27,B16,B17,B18,HVY,H11,H13,H14, H15,H16,H17,H18,H20,H21,H24,H25,H26, H27,H28,MMM	1
9	PAOZZ	4730014565446	24617	15670396	ELBOW,PIPE TO TUBE PART OF KIT P/N 5705698..... UOC:AVY,A11,A13,A14,A15,A20,A24,A25, A26,A27,B16,B17,B18,HVY,H11,H13,H14,	2

(1) ITEM NO	(2) SMR CODE	(3) NSN	(4) CAGEC	(5) PART NUMBER	(6) DESCRIPTION AND USABLE ON CODES(UOC)	(7) QTY
					H15,H16,H17,H18,H20,H21,H24,H25,H26, H27,H28,MMM	
10	PAOZZ	4730008975497	79470	W21204	COUPLING,PIPE PART OF KIT P/N 5705698..... UOC:AVY,A11,A13,A14,A15,A20,A24,A25, A26,A27,B16,B17,B18,HVY,H11,H13,H14, H15,H16,H17,H18,H20,H21,H24,H25,H26, H27,H28,MMM	1
11	PAOZZ	4710013953982	19207	12342605	TUBE ASSEMBLY,METAL ARCTIC FUEL LINE, PART OF KIT P/N 5705698..... UOC:AVY,A11,A13,A14,A15,A20,A24,A25, A26,A27,B16,B17,B18,HVY,H11,H13,H14, H15,H16,H17,H18,H20,H21,H24,H25,H26, H27,H28,MMM	1
12	PAOZZ	4730002660536	24617	110200	ADAPTER,STRAIGHT,PI ARCTIC FUEL PUMP PART OF KIT P/N 5705698..... UOC:AVY,A11,A13,A14,A15,A20,A24,A25, A26,A27,B16,B17,B18,HVY,H11,H13,H14, H15,H16,H17,H18,H20,H21,H24,H25,H26, H27,H28,MMM	1
13	PAOZZ	4730004713102	81343	4-4-4 130438B	TEE,PIPE PART OF KIT P/N 5705698.... UOC:AVY,A11,A13,A14,A15,A20,A24,A25, A26,A27,B16,B17,B18,HVY,H11,H13,H14, H15,H16,H17,H18,H20,H21,H24,H25,H26, H27,H28,MMM	1
14	PAOZZ	4730002660538	06178	1295	ADAPTER,STRAIGHT,PI PART OF KIT P/N 5705698..... UOC:A15,B16,H15,H16	1
14	PAOZZ	4730002660536	24617	110200	ADAPTER,STRAIGHT,PI PART OF KIT P/N 5705698..... UOC:AVY,A11,A13,A14,A20,A24,A25,A26, A27,B17,B18,HVY,H11,H13,H14,H17,H18, H20,H21,H24,H25,H26,H27,H28,MMM	1
15	PAOZZ	4710013946169	19207	12342606	TUBE ASSEMBLY,METAL PART OF KIT P/N 5705698..... UOC:A15,B16,H15,H16	1
15	PAOZZ	4730002608285	81343	5 010112B(N5)	CAP,TUBE PART OF KIT P/N 5705698.... UOC:AVY,A11,A13,A14,A20,A24,A25,A26, A27,B17,B18,HVY,H11,H13,H14,H17,H18, H20,H21,H24,H25,H26,H27,H28,MMM	1
16	PAFZZ	5310008094058	96906	MS27183-10	WASHER,FLAT 1/4..... UOC:AVY,A11,A13,A14,A15,A20,A24,A25, A26,A27,B16,B17,B18,HVY,H11,H13,H14, H15,H16,H17,H18,H20,H21,H24,H25,H26, H27,H28,MMM	4
17	PAOZZ	5305002253842	80204	B1821BH025C100N	SCREW,CAP,HEXAGON H 1/4-20 X 1.00 PART OF KIT P/N 5705698..... UOC:AVY,A11,A13,A14,A15,A20,A24,A25, A26,A27,B16,B17,B18,HVY,H11,H13,H14, H15,H16,H17,H18,H20,H21,H24,H25,H26, H27,H28,MMM	2
18	PAOZZ	4710013592956	19207	12338548-2	TUBE ASSEMBLY,METAL PART OF KIT P/N 5705698.....	1

(1) ITEM NO	(2) SMR CODE	(3) NSN	(4) CAGEC	(5) PART NUMBER	(6) DESCRIPTION AND USABLE ON CODES(UOC)	(7) QTY
					UOC:AVY,A11,A13,A14,A15,A20,A24,A25, A26,A27,B16,B17,B18,HVY,H11,H13,H14, H15,H16,H17,H18,H20,H21,H24,H25,H26, H27,H28,MMM	
19	PAOZZ	4710012030607	34623	5588694	TUBE ASSEMBLY,METAL PART OF KIT P/N 5705698..... UOC:AVY,A11,A13,A14,A15,A20,A24,A25, A26,A27,B16,B17,B18,HVY,H11,H13,H14, H15,H16,H17,H18,H20,H21,H24,H25,H26, H27,H28,MMM	1
20	PAOZZ	5340009936207	96906	MS21333-99	CLAMP,LOOP PART OF KIT P/N 5705698.. UOC:AVY,A11,A13,A14,A15,A20,A24,A25, A26,A27,B16,B17,B18,HVY,H11,H13,H14, H15,H16,H17,H18,H20,H21,H24,H25,H26, H27,H28,MMM	1
21	PAOZZ	4730000243971	7Z588	6706	CLAMP,HOSE PART OF KIT P/N 5705698.. UOC:AVY,A11,A13,A14,A15,A20,A24,A25, A26,A27,B16,B17,B18,HVY,H11,H13,H14, H15,H16,H17,H18,H20,H21,H24,H25,H26, H27,H28,MMM	2
* 22	MOOZZ		19207	12338553-1	HOSE,NONMETALLIC MAKE FROM HOSE,P/N 9438315,2.80 INCHES LONG PART OF KIT P/N 5705698..... UOC:AVY,A11,A13,A14,A15,A20,A24,A25, A26,A27,B16,B17,B18,HVY,H11,H13,H14, H15,H16,H17,H18,H20,H21,H24,H25,H26, H27,H28,MMM	1
23	PAOZZ	4710012030608	19207	12338564	TUBE ASSEMBLY,METAL PART OF KIT P/N 5705698..... UOC:AVY,A11,A13,A14,A15,A20,A24,A25, A26,A27,B16,B17,B18,HVY,H11,H13,H14, H15,H16,H17,H18,H20,H21,H24,H25,H26, H27,H28,MMM	1
24	PAOZZ	4730002776347	20969	246X5X4	ADAPTER,STRAIGHT,PI PART OF KIT P/N 5705698..... UOC:AVY,A11,A13,A14,A15,A20,A24,A25, A26,A27,B16,B17,B18,HVY,H11,H13,H14, H15,H16,H17,H18,H20,H21,H24,H25,H26, H27,H28,MMM	1
25	PAOZZ	2910009309367	53711	2590174	PUMP,FUEL,ELECTRICA PART OF KIT P/N 5705698..... UOC:AVY,A11,A13,A14,A15,A20,A24,A25, A26,A27,B16,B17,B18,HVY,H11,H13,H14, H15,H16,H17,H18,H20,H21,H24,H25,H26, H27,H28,MMM	1
26	PAFZZ	5320011357319	80205	NAS9301BNS-6-03	RIVET,BLIND PART OF KIT P/N 5705698. UOC:AVY,A11,A13,A14,A15,A20,A24,A25, A26,A27,B16,B17,B18,HVY,H11,H13,H14, H15,H16,H17,H18,H20,H21,H24,H25,H26, H27,H28,MMM	4
27	PFFZZ	5340012043903	19207	12338559	BRACKET,DOUBLE ANGL PART OF KIT P/N 5705698..... UOC:AVY,A11,A13,A14,A15,A20,A24,A25,	1

(1) ITEM NO	(2) SMR CODE	(3) NSN	(4) CAGEC	(5) PART NUMBER	(6) DESCRIPTION AND USABLE ON CODES(UOC)	(7) QTY
					A26,A27,B16,B17,B18,HVY,H11,H13,H14, H15,H16,H17,H18,H20,H21,H24,H25,H26, H27,H28,MMM	
28	PAOZZ	5340002827537	96906	MS21333-41	CLAMP,LOOP PART OF KIT P/N 5705698.. UOC:AVY,A11,A13,A14,A15,A20,A24,A25, A26,A27,B16,B17,B18,HVY,H11,H13,H14, H15,H16,H17,H18,H20,H21,H24,H25,H26, H27,H28,MMM	1
29	PFOZZ	6150012608000	19207	12340489	LEAD,ELECTRICAL PART OF KIT P/N 5705698..... UOC:AVY,A11,A13,A14,A15,A20,A24,A25, A26,A27,B16,B17,B18,HVY,H11,H13,H14, H15,H16,H17,H18,H20,H21,H24,H25,H26, H27,H28,MMM	1
30	PAOZZ	5310000614650	96906	MS51943-31	NUT,SELF-LOCKING,HE 1/4-20..... UOC:AVY,A11,A13,A14,A15,A20,A24,A25, A26,A27,B16,B17,B18,HVY,H11,H13,H14, H15,H16,H17,H18,H20,H21,H24,H25,H26, H27,H28,MMM	2
31	PAOZZ	5935008074109	19207	8741492	ADAPTER,CONNECTOR PART OF KIT P/N 5705698..... UOC:AVY,A11,A13,A14,A15,A20,A24,A25, A26,A27,B16,B17,B18,HVY,H11,H13,H14, H15,H16,H17,H18,H20,H21,H24,H25,H26, H27,H28,MMM	1
32	PAOZZ	5935009006281	96906	MS27147-1	ADAPTER,CONNECTOR PART OF KIT P/N 5705698..... UOC:AVY,A11,A13,A14,A15,A20,A24,A25, A26,A27,B16,B17,B18,HVY,H11,H13,H14, H15,H16,H17,H18,H20,H21,H24,H25,H26, H27,H28,MMM	1
33	PAOZZ	5935008338561	19207	8338561	SHELL,ELECTRICAL CO PART OF KIT P/N 5705698..... UOC:AVY,A11,A13,A14,A15,A20,A24,A25, A26,A27,B16,B17,B18,HVY,H11,H13,H14, H15,H16,H17,H18,H20,H21,H24,H25,H26, H27,H28,MMM	1
34	PAOZZ	5935002140904	19207	7982907	DUMMY CONNECTOR,PLU PART OF KIT P/N 5705698..... UOC:AVY,A11,A13,A14,A15,A20,A24,A25, A26,A27,B16,B17,B18,HVY,H11,H13,H14, H15,H16,H17,H18,H20,H21,H24,H25,H26, H27,H28,MMM	1
35	KFFZZ		19207	12340703	TEMPLATE PART OF KIT P/N 5705698.... UOC:AVY,A11,A13,A14,A15,A20,A24,A25, A26,A27,B16,B17,B18,HVY,H11,H13,H14, H15,H16,H17,H18,H20,H21,H24,H25,H26, H27,H28,MMM	1
36	KFFZZ		19207	12340704	TEMPLATE PART OF KIT P/N 5705698.... UOC:AVY,A11,A13,A14,A15,A20,A24,A25, A26,A27,B16,B17,B18,HVY,H11,H13,H14, H15,H16,H17,H18,H20,H21,H24,H25,H26, H27,H28,MMM	1

(1) ITEM NO	(2) SMR CODE	(3) NSN	(4) CAGEC	(5) PART NUMBER	(6) DESCRIPTION AND USABLE ON CODES(UOC)	(7) QTY
37	KFFZZ		34623	12340696	TEMPLATE,FUEL PUMP PART OF KIT P/N 5705698..... UOC:AVY,A11,A13,A14,A15,A20,A24,A25, A26,A27,B16,B17,B18,HVY,H11,H13,H14, H15,H16,H17,H18,H20,H21,H24,H25,H26, H27,H28,MMM	1

END OF FIGURE

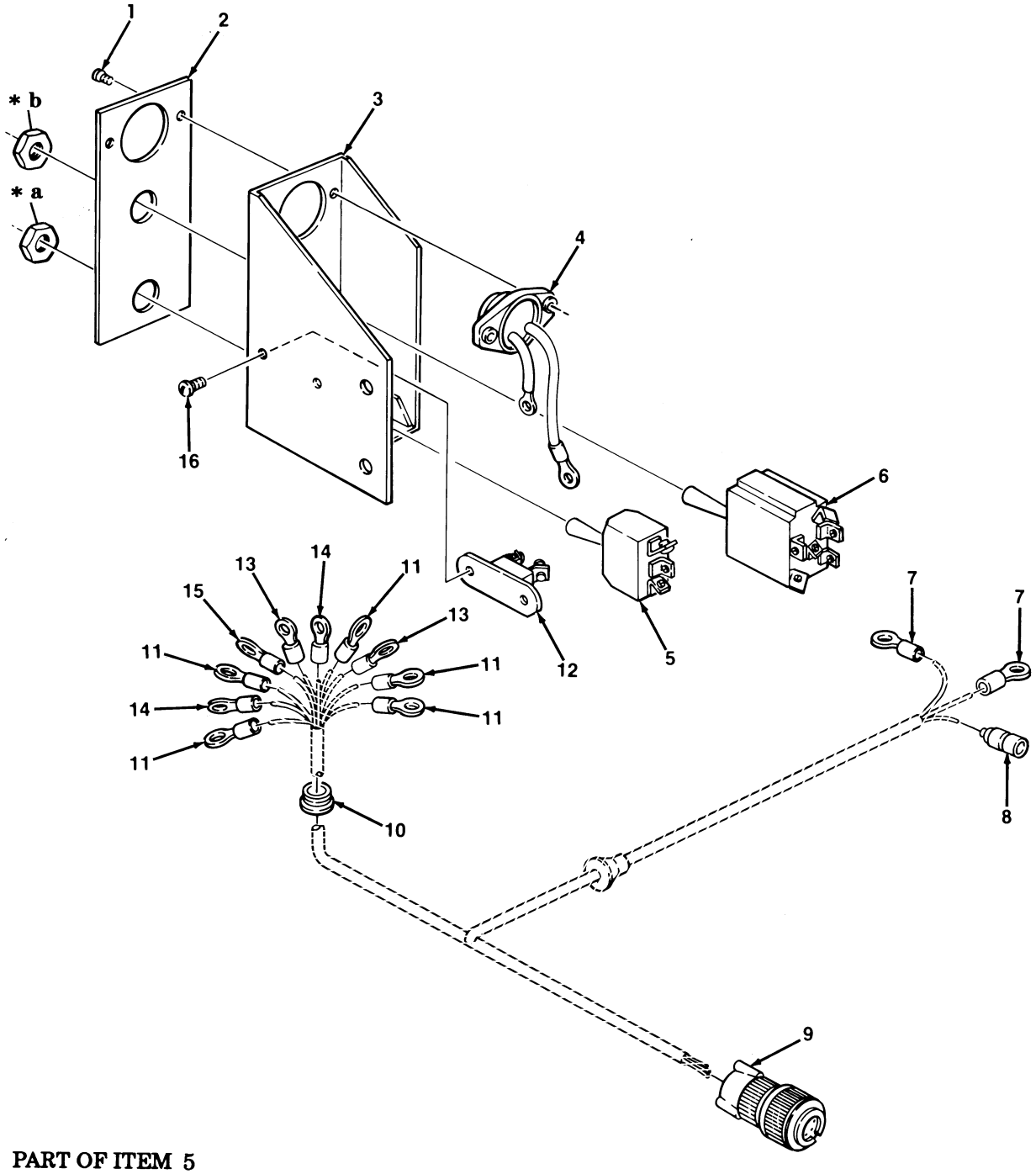

* a PART OF ITEM 5
* b PART OF ITEM 6

Figure 367. Arctic Kit, Control Box Assembly.

(1) ITEM NO	(2) SMR CODE	(3) NSN	(4) CAGEC	(5) PART NUMBER	(6) DESCRIPTION AND USABLE ON CODES(UOC)	(7) QTY
					GROUP 3303 WINTERIZATION KITS	
					FIG. 367 ARCTIC KIT,CONTROL BOX ASSEMBLY	
1	PAOZZ	5305011389540	96906	MS51863-33	SCREW,TAPPING #8-32 X 3/8..... UOC:AVY,A11,A13,A14,A15,A20,A24,A25, A26,A27,B16,B17,B18,HVY,H11,H13,H14, H15,H16,H17,H18,H20,H21,H24,H25,H26, H27,H28,MMM	2
2	PFOZZ	9905011992371	19207	12340442	PLATE,IDENTIFICATIO..... UOC:AVY,A11,A13,A14,A15,A20,A24,A25, A26,A27,B16,B17,B18,HVY,H11,H13,H14, H15,H16,H17,H18,H20,H21,H24,H25,H26, H27,H28,MMM	1
3	XAOZZ		34623	5590544	CONTROL BOX..... UOC:AVY,A11,A13,A14,A15,A20,A24,A25, A26,A27,B16,B17,B18,HVY,H11,H13,H14, H15,H16,H17,H18,H20,H21,H24,H25,H26, H27,H28,MMM	1
4	PAOZZ	6210012032101	19207	12340466	LIGHT,INDICATOR..... UOC:AVY,A11,A13,A14,A15,A20,A24,A25, A26,A27,B16,B17,B18,HVY,H11,H13,H14, H15,H16,H17,H18,H20,H21,H24,H25,H26, H27,H28,MMM	1
5	PAOZZ	5930006551514	96906	MS35058-22	SWITCH,TOGGLE..... UOC:AVY,A11,A13,A14,A15,A20,A24,A25, A26,A27,B16,B17,B18,HVY,H11,H13,H14, H15,H16,H17,H18,H20,H21,H24,H25,H26, H27,H28,MMM	1
6	PAOZZ	5930006157897	96906	MS35059-31	SWITCH,TOGGLE..... UOC:AVY,A11,A13,A14,A15,A20,A24,A25, A26,A27,B16,B17,B18,HVY,H11,H13,H14, H15,H16,H17,H18,H20,H21,H24,H25,H26, H27,H28,MMM	1
7	PAOZZ	5940001139821	96906	MS20659-166	TERMINAL,LUG..... UOC:AVY,A11,A13,A14,A15,A20,A24,A25, A26,A27,B16,B17,B18,HVY,H11,H13,H14, H15,H16,H17,H18,H20,H21,H24,H25,H26, H27,H28,MMM	2
8	PAOZA	5935001677775	96906	MS27144-1	CONNECTOR,PLUG,ELEC..... UOC:AVY,A11,A13,A14,A15,A20,A24,A25, A26,A27,B16,B17,B18,HVY,H11,H13,H14, H15,H16,H17,H18,H20,H21,H24,H25,H26, H27,H28,MMM	1
9	PAOZZ	5935010355139	96906	MS3456W18-11S	CONNECTOR,PLUG,ELEC..... UOC:AVY,A11,A13,A14,A15,A20,A24,A25, A26,A27,B16,B17,B18,HVY,H11,H13,H14, H15,H16,H17,H18,H20,H21,H24,H25,H26, H27,H28,MMM	1
10	PAOZZ	5325002811557	79497	G1895	GROMMET,NONMETALLIC..... UOC:AVY,A11,A13,A14,A15,A20,A24,A25, A26,A27,B16,B17,B18,HVY,H11,H13,H14,	1

(1) ITEM NO	(2) SMR CODE	(3) NSN	(4) CAGEC	(5) PART NUMBER	(6) DESCRIPTION AND USABLE ON CODES(UOC)	(7) QTY
					H15,H16,H17,H18,H20,H21,H24,H25,H26, H27,H28,MMM	
11	PAOZZ	5940002835280	96906	MS25036-106	TERMINAL,LUG..... UOC:AVY,A11,A13,A14,A15,A20,A24,A25, A26,A27,B16,B17,B18,HVY,H11,H13,H14, H15,H16,H17,H18,H20,H21,H24,H25,H26, H27,H28,MMM	5
12	PAOZZ	5925013731034	82647	PSA-25	CIRCUIT BREAKER..... UOC:AVY,A11,A13,A14,A15,A20,A24,A25, A26,A27,B16,B17,B18,HVY,H11,H13,H14, H15,H16,H17,H18,H20,H21,H24,H25,H26, H27,H28,MMM	1
13	PAOZZ	5940002048990	96906	MS25036-111	TERMINAL,LUG..... UOC:AVY,A11,A13,A14,A15,A20,A24,A25, A26,A27,B16,B17,B18,HVY,H11,H13,H14, H15,H16,H17,H18,H20,H21,H24,H25,H26, H27,H28,MMM	2
14	PAOZZ	5940001434775	96906	MS25036-156	TERMINAL,LUG..... UOC:AVY,A11,A13,A14,A15,A20,A24,A25, A26,A27,B16,B17,B18,HVY,H11,H13,H14, H15,H16,H17,H18,H20,H21,H24,H25,H26, H27,H28,MMM	2
15	PAOZZ	5940001434774	96906	MS25036-153	TERMINAL,LUG..... UOC:AVY,A11,A13,A14,A15,A20,A24,A25, A26,A27,B16,B17,B18,HVY,H11,H13,H14, H15,H16,H17,H18,H20,H21,H24,H25,H26, H27,H28,MMM	1
16	PAOZZ	5305009844988	96906	MS35206-228	SCREW,MACHINE #6-32 X 3/8..... UOC:AVY,A11,A13,A14,A15,A20,A24,A25, A26,A27,B16,B17,B18,HVY,H11,H13,H14, H15,H16,H17,H18,H20,H21,H24,H25,H26, H27,H28,MMM	2

END OF FIGURE

9 — 10

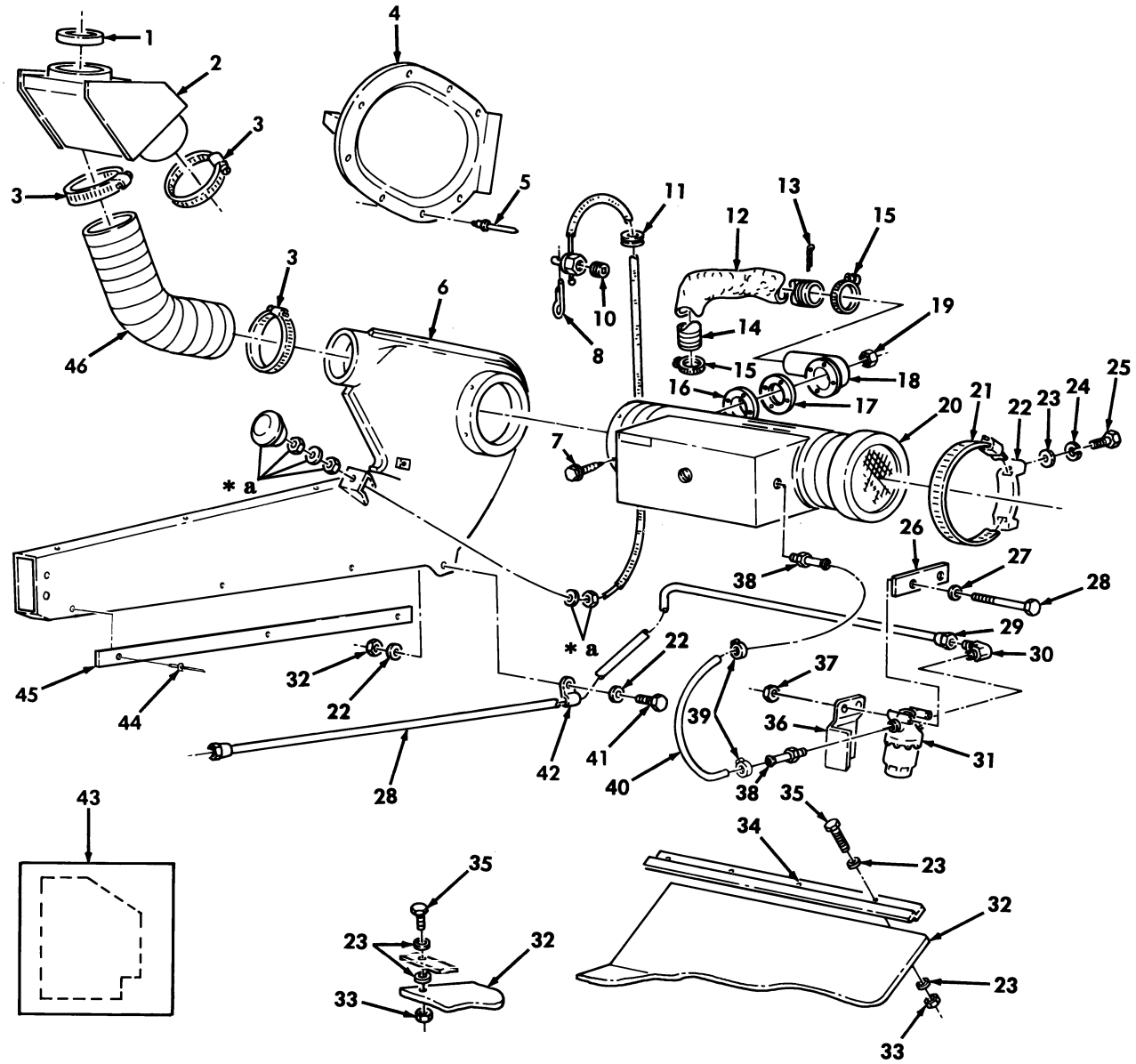

* a PART OF ITEM 9

Figure 368. Arctic Kit, Heater Assembly, Plenum Assembly, and Related Components.

(1) ITEM NO	(2) SMR CODE	(3) NSN	(4) CAGEC	(5) PART NUMBER	(6) DESCRIPTION AND USABLE ON CODES(UOC)	(7) QTY
					GROUP 3303 WINTERIZATION KITS	
					FIG. 368 ARCTIC KIT,HEATER ASSEMBLY, PLENUM ASSEMBLY,AND RELATED COMPONENTS	
1	PAOZZ	5330012039187	34623	5582936	SEAL,NONMETALLIC PART OF KIT P/N 5705698..... UOC:AVY,A11,A13,A14,A15,A20,A24,A25, A26,A27,B16,B17,B18,HVY,H11,H13,H14, H15,H16,H17,H18,H20,H21,H24,H25,H26, H27,H28,MMM	1
2	PFOZZ	2540012936926	19207	12340432	REGULATOR,AIR DUCT PART OF KIT P/N 5705698..... UOC:AVY,A11,A13,A14,A15,A20,A24,A25, A26,A27,B16,B17,B18,HVY,H11,H13,H14, H15,H16,H17,H18,H20,H21,H24,H25,H26, H27,H28,MMM	1
3	PAOZZ	4730009086292	96906	MS35842-14	CLAMP,HOSE PART OF KIT P/N 5705698.. UOC:AVY,A11,A13,A14,A15,A20,A24,A25, A26,A27,B16,B17,B18,HVY,H11,H13,H14, H15,H16,H17,H18,H20,H21,H24,H25,H26, H27,H28,MMM	3
4	PFOZZ	2540011975450	19207	12340434	COVER ASSEMBLY,COWL PART OF KIT P/N 5705698..... UOC:AVY,A11,A13,A14,A15,A20,A24,A25, A26,A27,B16,B17,B18,HVY,H11,H13,H14, H15,H16,H17,H18,H20,H21,H24,H25,H26, H27,H28,MMM	1
5	PFOZZ	5320011357319	80205	NAS9301BNS-6-03	RIVET,BLIND PART OF KIT P/N 5705698. UOC:AVY,A11,A13,A14,A15,A20,A24,A25, A26,A27,B16,B17,B18,HVY,H11,H13,H14, H15,H16,H17,H18,H20,H21,H24,H25,H26, H27,H28,MMM	8
6	PFOZZ	4140012592175	19207	12340477	HOUSING,CENTRIFUGAL PART OF KIT P/N 5705698..... UOC:AVY,A11,A13,A14,A15,A20,A24,A25, A26,A27,B16,B17,B18,HVY,H11,H13,H14, H15,H16,H17,H18,H20,H21,H24,H25,H26, H27,H28,MMM	1
7	PAOZZ	5305012596322	34623	12342499-1	SCREW,MACHINE #10-32 X 1/2 PART OF KIT P/N 5705698..... UOC:AVY,A11,A13,A14,A15,A20,A24,A25, A26,A27,B16,B17,B18,HVY,H11,H13,H14, H15,H16,H17,H18,H20,H21,H24,H25,H26, H27,H28,MMM	1
8	PAOZZ	5315008291480	80205	MS24665-208	PIN,COTTER PART OF KIT P/N 5705698.. UOC:AVY,A11,A13,A14,A15,A20,A24,A25, A26,A27,B16,B17,B18,HVY,H11,H13,H14, H15,H16,H17,H18,H20,H21,H24,H25,H26, H27,H28,MMM	1
9	PAOZZ	5305007246783	96906	MS51965-29	SETSCREW #8-32 X 1/4 PART OF KIT P/N 5705698.....	1

(1) ITEM NO	(2) SMR CODE	(3) NSN	(4) CAGEC	(5) PART NUMBER	(6) DESCRIPTION AND USABLE ON CODES(UOC)	(7) QTY
					UOC:AVY,A11,A13,A14,A15,A20,A24,A25, A26,A27,B16,B17,B18,HVY,H11,H13,H14, H15,H16,H17,H18,H20,H21,H24,H25,H26, H27,H28,MMM	
10	PAOZZ	5325001849846	81349	C3030	GROMMET,NONMETALLIC PART OF KIT P/N 5705698..... UOC:AVY,A11,A13,A14,A15,A20,A24,A25, A26,A27,B16,B17,B18,HVY,H11,H13,H14, H15,H16,H17,H18,H20,H21,H24,H25,H26, H27,H28,MMM	1
11	PAOZZ	2540013946167	19207	12342087-1	SHIELD,HEATER DUCT PART OF KIT P/N 5705698..... UOC:A11,A13,A14,A20,A24,A25,A26,A27, B17,B18,B20,B24,B25,C17,H11,H13,H14, H15,H16,H17,H18,H20,H21,H24,H25,H26, H27,H28,MMM	1
12	PAOZZ	5315002857161	80205	MS24665-377	PIN,COTTER PART OF KIT P/N 5705698.. UOC:AVY,A11,A13,A14,A15,A20,A24,A25, A26,A27,B16,B17,B18,HVY,H11,H13,H14, H15,H16,H17,H18,H20,H21,H24,H25,H26, H27,H28,MMM	3
13	PAOZZ	2990013229881	19207	12342091	CONNECTOR,EXHAUST P PART OF KIT P/N 5705698..... UOC:AVY,A11,A13,A14,A15,A20,A24,A25, A26,A27,B16,B17,B18,HVY,H11,H13,H14, H15,H16,H17,H18,H20,H21,H24,H25,H26, H27,H28,MMM	1
14	PAOZZ	4730009083193	66295	WWD48-58H	CLAMP,HOSE PART OF KIT P/N 5705698.. UOC:AVY,A11,A13,A14,A15,A20,A24,A25, A26,A27,B16,B17,B18,HVY,H11,H13,H14, H15,H16,H17,H18,H20,H21,H24,H25,H26, H27,H28,MMM	2
15	PAOZZ	4730013229871	19207	12342083	FLANGE,PIPE PART OF KIT P/N 5705698. UOC:AVY,A11,A13,A14,A15,A20,A24,A25, A26,A27,B16,B17,B18,HVY,H11,H13,H14, H15,H16,H17,H18,H20,H21,H24,H25,H26, H27,H28,MMM	1
16	PAOZZ	2540011231218	19207	12275161	THERMASEAL,HEATER PART OF KIT P/N 5705698..... UOC:AVY,A11,A13,A14,A15,A20,A24,A25, A26,A27,B16,B17,B18,HVY,H11,H13,H14, H15,H16,H17,H18,H20,H21,H24,H25,H26, H27,H28,MMM	1
17	PAOZZ	2990013229879	19207	12342093	CONNECTOR,EXHAUST P PART OF KIT P/N 5705698..... UOC:AVY,A11,A13,A14,A15,A20,A24,A25, A26,A27,B16,B17,B18,HVY,H11,H13,H14, H15,H16,H17,H18,H20,H21,H24,H25,H26, H27,H28,MMM	1
18	PAOZZ	5310009359022	96906	MS51943-32	NUT,SELF-LOCKING,HE 1/4-20 PART OF KIT P/N 5705698..... UOC:AVY,A11,A13,A14,A15,A20,A24,A25, A26,A27,B16,B17,B18,HVY,H11,H13,H14,	4

(1) ITEM NO	(2) SMR CODE	(3) NSN	(4) CAGEC	(5) PART NUMBER	(6) DESCRIPTION AND USABLE ON CODES(UOC)	(7) QTY
					H15,H16,H17,H18,H20,H21,H24,H25,H26, H27,H28,MMM	
19	PAOFF	2540011943323	81349	MIL-PRF-62550/3	HEATER,VEHICULAR,CO..... UOC:AVY,A11,A13,A14,A15,A20,A24,A25, A26,A27,B16,B17,B18,HVY,H11,H13,H14, H15,H16,H17,H18,H20,H21,H24,H25,H26, H27,H28,MMM	1
20	PAOZZ	4730009086294	17576	A-A-52506	CLAMP,HOSE PART OF KIT P/N 5705698 UOC:AVY,A11,A13,A14,A15,A20,A24,A25, A26,A27,B16,B17,B18,HVY,H11,H13,H14, H15,H16,H17,H18,H20,H21,H24,H25,H26, H27,H28,MMM	2
21	PAOZZ	5340012043904	19207	12340448	BRACKET,MOUNTING PART OF KIT P/N 5705698..... UOC:AVY,A11,A13,A14,A15,A20,A24,A25, A26,A27,B16,B17,B18,HVY,H11,H13,H14, H15,H16,H17,H18,H20,H21,H24,H25,H26, H27,H28,MMM	2
22	PAOZZ	5310008094058	96906	MS27183-10	WASHER,FLAT 1/4 PART OF KIT P/N 5705698..... UOC:AVY,A11,A13,A14,A15,A20,A24,A25, A26,A27,B16,B17,B18,HVY,H11,H13,H14, H15,H16,H17,H18,H20,H21,H24,H25,H26, H27,H28,MMM	22
23	PAOZZ	5310005825965	96906	MS35338-44	WASHER,LOCK 1/4 PART OF KIT P/N 5705698..... UOC:AVY,A11,A13,A14,A15,A20,A24,A25, A26,A27,B16,B17,B18,HVY,H11,H13,H14, H15,H16,H17,H18,H20,H21,H24,H25,H26, H27,H28,MMM	4
24	PAOZZ	5305000712506	80204	B1821BH025C050N	SCREW,CAP,HEXAGON H 1/4-20 X 1/2 PART OF KIT P/N 5705698..... UOC:AVY,A11,A13,A14,A15,A20,A24,A25, A26,A27,B16,B17,B18,HVY,H11,H13,H14, H15,H16,H17,H18,H20,H21,H24,H25,H26, H27,H28,MMM	4
25	PAOZZ	5365013261153	19207	12342092	SPACER,PLATE PART OF KIT P/N 5705698 UOC:AVY,A11,A13,A14,A15,A20,A24,A25, A26,A27,B16,B17,B18,HVY,H11,H13,H14, H15,H16,H17,H18,H20,H21,H24,H25,H26, H27,H28,MMM	1
26	PAOZZ	5310000145850	96906	MS27183-42	WASHER,FLAT 7/32 PART OF KIT P/N 5705698..... UOC:AVY,A11,A13,A14,A15,A20,A24,A25, A26,A27,B16,B17,B18,HVY,H11,H13,H14, H15,H16,H17,H18,H20,H21,H24,H25,H26, H27,H28,MMM	2
27	PAOZZ	5305009956311	96906	MS35207-271	SCREW,MACHINE #10-24 X 1.75 PART OF KIT P/N 5705698..... UOC:AVY,A11,A13,A14,A15,A20,A24,A25, A26,A27,B16,B17,B18,HVY,H11,H13,H14, H15,H16,H17,H18,H20,H21,H24,H25,H26, H27,H28,MMM	2

(1) ITEM NO	(2) SMR CODE	(3) NSN	(4) CAGEC	(5) PART NUMBER	(6) DESCRIPTION AND USABLE ON CODES(UOC)	(7) QTY
28	PAOZZ	4710012031304	34623	5583352	TUBE ASSEMBLY,METAL PART OF KIT P/N 5705698..... UOC:AVY,A11,A13,A14,A15,A20,A24,A25, A26,A27,B16,B17,B18,HVY,H11,H13,H14, H15,H16,H17,H18,H20,H21,H24,H25,H26, H27,H28,MMM	1
29	PAOZZ	4730012045457	81343	5-2 010203CA	ELBOW,PIPE TO TUBE PART OF KIT P/N 5705698..... UOC:AVY,A11,A13,A14,A15,A20,A24,A25, A26,A27,B16,B17,B18,HVY,H11,H13,H14, H15,H16,H17,H18,H20,H21,H24,H25,H26, H27,H28,MMM	1
30	PAOZZ	2910014458097	58536	A52972-1	FILTER,FLUID PART OF KIT P/N 5705698 UOC:AVY,A11,A13,A14,A15,A20,A24,A25, A26,A27,B16,B17,B18,HVY,H11,H13,H14, H15,H16,H17,H18,H20,H21,H24,H25,H26, H27,H28,MMM	1
31	PAOZZ	2510013761092	34623	12339909	INSULATION PART OF KIT P/N 5705698.. UOC:AVY,A11,A13,A14,A15,A20,A24,A25, A26,A27,B16,B17,B18,HVY,H11,H13,H14, H15,H16,H17,H18,H20,H21,H24,H25,H26, H27,H28,MMM	1
32	PAOZZ	5310000614650	96906	MS51943-31	NUT,SELF-LOCKING,HE 1/4-20 PART OF KIT P/N 5705698..... UOC:AVY,A11,A13,A14,A15,A20,A24,A25, A26,A27,B16,B17,B18,HVY,H11,H13,H14, H15,H16,H17,H18,H20,H21,H24,H25,H26, H27,H28,MMM	9
33	PAOZZ	2590012633254	19207	12338838-2	BEZEL,AUTOMOTIVE TR PART OF KIT P/N 5705698..... UOC:AVY,A11,A13,A14,A15,A20,A24,A25, A26,A27,B16,B17,B18,HVY,H11,H13,H14, H15,H16,H17,H18,H20,H21,H24,H25,H26, H27,H28,MMM	1
34	PAOZZ	5305002253843	80204	B1821BH025C100N	SCREW,CAP,HEXAGON H 1/4-20 X 1.00 PART OF KIT P/N 5705698..... UOC:AVY,A11,A13,A14,A15,A20,A24,A25, A26,A27,B16,B17,B18,HVY,H11,H13,H14, H15,H16,H17,H18,H20,H21,H24,H25,H26, H27,H28,MMM	8
35	PAOZZ	2910013230123	19207	12342086	GUARD,FUEL FILTER PART OF KIT P/N 5705698..... UOC:AVY,A11,A13,A14,A15,A20,A24,A25, A26,A27,B16,B17,B18,HVY,H11,H13,H14, H15,H16,H17,H18,H20,H21,H24,H25,H26, H27,H28,MMM	1
36	PAOZZ	5310008775797	80205	MS21044N3	NUT,SELF-LOCKING,HE 3/16-32 PART OF KIT P/N 5705698..... UOC:AVY,A11,A13,A14,A15,A20,A24,A25, A26,A27,B16,B17,B18,HVY,H11,H13,H14, H15,H16,H17,H18,H20,H21,H24,H25,H26, H27,H28,MMM	2
37	PAOZZ	4730013948345	34623	12340331	ADAPTER,STRAIGHT,PI PART OF KIT P/N	2

(1) ITEM NO	(2) SMR CODE	(3) NSN	(4) CAGEC	(5) PART NUMBER	(6) DESCRIPTION AND USABLE ON CODES(UOC)	(7) QTY
					5705698..... UOC:AVY,A11,A13,A14,A15,A20,A24,A25, A26,A27,B16,B17,B18,HVY,H11,H13,H14, H15,H16,H17,H18,H20,H21,H24,H25,H26, H27,H28,MMM	
38	PAOZZ	4730000243971	19207	12339884-1	CLAMP,HOSE PART OF KIT P/N 5705698.. UOC:AVY,A11,A13,A14,A15,A20,A24,A25, A26,A27,B16,B17,B18,HVY,H11,H13,H14, H15,H16,H17,H18,H20,H21,H24,H25,H26, H27,H28,MMM	2
39	PAOZZ	4720013162538	9C234	12338553-1	HOSE,NONMETALLIC PART OF KIT P/N 5705698..... UOC:AVY,A11,A13,A14,A15,A20,A24,A25, A26,A27,B16,B17,B18,HVY,H11,H13,H14, H15,H16,H17,H18,H20,H21,H24,H25,H26, H27,H28,MMM	1
40	PAOZZ	5305000680508	80204	B1821BH025C075N	SCREW,CAP,HEXAGON H 1/4-20 X .75 PART OF KIT P/N 5705698..... UOC:AVY,A11,A13,A14,A15,A20,A24,A25, A26,A27,B16,B17,B18,HVY,H11,H13,H14, H15,H16,H17,H18,H20,H21,H24,H25,H26, H27,H28,MMM	1
41	PAOZZ	3040011975510	34623	12340829-1	CABLE,CONTROL PART OF KIT P/N 5705698..... UOC:AVY,A11,A13,A14,A15,A20,A24,A25, A26,A27,B16,B17,B18,HVY,H11,H13,H14, H15,H16,H17,H18,H20,H21,H24,H25,H26, H27,H28,MMM	1
42	PAOZZ	5340009936207	96906	MS21333-99	CLAMP,LOOP PART OF KIT P/N 5705698.. UOC:AVY,A11,A13,A14,A15,A20,A24,A25, A26,A27,B16,B17,B18,HVY,H11,H13,H14, H15,H16,H17,H18,H20,H21,H24,H25,H26, H27,H28,MMM	1
43	KFFZZ		19207	12340706	TEMPLATE PART OF KIT P/N 5705698.... UOC:AVY,A11,A13,A14,A15,A20,A24,A25, A26,A27,B16,B17,B18,HVY,H11,H13,H14, H15,H16,H17,H18,H20,H21,H24,H25,H26, H27,H28,MMM	1
* 44	PAOZZ	5320008503282	81349	M24243/1-A408	RIVET,BLIND..... UOC:AVY,A11,A13,A14,A15,A20,A24,A25, A26,A27,B16,B17,B18,HVY,H11,H13,H14, H15,H16,H17,H18,H20,H21,H24,H25,H26, H27,H28,MMM	6
* 45	PAOZZ	5340014989619	19207	12340589-1	RETAINER R.H..... UOC:AVY,A11,A13,A14,A15,A20,A24,A25, A26,A27,B16,B17,B18,HVY,H11,H13,H14, H15,H16,H17,H18,H20,H21,H24,H25,H26, H27,H28,MMM	1
* 45	PAOZZ	5340014989625	19207	12340589-2	RETAINER L.H..... UOC:AVY,A11,A13,A14,A15,A20,A24,A25, A26,A27,B16,B17,B18,HVY,H11,H13,H14, H15,H16,H17,H18,H20,H21,H24,H25,H26, H27,H28,MMM	1

(1) ITEM NO	(2) SMR CODE	(3) NSN	(4) CAGEC	(5) PART NUMBER	(6) DESCRIPTION AND USABLE ON CODES(UOC)	(7) QTY
* 46	PAOZZ	4720013946170	19207	12339265-10	HOSE,AIR DUCT PART OF KIT P/N 5705698..... UOC:AVY,A11,A13,A14,A15,A20,A24,A25, A26,A27,B16,B17,B18,HVY,H11,H13,H14, H15,H16,H17,H18,H20,H21,H24,H25,H26, H27,H28,MMM	1

END OF FIGURE

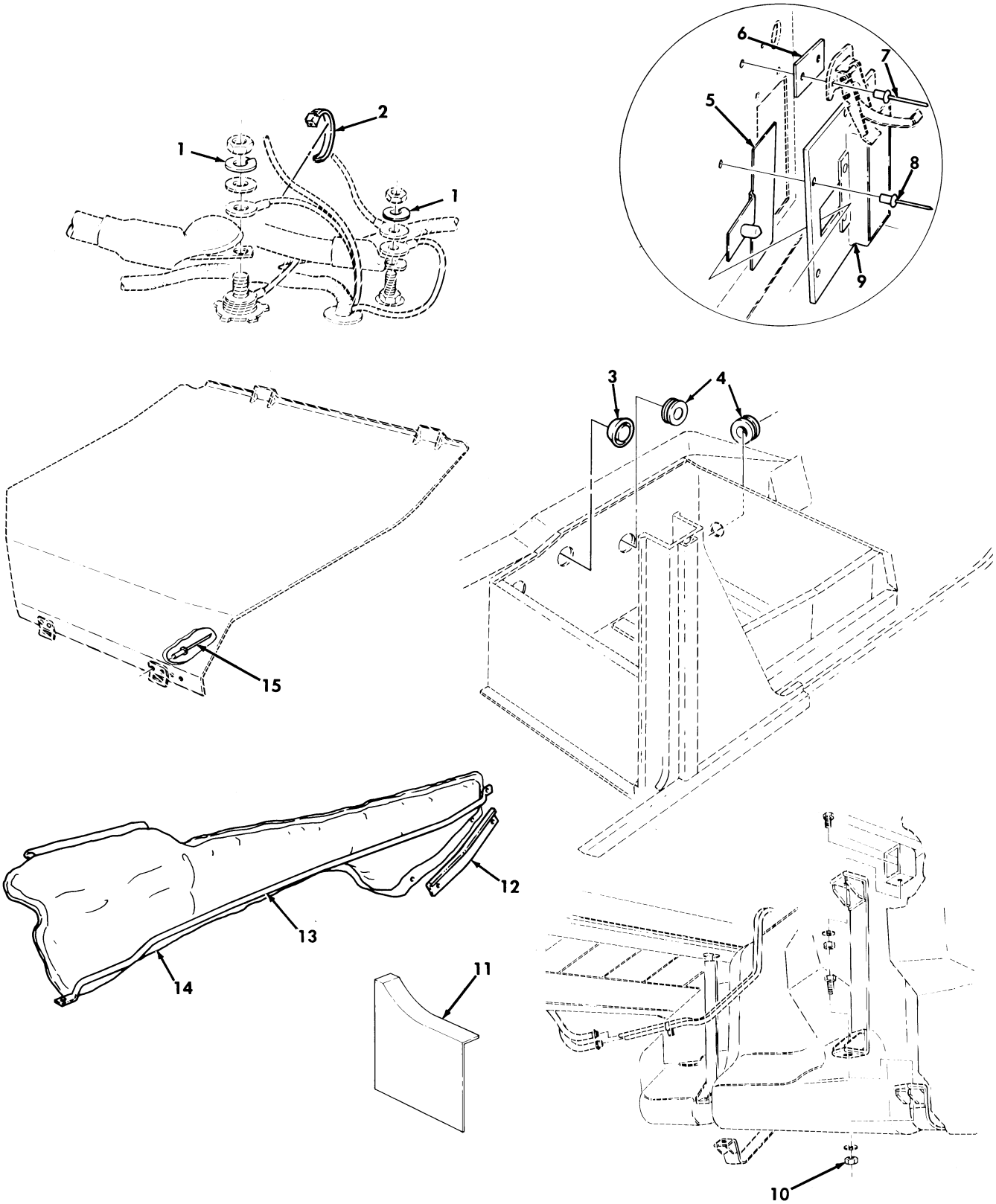

Figure 369. Arctic Kit, Battery Box Components, Insulation, and Control Box Connector.

(1) ITEM NO	(2) SMR CODE	(3) NSN	(4) CAGEC	(5) PART NUMBER	(6) DESCRIPTION AND USABLE ON CODES(UOC)	(7) QTY
					GROUP 3303 WINTERIZATION KITS	
					FIG. 369 ARCTIC KIT,BATTERY BOX COMPONENTS,INSULATION,AND CONTROL BOX CONNECTOR	
1	PAOZZ	5310005845272	96906	MS35338-48	WASHER,LOCK 1/2,PART OF KIT P/N 5705698..... UOC:AVY,A11,A13,A14,A15,A20,A24,A25, A26,A27,B16,B17,B18,HVY,H11,H13,H14, H15,H16,H17,H18,H20,H21,H24,H25,H26, H27,H28,MMM	2
2	PAOZZ	5975010345871	96906	MS3367-7-0	STRAP,TIEDOWN,ELECT PART OF KIT P/N 5705698..... UOC:AVY,A11,A13,A14,A15,A20,A24,A25, A26,A27,B16,B17,B18,HVY,H11,H13,H14, H15,H16,H17,H18,H20,H21,H24,H25,H26, H27,H28,MMM	1
3	PAOZZ	5340013950812	19207	12340791	PLUG,EXPANSION PART OF KIT P/N 5705698..... UOC:AVY,A11,A13,A14,A15,A20,A24,A25, A26,A27,B16,B17,B18,HVY,H11,H13,H14, H15,H16,H17,H18,H20,H21,H24,H25,H26, H27,H28,MMM	3
4	PAOZZ	5325002766091	96906	MS35489-19	GROMMET,NONMETALLIC PART OF KIT P/N 5705698..... UOC:AVY,A11,A13,A14,A15,A20,A24,A25, A26,A27,B16,B17,B18,HVY,H11,H13,H14, H15,H16,H17,H18,H20,H21,H24,H25,H26, H27,H28,MMM	2
5	PAOZZ	2540014073296	34623	12342572	DOOR ASSEMBLY,ARCTI PART OF KIT P/N 5705698..... UOC:AVY,A11,A13,A14,A15,A20,A24,A25, A26,A27,B16,B17,B18,HVY,H11,H13,H14, H15,H16,H17,H18,H20,H21,H24,H25,H26, H27,H28,MMM	1
6	PAOZZ	5365013942394	19207	12342752	SPACER,PLATE PART OF KIT P/N 5705698 UOC:AVY,A11,A13,A14,A15,A20,A24,A25, A26,A27,B16,B17,B18,HVY,H11,H13,H14, H15,H16,H17,H18,H20,H21,H24,H25,H26, H27,H28,MMM	1
7	PAOZZ	5320012716357	19207	12339355-1	RIVET,BLIND PART OF KIT P/N 5705698. UOC:AVY,A11,A13,A14,A15,A20,A24,A25, A26,A27,B16,B17,B18,HVY,H11,H13,H14, H15,H16,H17,H18,H20,H21,H24,H25,H26, H27,H28,MMM	2
8	PAOZZ	5320011357319	80205	NAS9301BNS-6-03	RIVET,BLIND PART OF KIT P/N 5705698. UOC:AVY,A11,A13,A14,A15,A20,A24,A25, A26,A27,B16,B17,B18,HVY,H11,H13,H14, H15,H16,H17,H18,H20,H21,H24,H25,H26, H27,H28,MMM	4
9	PAOZZ	5340013947853	19207	12342571	PLATE,MOUNTING PART OF KIT P/N 5705698.....	1

(1) ITEM NO	(2) SMR CODE	(3) NSN	(4) CAGEC	(5) PART NUMBER	(6) DESCRIPTION AND USABLE ON CODES(UOC)	(7) QTY
					UOC:AVY,A11,A13,A14,A15,A20,A24,A25, A26,A27,B16,B17,B18,HVY,H11,H13,H14, H15,H16,H17,H18,H20,H21,H24,H25,H26, H27,H28,MMM	
10	PAOZZ	5310009359021	96906	MS51943-35	NUT,SELF-LOCKING,HE 3/8-16 PART OF KIT P/N 5705698..... UOC:AVY,A11,A13,A14,A15,A20,A24,A25, A26,A27,B16,B17,B18,HVY,H11,H13,H14, H15,H16,H17,H18,H20,H21,H24,H25,H26, H27,H28,MMM	4
11	PAOZZ	5340013939371	19207	12342573	BRACKET,DOUBLE ANGL RIGHT BODY SIDE RAIL PART OF KIT P/N 5705698... UOC:AVY,A11,A13,A14,A15,A20,A24,A25, A26,A27,B16,B17,B18,HVY,H11,H13,H14, H15,H16,H17,H18,H20,H21,H24,H25,H26, H27,H28,MMM	1
12	PAOZZ	2590012616851	19207	12339014-2	BEZEL,AUTOMOTIVE TR..... UOC:AVY,A11,A13,A14,A15,A20,A24,A25, A26,A27,B16,B17,B18,HVY,H11,H13,H14, H15,H16,H17,H18,H20,H21,H24,H25,H26, H27,H28,MMM	1
13	PAOZZ	2590012578787	19207	12340591	RETAINER,INTERIOR PART OF KIT P/N 5705698..... UOC:AVY,A11,A13,A14,A20,A24,A25,A26, A27,B16,B17,B18,HVY,H11,H13,H14,H16, H17,H18,H20,H21,H24,H25,H26,H27,H28, MMM	1
13	PAOZZ	2540014525034	19207	12340591-1	RETAINER,INTERIOR PART OF KIT P/N 5705698..... UOC:A15,H15	1
14	PAOZA	2540014611134	19207	12340593-1	INSULATION,THERMAL, PART OF KIT P/N 5705698..... UOC:AVY,A11,A13,A14,A20,A24,A25,A26, A27,B16,B17,B18,HVY,H11,H13,H14,H16, H17,H18,H20,H21,H24,H25,H26,H27,H28, MMM	1
14	PAOZA	2540014611134	34623	12340593-1	INSULATION,THERMAL, PART OF KIT P/N 5705698..... UOC:A15,H15	1
15	PAOZZ	5320011435079	80205	NAS9301BNS-4-04	RIVET,BLIND PART OF KIT P/N 5705698. UOC:A11,A13,A14,A20,A24,A25,A26,A27, B17,B18,B20,B24,B25,C17,H11,H13,H14, H15,H16,H17,H18,H20,H21,H24,H25,H26, H27,H28,MMM	2

END OF FIGURE

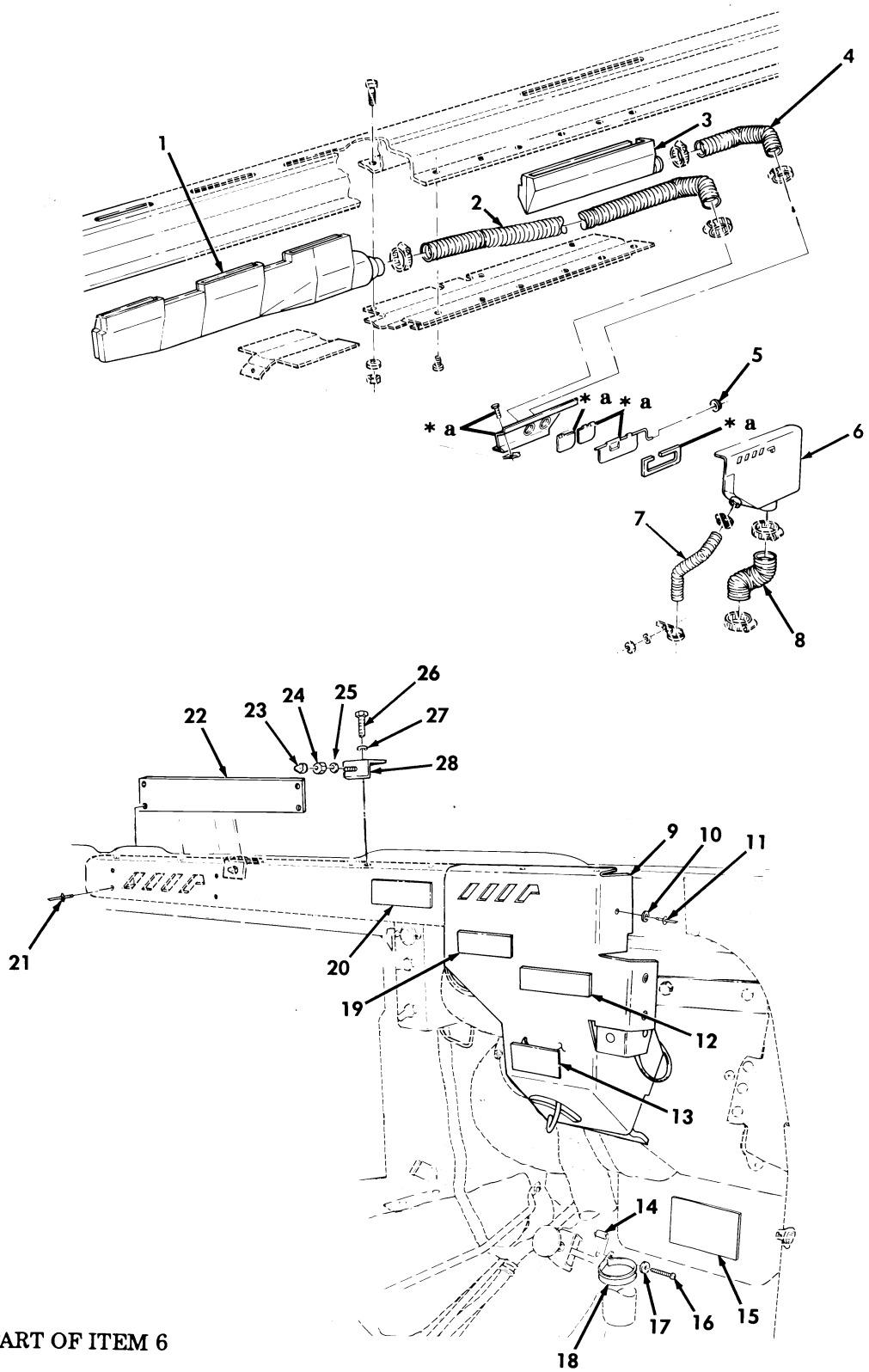

* a PART OF ITEM 6

Figure 370. Arctic Kit, Diverter Box, Defroster, Heater Ducting, and Radio Rack Bracket.

(1) ITEM NO	(2) SMR CODE	(3) NSN	(4) CAGEC	(5) PART NUMBER	(6) DESCRIPTION AND USABLE ON CODES(UOC)	(7) QTY
					GROUP 3303 WINTERIZATION KITS	
					FIG. 370 ARCTIC KIT,DIVERTER BOX, DEFROSTER,HEATER DUCTING,AND RADIO RACK BRACKET	
1	PFOZZ	2540012573742	34623	12339289-2	VENTILATOR,AIR CIRC L.H.,PART OF KIT P/N 5705698..... UOC:AVY,A11,A13,A14,A15,A20,A24,A25, A26,A27,B16,B17,B18,HVY,H11,H13,H14, H15,H16,H17,H18,H20,H21,H24,H25,H26, H27,H28,MMM	1
2	PAOZZ	4720013946166	19207	12339265-6	HOSE,AIR DUCT PART OF KIT P/N 5705698..... UOC:AVY,A11,A13,A14,A15,A20,A24,A25, A26,A27,B16,B17,B18,HVY,H11,H13,H14, H15,H16,H17,H18,H20,H21,H24,H25,H26, H27,H28,MMM	1
3	PAOZZ	2540013905711	34623	5591935	VENTILATOR,AIR CIRC R.H.,PART OF KIT P/N 5705698..... UOC:AVY,A11,A13,A14,A15,A20,A24,A25, A26,A27,B16,B17,B18,HVY,H11,H13,H14, H15,H16,H17,H18,H20,H21,H24,H25,H26, H27,H28,MMM	1
4	PAOZZ	4720013256985	19207	12339265-7	HOSE,AIR DUCT PART OF KIT P/N 5705698..... UOC:AVY,A11,A13,A14,A15,A20,A24,A25, A26,A27,B16,B17,B18,HVY,H11,H13,H14, H15,H16,H17,H18,H20,H21,H24,H25,H26, H27,H28,MMM	1
5	PAOZZ	5340013327599	19207	12340258	BUTTON,PLUG PART OF KIT P/N 5705698 UOC:AVY,A11,A13,A14,A15,A20,A24,A25, A26,A27,B16,B17,B18,HVY,H11,H13,H14, H15,H16,H17,H18,H20,H21,H24,H25,H26, H27,H28,MMM	1
6	PFOZZ	2540013954202	19207	12342570	VENTILATOR,AIR CIRC PART OF KIT P/N 5705698..... UOC:AVY,A11,A13,A14,A15,A20,A24,A25, A26,A27,B16,B17,B18,HVY,H11,H13,H14, H15,H16,H17,H18,H20,H21,H24,H25,H26, H27,H28,MMM	1
7	PAOZZ	4720014510894	19207	12339265-16	HOSE,AIR DUCT PART OF KIT P/N 5705698..... UOC:AVY,A11,A13,A14,A15,A20,A24,A25, A26,A27,B16,B17,B18,HVY,H11,H13,H14, H15,H16,H17,H18,H20,H21,H24,H25,H26, H27,H28,MMM	1
8	PAOZZ	4720013946170	19207	12339265-10	HOSE,AIR DUCT PART OF KIT P/N 5705698..... UOC:AVY,A11,A13,A14,A15,A20,A24,A25, A26,A27,B16,B17,B18,HVY,H11,H13,H14, H15,H16,H17,H18,H20,H21,H24,H25,H26, H27,H28,MMM	1

(1) ITEM NO	(2) SMR CODE	(3) NSN	(4) CAGEC	(5) PART NUMBER	(6) DESCRIPTION AND USABLE ON CODES(UOC)	(7) QTY
9	PAOZZ	2540012546511	19207	12340470	ARCTIC COVER,DIVERT PART OF KIT P/N 5705698..... UOC:AVY,A11,A13,A14,A15,A20,A24,A25, A26,A27,B16,B17,B18,HVY,H11,H13,H14, H15,H16,H17,H18,H20,H21,H24,H25,H26, H27,H28,MMM	1
10	PAOZZ	2540012546511	24617	11500362	WASHER,FLAT PART OF KIT P/N 5705698 UOC:AVY,A11,A13,A14,A15,A20,A24,A25, A26,A27,B16,B17,B18,HVY,H11,H13,H14, H15,H16,H17,H18,H20,H21,H24,H25,H26, H27,H28,MMM	1
11	PAOZZ	5320010232529	81349	M24243/1-A404	RIVET,BLIND PART OF KIT P/N 5705698 UOC:AVY,A11,A13,A14,A15,A20,A24,A25, A26,A27,B16,B17,B18,HVY,H11,H13,H14, H15,H16,H17,H18,H20,H21,H24,H25,H26, H27,H28,MMM	4
12	PAOZZ	9905013973196	19207	12342648	PLATE,INSTRUCTION PART OF KIT P/N 5705698..... UOC:AVY,A11,A13,A14,A15,A20,A24,A25, A26,A27,B16,B17,B18,HVY,H11,H13,H14, H15,H16,H17,H18,H20,H21,H24,H25,H26, H27,H28,MMM	1
13	PAOZZ	9905012487656	19207	12339108	PLATE,INSTRUCTION PART OF KIT P/N 5705698..... UOC:AVY,A11,A13,A14,A15,A20,A24,A25, A26,A27,B16,B17,B18,HVY,H11,H13,H14, H15,H16,H17,H18,H20,H21,H24,H25,H26, H27,H28,MMM	1
14	PAOZZ	5365013940440	19207	12342751	SPACER,SLEEVE PART OF KIT P/N 5705698..... UOC:AVY,A11,A13,A14,A15,A20,A24,A25, A26,A27,B16,B17,B18,HVY,H11,H13,H14, H15,H16,H17,H18,H20,H21,H24,H25,H26, H27,H28,MMM	1
15	PAOZZ	7690014078248	19207	12342806	MARKER,IDENTIFICATI PART OF KIT P/N 5705698..... UOC:AVY,A11,A13,A14,A15,A20,A24,A25, A26,A27,B16,B17,B18,HVY,H11,H13,H14, H15,H16,H17,H18,H20,H21,H24,H25,H26, H27,H28,MMM	1
16	PAOZZ	5305013943543	24617	9415778	SCREW,CAP,HEXAGON H PART OF KIT P/N 5705698..... UOC:AVY,A11,A13,A14,A15,A20,A24,A25, A26,A27,B16,B17,B18,HVY,H11,H13,H14, H15,H16,H17,H18,H20,H21,H24,H25,H26, H27,H28,MMM	1
17	PAOZZ	5310000453296	30379	120217	WASHER,LOCK #10,PART OF KIT P/N 5705698..... UOC:A11,A13,A14,A20,A24,A25,A26,A27, B17,B18,B20,B24,B25,C17,H11,H13,H14, H15,H16,H17,H18,H20,H21,H24,H25,H26, H27,H28,MMM	1
18	PAOZZ	5340001934111	96906	MS21333-86	CLAMP,LOOP PART OF KIT P/N 5705698.	1

(1) ITEM NO	(2) SMR CODE	(3) NSN	(4) CAGEC	(5) PART NUMBER	(6) DESCRIPTION AND USABLE ON CODES(UOC)	(7) QTY
					UOC:AVY,A11,A13,A14,A15,A20,A24,A25, A26,A27,B16,B17,B18,HVY,H11,H13,H14, H15,H16,H17,H18,H20,H21,H24,H25,H26, H27,H28,MMM	
19	PAOZZ	9905012039994	19207	12339100	PLATE,INSTRUCTION PART OF KIT P/N 5705698..... UOC:AVY,A11,A13,A14,A15,A20,A24,A25, A26,A27,B16,B17,B18,HVY,H11,H13,H14, H15,H16,H17,H18,H20,H21,H24,H25,H26, H27,H28,MMM	1
20	PAOZZ	9905011934065	19207	12339106	PLATE,INSTRUCTION PART OF KIT P/N 5705698..... UOC:AVY,A11,A13,A14,A15,A20,A24,A25, A26,A27,B16,B17,B18,HVY,H11,H13,H14, H15,H16,H17,H18,H20,H21,H24,H25,H26, H27,H28,MMM	1
21	PAOZZ	5320010195694	81349	M24243/1A402	RIVET,BLIND PART OF KIT P/N 5705698 UOC:AVY,A11,A13,A14,A15,A20,A24,A25, A26,A27,B16,B17,B18,HVY,H11,H13,H14, H15,H16,H17,H18,H20,H21,H24,H25,H26, H27,H28,MMM	4
22	PAOZZ	5340013947288	19207	12342754	COVER,ACCESS PART OF KIT P/N 5705698 UOC:AVY,A11,A13,A14,A15,A20,A24,A25, A26,A27,B16,B17,B18,HVY,H11,H13,H14, H15,H16,H17,H18,H20,H21,H24,H25,H26, H27,H28,MMM	1
23	PAOZZ	5340011744894	81349	M5501/11-F1	CAP,PROTECTIVE DUST PART OF KIT P/N 5705698..... UOC:AVY,A11,A13,A14,A15,A20,A24,A25, A26,A27,B16,B17,B18,HVY,H11,H13,H14, H15,H16,H17,H18,H20,H21,H24,H25,H26, H27,H28,MMM	2
24	PAOZZ	5310000120367	24617	120367	NUT,PLAIN,HEXAGON PART OF KIT P/N 5705698..... UOC:AVY,A11,A13,A14,A15,A20,A24,A25, A26,A27,B16,B17,B18,HVY,H11,H13,H14, H15,H16,H17,H18,H20,H21,H24,H25,H26, H27,H28,MMM	2
25	PAOZZ	5310000446188	24617	446188	WASHER,FLAT PART OF KIT P/N 5705698 UOC:A11,A13,A14,A20,A24,A25,A26,A27, B17,B18,B20,B24,B25,C17,H11,H13,H14, H15,H16,H17,H18,H20,H21,H24,H25,H26, H27,H28,MMM	2
26	PAOZZ	5305005434372	80204	B1821BH038C075N	SCREW,CAP,HEXAGON H PART OF KIT P/N 5705698..... UOC:AVY,A11,A13,A14,A15,A20,A24,A25, A26,A27,B16,B17,B18,HVY,H11,H13,H14, H15,H16,H17,H18,H20,H21,H24,H25,H26, H27,H28,MMM	2
27	PAOZZ	5310000446212	24617	446212	WASHER,FLAT PART OF KIT P/N 5705698 UOC:AVY,A11,A13,A14,A15,A20,A24,A25, A26,A27,B16,B17,B18,HVY,H11,H13,H14, H15,H16,H17,H18,H20,H21,H24,H25,H26,	2

(1) ITEM NO	(2) SMR CODE	(3) NSN	(4) CAGEC	(5) PART NUMBER	(6) DESCRIPTION AND USABLE ON CODES(UOC)	(7) QTY
					H27,H28,MMM	
28	PAOZZ	2590014398268	34623	12446763	BRACKET,ANGLE PART OF KIT P/N 5705698..... UOC:AVY,A11,A13,A14,A15,A20,A24,A25, A26,A27,B16,B17,B18,HVY,H11,H13,H14, H15,H16,H17,H18,H20,H21,H24,H25,H26, H27,H28,MMM	2

END OF FIGURE

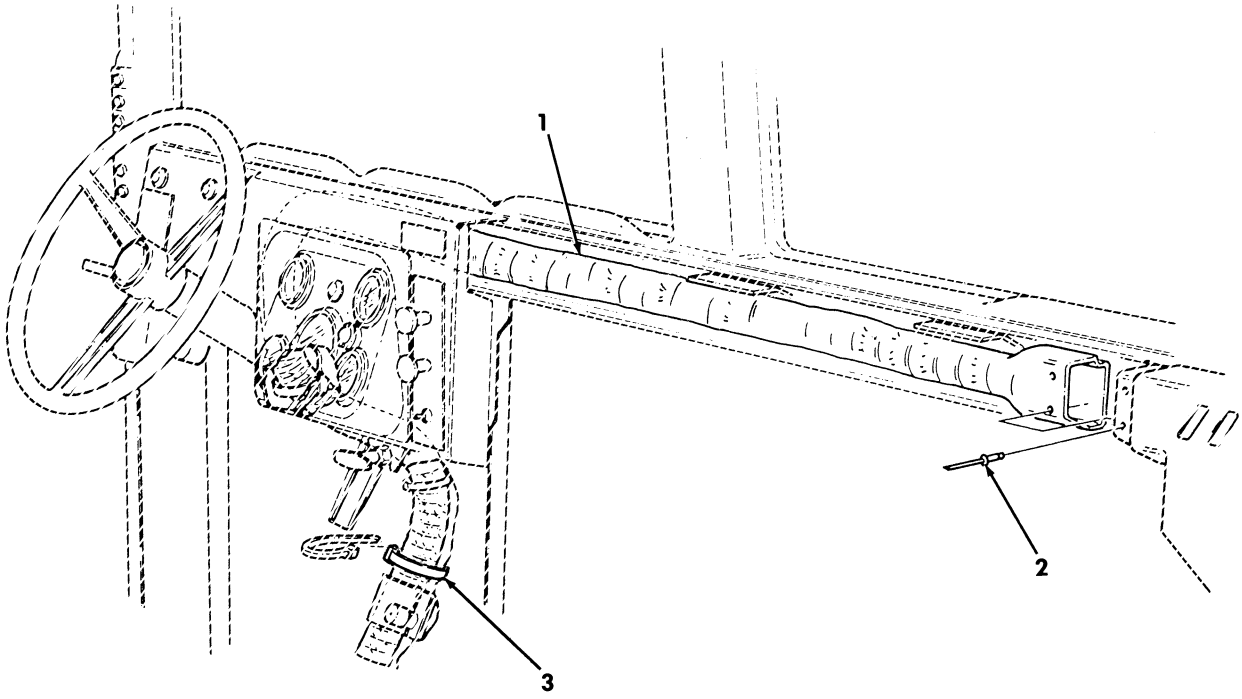

Figure 371. Arctic Kit, Heater Duct Assembly.

(1) ITEM NO	(2) SMR CODE	(3) NSN	(4) CAGEC	(5) PART NUMBER	(6) DESCRIPTION AND USABLE ON CODES(UOC)	(7) QTY
					GROUP 3303 WINTERIZATION KITS	
					FIG. 371 ARCTIC KIT,HEATER DUCT ASSEMBLY	
1	PAOZZ		19207	12447054	DUCT ASSEMBLY PART OF KIT P/N 5705698..... UOC:AVY,A11,A13,A14,A15,A20,A24,A25, A26,A27,B16,B17,B18,HVY,H11,H13,H14, H15,H16,H17,H18,H20,H21,H24,H25,H26, H27,H28,MMM	1
2	PAOZZ	5320010195694	81349	M24243/1A402	RIVET,BLIND PART OF KIT P/N 5705698 UOC:AVY,A11,A13,A14,A15,A20,A24,A25, A26,A27,B16,B17,B18,HVY,H11,H13,H14, H15,H16,H17,H18,H20,H21,H24,H25,H26, H27,H28,MMM	2
3	PAOZZ	5975010345871	96906	MS3367-7-0	STRAP,TIEDOWN,ELECT PART OF KIT P/N 5705698..... UOC:AVY,A11,A13,A14,A15,A20,A24,A25, A26,A27,B16,B17,B18,HVY,H11,H13,H14, H15,H16,H17,H18,H20,H21,H24,H25,H26, H27,H28,MMM	3

END OF FIGURE

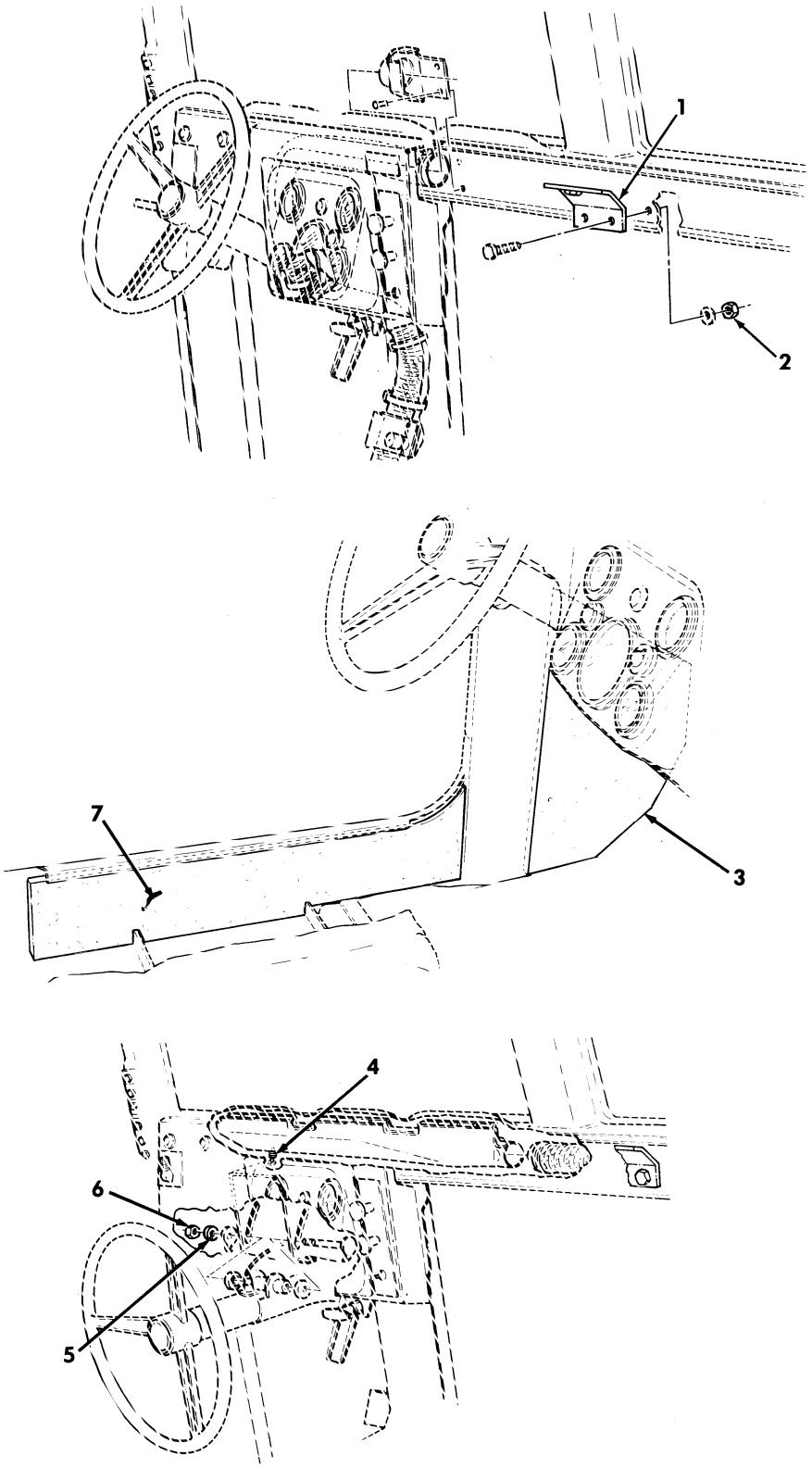

Figure 372. Arctic Kit, Diverter Box, Ducting, Insulation, and Radio Mounting Brackets.

(1) ITEM NO	(2) SMR CODE	(3) NSN	(4) CAGEC	(5) PART NUMBER	(6) DESCRIPTION AND USABLE ON CODES(UOC)	(7) QTY
					GROUP 3303 WINTERIZATION KITS	
					FIG. 372 ARCTIC KIT,DIVERTER BOX, DUCTING,INSULATION,AND RADIO MOUNTING BRACKETS	
1	PFOZZ	5340014764374	19207	12446765	BRACKET,DOUBLE ANGL..... UOC:AVY,A11,A13,A14,A15,A20,A24,A25, A26,A27,B16,B17,B18,HVY,H11,H13,H14, H15,H16,H17,H18,H20,H21,H24,H25,H26, H27,H28,MMM	1
2	PAOZZ	5310014326727	24617	9419471	NUT,SELF-LOCKING,HE PART OF KIT P/N 5705698..... UOC:AVY,A11,A13,A14,A15,A20,A24,A25, A26,A27,B16,B17,B18,HVY,H11,H13,H14, H15,H16,H17,H18,H20,H21,H24,H25,H26, H27,H28,MMM	4
3	PAOZZ	2540013953979	9C234	12342755-2	INSULATION,THERMAL PART OF KIT P/N 5705698..... UOC:AVY,A11,A13,A14,A15,A20,A24,A25, A26,A27,B16,B17,B18,HVY,H11,H13,H14, H15,H16,H17,H18,H20,H21,H24,H25,H26, H27,H28,MMM	1
4	PAOZZ	5325012097843	19207	12339402	GROMMET,NONMETALLIC PART OF KIT P/N 5705698..... UOC:AVY,A11,A13,A14,A15,A20,A24,A25, A26,A27,B16,B17,B18,HVY,H11,H13,H14, H15,H16,H17,H18,H20,H21,H24,H25,H26, H27,H28,MMM	1
5	PAOZZ	5310006379541	96906	MS35338-46	WASHER,LOCK 3/8 PART OF KIT P/N 5705698..... UOC:AVY,A11,A13,A14,A15,A20,A24,A25, A26,A27,B16,B17,B18,HVY,H11,H13,H14, H15,H16,H17,H18,H20,H21,H24,H25,H26, H27,H28,MMM	1
6	PAOZZ	5310009359021	96906	MS51943-35	NUT,SELF-LOCKING,HE PART OF KIT P/N 5705698..... UOC:AVY,A11,A13,A14,A15,A20,A24,A25, A26,A27,B16,B17,B18,HVY,H11,H13,H14, H15,H16,H17,H18,H20,H21,H24,H25,H26, H27,H28,MMM	1
7	PAOZZ	2540013952230	9C234	12342756	INSULATION,THERMAL PART OF KIT P/N 5705698..... UOC:AVY,A11,A13,A14,A15,A20,A24,A25, A26,A27,B16,B17,B18,HVY,H11,H13,H14, H15,H16,H17,H18,H20,H21,H24,H25,H26, H27,H28,MMM	1
KIT	PDFZZ	2540013170728	34623	5705698	PARTS KIT,VEHICULAR..... UOC:AVY,A11,A13,A14,A15,A20,A24,A25, A26,A27,B16,B17,B18,HVY,H11,H13,H14, H15,H16,H17,H18,H20,H21,H24,H25,H26, H27,H28,MMM	1
					ADAPTER,CONNECTOR (1) 366-31	

(1) ITEM NO	(2) SMR CODE	(3) NSN	(4) CAGEC	(5) PART NUMBER	(6) DESCRIPTION AND USABLE ON CODES(UOC)	(7) QTY
					ADAPTER,CONNECTOR (1) 366-32	
					ADAPTER,STRAIGHT,PI(1) 366-12	
					ADAPTER,STRAIGHT,PI(1) 366-14	
					ADAPTER,STRAIGHT,PI(1) 366-24	
					ADAPTER,STRAIGHT,PI(1) 368-37	
					ANCHOR,STRAP (1) 365-19	
					ARCTIC COVER,DIVERT(1) 370-9	
					BEZEL,AUTOMOTIVE TR(1) 368-33	
					BRACKET,DOUBLE ANGL(1) 366-27	
					BRACKET,DOUBLE ANGL(1) 369-11	
					BRACKET,DOUBLE ANGL(2) 370-28	
					BRACKET,MOUNTING (2) 368-21	
					BUTTON,PLUG (1) 370-5	
					CABLE,CONTROL (1) 368-41	
					CAP,FILLER,OPENING (1) 366-1	
					CAP,PROTECTIVE (2) 370-23	
					CAP,TUBE (1) 366-15	
					CLAMP,HOSE (2) 364-3	
					CLAMP,HOSE (2) 365-10	
					CLAMP,HOSE (2) 366-21	
					CLAMP,HOSE (3) 368-3	
					CLAMP,HOSE (2) 368-14	
					CLAMP,HOSE (2) 368-20	
					CLAMP,HOSE (2) 368-38	
					CLAMP,LOOP (1) 365-21	
					CLAMP,LOOP (1) 366-5	
					CLAMP,LOOP (1) 366-7	
					CLAMP,LOOP (1) 366-20	
					CLAMP,LOOP (1) 366-28	
					CLAMP,LOOP (1) 368-42	
					CLAMP,LOOP (1) 370-18	
					CONNECTOR,EXHAUST P(1) 365-11	
					CONNECTOR,EXHAUST P(1) 368-13	
					CONNECTOR,EXHAUST P(1) 368-17	
					CONTROL BOX,ELECTRI(1) 366-2	
					COUPLING,PIPE (1) 366-10	
					COVER ACCESS (1) 370-22	
					COVER,ASSEMBLY,COWL(1) 368-4	
					DOOR ASSEMBLY,BATTE(1) 369-5	
					DIVERTER ASSEMBLY (1) 365-6	
					DUCT ASSEMBLY (1) 371-1	
					DUMMY CONNECTOR,PLU(1) 366-34	
					ELBOW,PIPE TO TUBE (2) 366-9	
					ELBOW,PIPE TO TUBE (1) 368-29	
					FILTER,FLUID (1) 368-30	
					FLANGE,PIPE (1) 368-15	
					GASKET,AIR HORN (1) 364-2	
					GROMMET,NONMETALLIC(1) 368-10	
					GROMMET,NONMETALLIC(2) 369-4	
					GROMMET,NONMETALLIC(1) 372-4	
					GUARD,FUEL FILTER (1) 368-35	
					HEATER,VEHICULAR,CO(1) 368-19	
					HOSE,AIR DUCT (1) 368-44	

(1) ITEM NO	(2) SMR CODE	(3) NSN	(4) CAGEC	(5) PART NUMBER	(6) DESCRIPTION AND USABLE ON CODES(UOC)	(7) QTY
					HOSE,AIR DUCT (1) 368-46	
					HOSE,AIR DUCT (1) 370-2	
					HOSE,AIR DUCT (1) 370-4	
					HOSE,AIR DUCT (1) 370-7	
					HOSE,AIR DUCT (1) 370-8	
					HOSE,NONMETALLIC (2) 364-4	
					HOSE,NONMETALLIC (1) 366-22	
					HOSE,NONMETALLIC (1) 368-39	
					HOSE,PREFORMED (1) 364-9	
					HOUSING,CENTRIFUGAL(1) 368-6	
					INSULATION (1) 372 3	
					INSULATION,BLANKET (1) 368-31	
					INSULATION,THERMAL (1) 372-7	
					INSULATION,TUNNEL (1) 369-14	
					INSULATION,TUNNEL (1) 369-14	
					LEAD,ELECTRICAL (1) 366-29	
					MARKER,IDENTIFICATI(1) 370-15	
					NUT,PLAIN,HEXAGON (2) 370-24	
					NUT,SELF-LOCKING,HE(2) 368-36	
					NUT,SELF-LOCKING,HE(1) 364-7	
					NUT,SELF-LOCKING,HE(10) 365-18	
					NUT,SELF-LOCKING,HE(1) 365-22	
					NUT,SELF-LOCKING,HE(2) 366-30	
					NUT,SELF-LOCKING,HE(4) 368-18	
					NUT,SELF-LOCKING,HE(9) 368-32	
					NUT,SELF-LOCKING,HE(2) 368-36	
					NUT,SELF-LOCKING,HE(4) 369-10	
					NUT,SELF-LOCKING,HE(4) 372-2	
					NUT,SELF-LOCKING,HE(1) 372-6	
					PIN,COTTER (4) 365-8	
					PIN,COTTER (3) 368-12	
					PIN,COTTER (1) 368-8	
					PIPE,EXHAUST (1) 365-7	
					PIPE,EXHAUST (1) 365-9	
					PIPE,EXHAUST (1) 365-12	
					PLATE,IDENTIFICATIO(1) 370-20	
					PLATE,INSTRUCTION (1) 370-12	
					PLATE,INSTRUCTION (1) 370-13	
					PLATE,INSTRUCTION (1) 370-19	
					PLATE,MOUNTING (1) 369-9	
					PLUG,EXPANSION (3) 369-3	
					PUMP,FUEL,ELECTRICA(1) 366-25	
					REGULATOR,AIR DUCT (1) 368-2	
					RETAINER,INTERIOR I(1) 369-13	
					RETAINER,INTERIOR I(1) 369-13	
					RIVET,BLIND (2) 365-1	
					RIVET,BLIND (4) 365-14	
					RIVET,BLIND (4) 365-26	
					RIVET,BLIND (8) 368-5	
					RIVET,BLIND (2) 369-7	
					RIVET,BLIND (4) 369-8	
					RIVET,BLIND (2) 369-15	
					RIVET,BLIND (4) 370-11	

(1) ITEM NO	(2) SMR CODE	(3) NSN	(4) CAGEC	(5) PART NUMBER	(6) DESCRIPTION AND USABLE ON CODES(UOC)	(7) QTY
					RIVET,BLIND (4) 370-21	
					RIVET,BLIND (2) 371-3	
					SCREW,CAP,HEXAGON H(2) 365-4	
					SCREW,CAP,HEXAGON H(1) 365-13	
					SCREW,CAP,HEXAGON H(2) 366-17	
					SCREW,CAP,HEXAGON H(4) 368-24	
					SCREW,CAP,HEXAGON H(8) 368-34	
					SCREW,CAP,HEXAGON H(1) 368-40	
					SCREW,CAP,HEXAGON H(1) 370-16	
					SCREW,CAP,HEXAGON H(2) 370-26	
					SCREW,MACHINE (1) 365-20	
					SCREW,MACHINE (1) 368-7	
					SCREW,MACHINE (2) 368-27	
					SCREW,TAPPING (2) 366-3	
					SCREW,TAPPING (2) 366-6	
					SEAL,NONMETALLIC (1) 368-1	
					SETSCREW (1) 368-9	
					SHELL,ELECTRICAL CO(1) 366-33	
					SHIELD,HEATER DUCT (1) 368-11	
					SHROUD,ARTIC (1) 365-23	
					SPACER,PLATE (1) 368-25	
					SPACER,PLATE (1) 369-6	
					SPACER,SLEEVE (1) 370-14	
					STRAP,TIEDOWN,ELECT(1) 369-2	
					STRAP,TIEDOWN,ELECT(3) 371-3	
					STUD,SHOULDERED (7) 365-17	
					TEE,PIPE (1) 366-13	
					TEMPLATE (1) 365-2	
					TEMPLATE (2) 365-3	
					TEMPLATE (1) 365-15	
					TEMPLATE (1) 366-8	
					TEMPLATE (1) 366-35	
					TEMPLATE (1) 366-36	
					TEMPLATE (1) 368-43	
					TEMPLATE,FUEL PUMP (1) 366-37	
					THERMASEAL,HEATER (1) 368-16	
					TUBE ASSEMBLY (1) 366-11	
					TUBE ASSEMBLY,METAL(1) 364-5	
					TUBE ASSEMBLY,METAL(1) 366-15	
					TUBE ASSEMBLY,METAL(1) 366-18	
					TUBE ASSEMBLY,METAL(1) 366-19	
					TUBE ASSEMBLY,METAL(1) 366-23	
					TUBE ASSEMBLY,METAL(1) 368-28	
					TUBE,BENT,METALLIC (1) 364-8	
					VENTILATOR,AIR CIRC(1) 370-1	
					VENTILATOR,AIR CIRC(1) 370-3	
					VENTILATOR,AIR CIRC(1) 370-6	
					WASHER,FLAT (2) 364-1	
					WASHER,FLAT (10) 365-16	
					WASHER,FLAT (4) 366-16	
					WASHER,FLAT (22) 368-22	
					WASHER,FLAT (2) 368-26	
					WASHER,FLAT (1) 370-10	

(1) ITEM NO	(2) SMR CODE	(3) NSN	(4) CAGEC	(5) PART NUMBER	(6) DESCRIPTION AND USABLE ON CODES(UOC)	(7) QTY
					WASHER,FLAT (2) 370-25	
					WASHER,FLAT (2) 370-27	
					WASHER,LOCK (1) 364-6	
					WASHER,LOCK (2) 365-5	
					WASHER,LOCK (2) 366-4	
					WASHER,LOCK (4) 368-23	
					WASHER,LOCK (2) 369-1	
					WASHER,LOCK (1) 370-17	
					WASHER,LOCK (1) 372-5	

END OF FIGURE

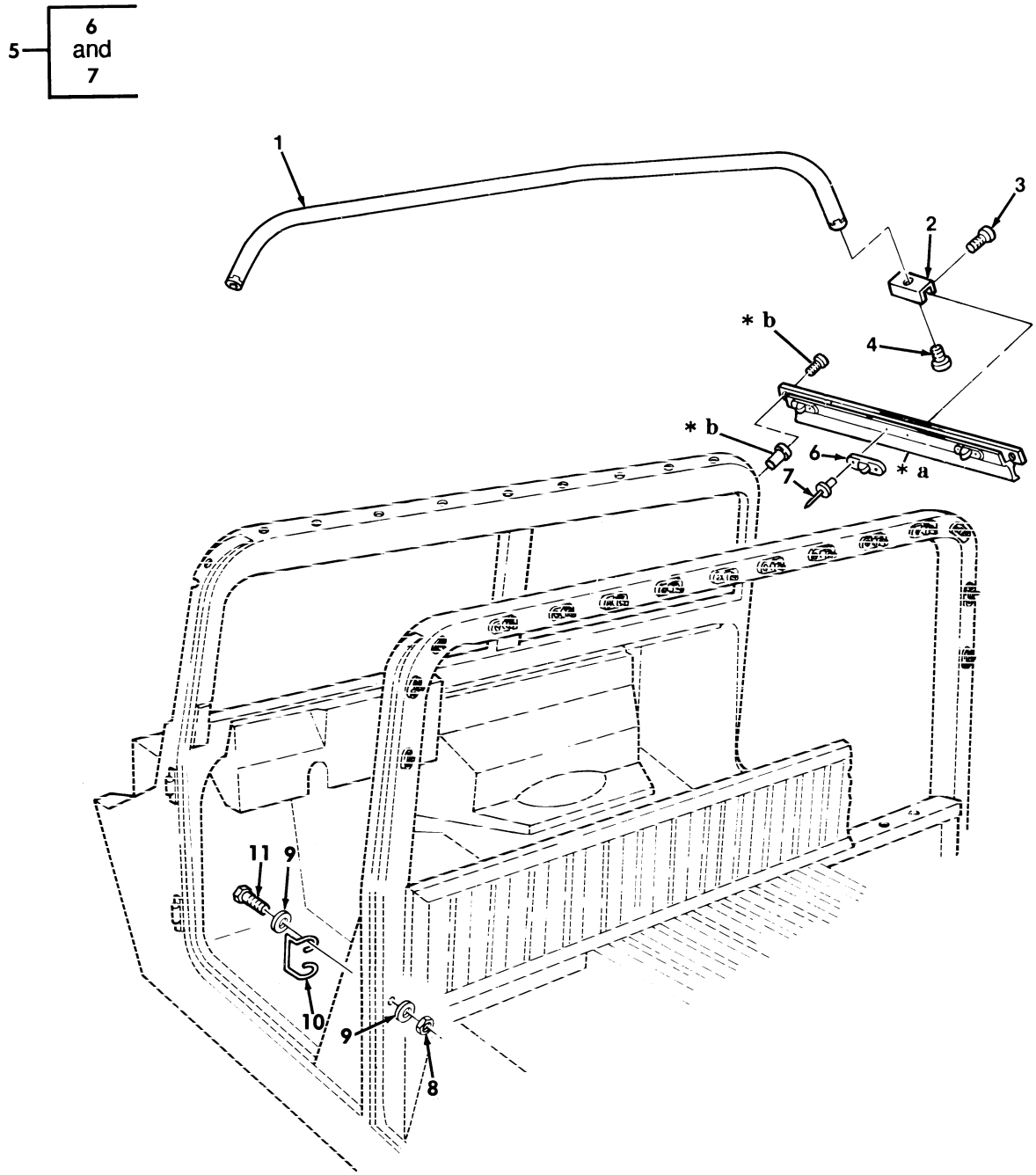

* a PART OF ITEM 5
* b SEE FIGURE 225

Figure 373. Arctic Kit, Two Man Crew, Bow, and Mounting Components.

(1) ITEM NO	(2) SMR CODE	(3) NSN	(4) CAGEC	(5) PART NUMBER	(6) DESCRIPTION AND USABLE ON CODES(UOC)	(7) QTY
					GROUP 3303 WINTERIZATION KITS	
					FIG. 373 ARCTIC KIT,TWO MAN CREW,BOW, AND MOUNTING COMPONENTS	
1	PAOZZ	2540012064115	19207	12340713	BOW,VEHICULAR TOP PART OF KIT P/N 57K0137..... UOC:AVY,A13,A14,BVY,HVY,H13,H14,H21, H28,NNN	1
2	PAOZZ	5340012043862	19207	12340239	STRAP,RETAINING PART OF KIT P/N 57K0137..... UOC:AVY,A13,A14,BVY,HVY,H13,H14,H21, H28,NNN	4
3	PAOZZ	5305000593659	96906	MS51958-63	SCREW,MACHINE #10-32 X 1/2 PART OF KIT P/N 57K0137..... UOC:AVY,A13,A14,BVY,HVY,H13,H14,H21, H28,NNN	4
4	PAOZZ	5305000711313	96906	MS51957-77	SCREW,MACHINE 1/4-20 X 3/8 PART OF KIT P/N 57K0137..... UOC:AVY,A13,A14,BVY,HVY,H13,H14,H21, H28,NNN	2
5	PAOZZ	2590011982895	19207	12340603-1	RAIL ASSEMBLY,HAND L.H. PART OF KIT P/N 57K0137..... UOC:AVY,A13,A14,BVY,HVY,H13,H14,H21, H28,NNN	1
5	PAOZZ	2590011974898	19207	12340603-2	RAIL ASSEMBLY,HAND R.H. PART OF KIT P/N 57K0137..... UOC:AVY,A13,A14,BVY,HVY,H13,H14,H21, H28,NNN	1
6	PAOZZ	5325008235999	13940	XB78323-05001	.STUD,TURNBUTTON FAS PART OF KIT P/N 57K0137..... UOC:AVY,A13,A14,BVY,HVY,H13,H14,H21, H28,NNN	3
7	PAOZZ	5320000835009	81349	M24243/1-A403	.RIVET,BLIND 1/8 DIA.,.126-.187 GRIP PART OF KIT P/N 57K0137..... UOC:AVY,A13,A14,BVY,HVY,H13,H14,H21, H28,NNN	6
8	PAOZZ	5310002416658	96906	MS51943-34	NUT,SELF-LOCKING,HE 5/16-24 PART OF KIT P/N 57K0137..... UOC:AVY,A13,A14,BVY,HVY,H13,H14,H21, H28,NNN	4
9	PAOZZ	5310004079566	96906	MS35338-45	WASHER,LOCK 5/16 PART OF KIT P/N 57K0137..... UOC:AVY,A13,A14,BVY,HVY,H13,H14,H21, H28,NNN	4
10	PAOZZ	5340012070717	19207	12339187	BUCKLE PART OF KIT P/N 57K0137..... UOC:AVY,A13,A14,BVY,HVY,H13,H14,H21, H28,NNN	2
11	PAOZZ	5306001822027	19207	7346712	BOLT,MACHINE 5/16-24 PART OF KIT P/N 57K0137..... UOC:AVY,A13,A14,BVY,HVY,H13,H14,H21, H28,NNN	4

END OF FIGURE

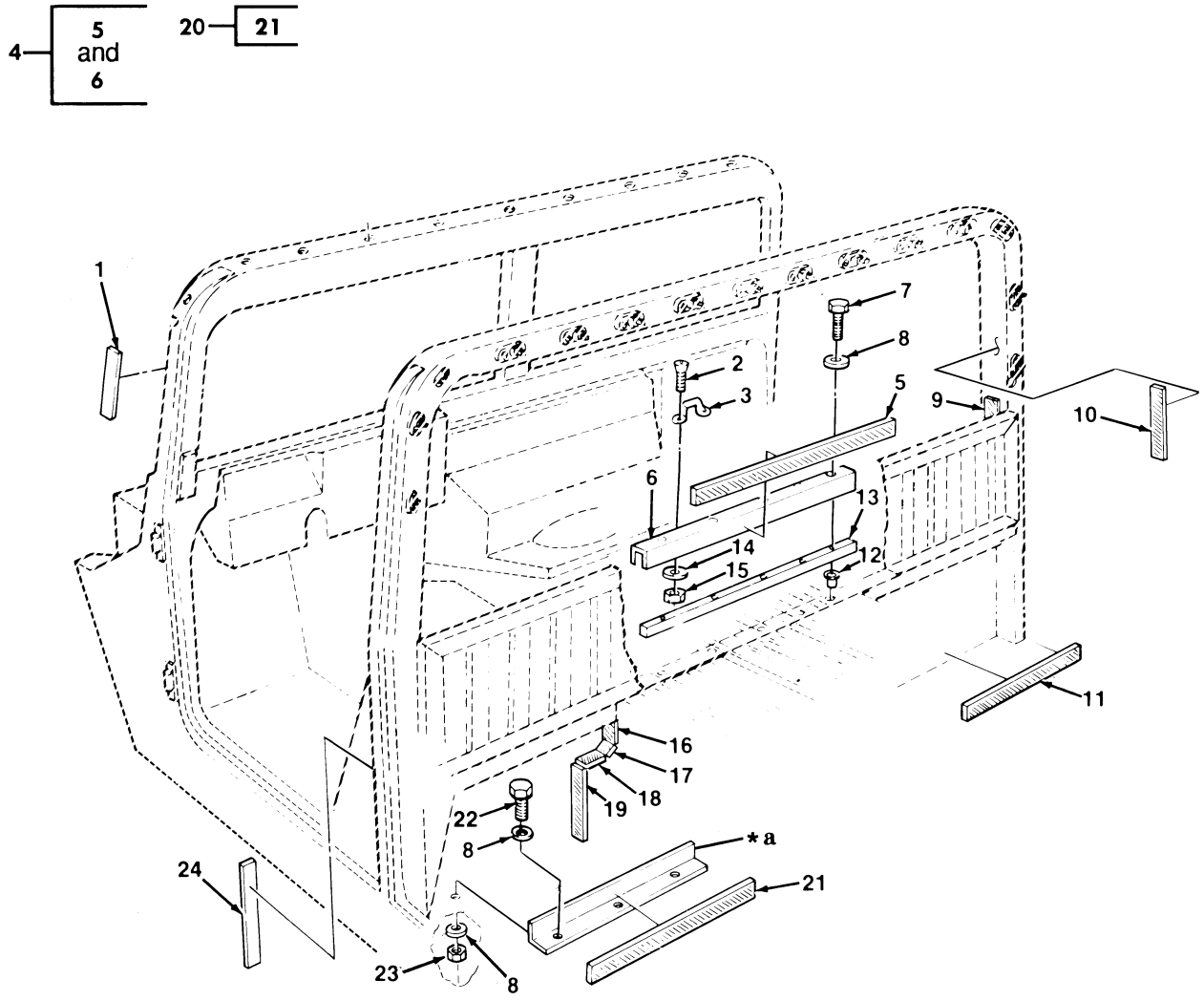

* a PART OF ITEM 20

Figure 374. Arctic Kit, Two Man Crew Curtain Fasteners.

(1) ITEM NO	(2) SMR CODE	(3) NSN	(4) CAGEC	(5) PART NUMBER	(6) DESCRIPTION AND USABLE ON CODES(UOC)	(7) QTY
					GROUP 3303 WINTERIZATION KITS	
					FIG. 374 ARCTIC KIT,TWO MAN CREW CURTAIN FASTENERS	
1	MOOZZ		34623	5589275	INSULATION,FOAM MAKE FROM PLASTIC STRIP,P/N 5741221,12 INCHES LONG PART OF KIT P/N 57K0137..... UOC:AVY,A13,A14,BVY,HVY,H13,H14,H21, H28,NNN	2
2	PAOZZ	5305000888332	96906	MS35190-272	SCREW,MACHINE #10-24 X 5/8 PART OF KIT P/N 57K0137..... UOC:AVY,A13,A14,BVY,HVY,H13,H14,H21, H28,NNN	4
3	PAOZZ	5340004895684	19220	6411-B	LOOP,STRAP FASTENER RART OF KIT P/N 57K0137..... UOC:AVY,A13,A14,BVY,HVY,H13,H14,H21, H28,NNN	2
4	PFOZA	5340014665243	19207	12340708	BRACKET,DOUBLE ANGL PART OF KIT P/N 57K0137..... UOC:AVY,A13,A14,BVY,HVY,H13,H14,H21, H28,NNN	1
5	MOOZZ		19207	12340700-12	.FASTENER,TAPE HOOK MAKE FROM FASTENER,TAPE,HOOK P/N 20197272, 31.75 INCHES..... UOC:AVY,A13,A14,BVY,HVY,H13,H14,H21, H28,NNN	1
6	XAOZZ		19207	12340708-1	.CHANNEL..... UOC:AVY,A13,A14,BVY,HVY,H13,H14,H21, H28,NNN	1
7	PAOZZ	5306012077487	7X677	9422042	BOLT,MACHINE 5/16-18 X 2.00 PART OF KIT P/N 57K0137..... UOC:AVY,A13,A14,BVY,HVY,H13,H14,H21, H28,NNN	4
8	PAOZZ	5310011191024	24617	2436162	WASHER,FLAT 5/16 PART OF KIT P/N 57K0137..... UOC:AVY,A13,A14,BVY,HVY,H13,H14,H21, H28,NNN	10
9	MOOZZ		19207	12340700-7	FASTENER,TAPE,HOOK MAKE FROM FASTENER,TAPE,HOOK P/N 20197272, 6.50 INCHES PART OF KIT P/N 57K0137. UOC:AVY,A13,A14,BVY,HVY,H13,H14,H21, H28,NNN	2
10	MOOZZ		19207	12340700-10	FASTENER,TAPE,HOOK MAKE FROM FASTENER,TAPE,HOOK P/N 20197272,24 INCHES PART OF KIT P/N 57K0137..... UOC:AVY,A13,A14,BVY,HVY,H13,H14,H21, H28,NNN	2
11	MOOZZ		19207	12340700-11	FASTENER,TAPE,HOOK MAKE FROM FASTENER,TAPE,HOOK P/N 20197272, 19.5 INCHES PART OF KIT P/N 57K0137. UOC:AVY,A13,A14,BVY,HVY,H13,H14,H21, H28,NNN	4

(1) ITEM NO	(2) SMR CODE	(3) NSN	(4) CAGEC	(5) PART NUMBER	(6) DESCRIPTION AND USABLE ON CODES(UOC)	(7) QTY
12	PAOZZ	5310009523567	03481	A31-125	NUT,PLAIN,BLIND RIV 5/16-18 PART OF KIT P/N 57K0137..... UOC:AVY,A13,A14,BVY,HVY,H13,H14,H21, H28,NNN	4
13	PAOZZ	9330011975458	19207	12340697	PLASTIC MATERIA,CE PART OF KIT P/N 57K0137..... UOC:AVY,A13,A14,BVY,HVY,H13,H14,H21, H28,NNN	1
14	PAOZZ	5310000145850	96906	MS27183-42	WASHER,FLAT #10 PART OF KIT P/N 57K0137..... UOC:AVY,A13,A14,BVY,HVY,H13,H14,H21, H28,NNN	4
15	PAOZZ	5310011870678	7X677	116000	NUT,PLAIN,HEXAGON #10-24 PART OF KIT P/N 57K0137..... UOC:AVY,A13,A14,A25,A26,A27,BVY,B15, B16,B17,B18,B20,NNN	4
16	MOOZZ		19207	12340700-6	FASTENER,TAPE,HOOK R.H.,MAKE FROM FASTENER,TAPE,HOOK,P/N 20197272, 6.38 IN PART OF KIT P/N 57K0137..... UOC:AVY,A13,A14,BVY,HVY,H13,H14,H21, H28,NNN	1
16	MOOZZ		19207	12340700-4	FASTENER,TAPE,HOOK L.H.,MAKE FROM FASTENER,TAPE,HOOK P/N 20197272, 5.31 IN PART OF KIT P/N 57K0137..... UOC:AVY,A13,A14,BVY,HVY,H13,H14,H21, H28,NNN	1
17	MOOZZ		19207	12340700-1	FASTENER,TAPE,HOOK MAKE FROM FASTENER,TAPE,HOOK P/N 20197272, 1.88 INCHES PART OF KIT P/N 57K0137. UOC:AVY,A13,A14,BVY,HVY,H13,H14,H21, H28,NNN	2
18	MOOZZ		19207	12340700-2	FASTENER,TAPE,HOOK R.H.,MAKE FROM FASTENER,TAPE,HOOK P/N 20197272,3.12 PART OF KIT P/N 57K0137..... UOC:AVY,A13,A14,BVY,HVY,H13,H14,H21, H28,NNN	1
18	MOOZZ		19207	12340700-3	FASTENER,TAPE,HOOK L.H.,MAKE FROM FASTENER,TAPE,HOOK P/N 20197272, 3.19 IN PART OF KIT P/N 57K0137..... UOC:AVY,A13,A14,BVY,HVY,H13,H14,H21, H28,NNN	1
19	MOOZZ		19207	12340700-9	FASTENER,TAPE,HOOK MAKE FROM FASTENER,TAPE,HOOK P/N 20197272,8.5 INCHES LONG PART OF KIT P/N 57K0137. UOC:AVY,A13,A14,BVY,HVY,H13,H14,H21, H28,NNN	2
20	PFOZZ	2540011975463	34623	5590630	BRACE,ARTIC CURTAI PART OF KIT P/N 57K0137..... UOC:AVY,A13,A14,BVY,HVY,H13,H14,H21, H28,NNN	1
21	MOOZZ		19207	12340700-8	.FASTENER,TAPE HOOK MAKE FROM FASTENER,TAPE,HOOK P/N 20197272,19 INCHES LONG.....	1

(1) ITEM NO	(2) SMR CODE	(3) NSN	(4) CAGEC	(5) PART NUMBER	(6) DESCRIPTION AND USABLE ON CODES(UOC)	(7) QTY
					UOC:AVY,A13,A14,BVY,HVY,H13,H14,H21, H28,NNN	
22	PAOZZ	5306002264828	80204	B1821BH031C113N	BOLT,MACHINE 5/16-18 X 1.125 PART OF KIT P/N 57K0137..... UOC:AVY,A13,A14,BVY,HVY,H13,H14,H21, H28,NNN	3
23	PAOZZ	5310012085252	34623	5590556	NUT,SELF-LOCKING,HE 5/16-18 PART OF KIT P/N 57K0137..... UOC:AVY,A13,A14,BVY,HVY,H13,H14,H21, H28,NNN	3
24	MOOZZ		19207	12340700-11	TAPE,FASTENER HOOK MAKE FROM FASTENER,TAPE,HOOK P/N 20197272 PART OF KIT P/N 57K0137..... UOC:AVY,A13,A14,BVY,HVY,H13,H14,H21, H28,NNN	2

END OF FIGURE

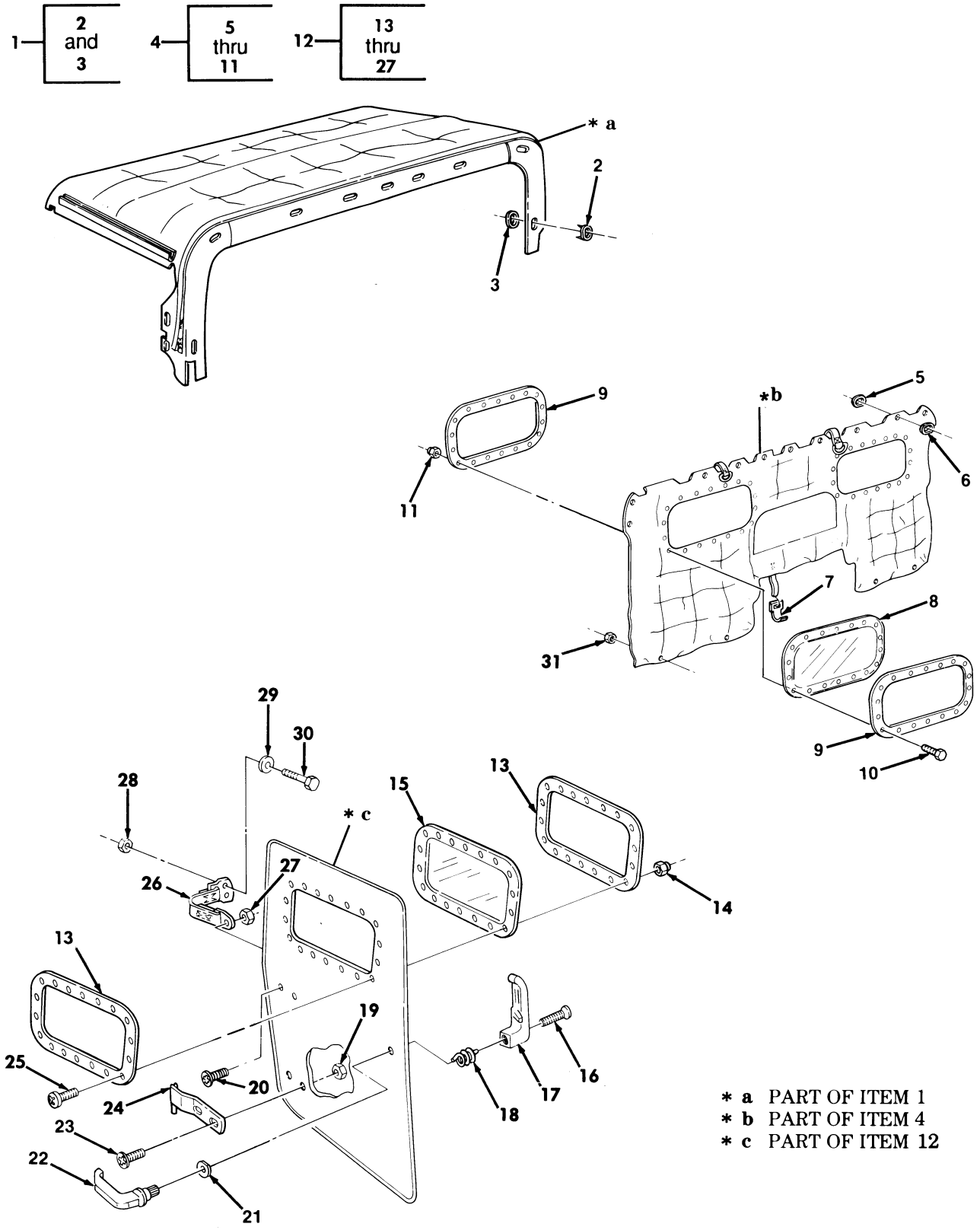

Figure 375. Arctic Kit, Two Man Crew, Top Curtain, Rear Curtain, and Door Assemblies.

(1) ITEM NO	(2) SMR CODE	(3) NSN	(4) CAGEC	(5) PART NUMBER	(6) DESCRIPTION AND USABLE ON CODES(UOC)	(7) QTY
					GROUP 3303 WINTERIZATION KITS	
					FIG. 375 ARCTIC KIT,TWO MAN CREW, TOP CURTAIN,REAR CURTAIN,AND DOOR ASSEMBLIES	
1	PAOFF	2540013958785	34623	12342441	COVER,FITTED,VEHICU PART OF KIT P/N 57K0137..... UOC:AVY,A13,A14,BVY,HVY,H13,H14,H21, H28,NNN	1
2	PAFZZ	5325006049662	21450	426686	.CLINCH PLATE,TURNBU..... UOC:AVY,A13,A14,BVY,HVY,H13,H14,H21, H28,NNN	8
3	PAFZZ	5325002818643	21450	426687	.SOCKET,TURNBUTTON F..... UOC:AVY,NNN	8
4	PAOFF	2540011975528	19207	12342442	CURTAIN,VEHICULAR PART OF KIT P/N 57K0137..... UOC:AVY,A13,A14,BVY,HVY,H13,H14,H21, H28,NNN	1
5	PAFZZ	5325006049662	21450	426686	.CLINCH PLATE,TURNBU..... UOC:AVY,A13,A14,BVY,HVY,H13,H14,H21, H28,NNN	12
6	PAFZZ	5325002818643	21450	426687	.SOCKET,TURNBUTTON F..... UOC:AVY,A13,A14,BVY,HVY,H13,H14,H21, H28,NNN	12
7	PAFZZ	5340012036542	31272	44702-10	.BUCKLE..... UOC:AVY,A13,A14,BVY,HVY,H13,H14,H21, H28,NNN	2
* 8	PAOZZ	2510013258741	19207	12340608	.WINDOW,VEHICULAR..... UOC:AVY,A13,A14,BVY,HVY,H13,H14,H21, H28,NNN	2
9	PFOZZ	5340011980686	19207	12340710	.PLATE,RETAINING,WIN..... UOC:AVY,A13,A14,BVY,HVY,H13,H14,H21, H28,NNN	4
10	PAOZZ	5305008132785	80205	NAS601-12P	.SCREW,MACHINE #8-32 X 3/4..... UOC:AVY,A13,A14,BVY,HVY,H13,H14,H21, H28,NNN	36
11	PAOZZ	5310010389579	24617	454748	.NUT,SELF-LOCKING,HE #8-32..... UOC:AVY,A13,A14,BVY,HVY,H13,H14,H21, H28,NNN	36
12	PAOOO	2510011975546	34623	SF5581723	DOOR,VEHICULAR FRONT,L.H. PART OF KIT P/N 57K0137..... UOC:AVY,A13,A14,BVY,HVY,H13,H14,H21, H28,NNN	1
12	PAOOO	2510011975547	34623	SF5581724	DOOR,VEHICULAR FRONT,R.H. PART OF KIT P/N 57K0137..... UOC:AVY,A13,A14,BVY,HVY,H13,H14,H21, H28,NNN	1
13	PFOZZ	5340011980686	19207	12340710	.PLATE,RETAINING,WIN..... UOC:AVY,A13,A14,BVY,HVY,H13,H14,H21, H28,NNN	2
14	PAOZZ	5310010389579	24617	454748	.NUT,SELF-LOCKING,HE #8-32..... UOC:AVY,A13,A14,BVY,HVY,H13,H14,H21,	18

(1) ITEM NO	(2) SMR CODE	(3) NSN	(4) CAGEC	(5) PART NUMBER	(6) DESCRIPTION AND USABLE ON CODES(UOC)	(7) QTY
					H28,NNN	
15	PFOZZ	2510013258741	19207	12340608	.WINDOW,VEHICULAR..... UOC:AVY,A13,A14,BVY,HVY,H13,H14,H21, H28,NNN	1
16	PAOZZ	5310000711327	96906	MS51960-70	.SCREW,MACHINE #10-32 X 1/4..... UOC:AVY,A13,A14,BVY,HVY,H13,H14,H21, H28,NNN	1
17	PAOZZ	2540012037721	19207	12301363-2	.HANDLE,DOOR,VEHICUL INSIDE,R.H. PART OF KIT P/N 5705619..... UOC:AVY,A13,A14,BVY,HVY,H13,H14,H21, H28,NNN	1
17	PAOZZ	2540012001994	19207	12301363-1	.HANDLE,DOOR,VEHICUL INSIDE,L.H. PART OF KIT P/N 5705618..... UOC:AVY,A13,A14,BVY,HVY,H13,H14,H21, H28,NNN	1
18	PAOZZ	5360013157212	19207	12356764-1	.SPRING,HELICAL,TORS L.H. PART OF KIT P/N 5705619..... UOC:AVY,A13,A14,BVY,HVY,H13,H14,H21, H28,NNN	1
18	PAOZZ	5360013157211	19207	12356764-2	.SPRING,HELICAL,TORS R.H. PART OF KIT P/N 5705618 PART OF KIT P/N 5705619..... UOC:AVY,A13,A14,BVY,HVY,H13,H14,H21, H28,NNN	1
19	PAOZZ	5310009971888	96906	MS35649-2252	.NUT,PLAIN,HEXAGON 1/4-20..... UOC:AVY,A13,A14,BVY,HVY,H13,H14,H21, H28,NNN	3
20	PAOZZ	5305012067217	16941	PL25D040P8	.SCREW,CAP,SOCKET HE 1/4-20 X 3/4.. UOC:AVY,A13,A14,BVY,HVY,H13,H14,H21, H28,NNN	1
21	PAOZZ	5310012059056	34623	5581321	.WASHER,FLAT PART OF KIT P/N 5705618 PART OF KIT P/N 5705619.... UOC:AVY,A13,A14,BVY,HVY,H13,H14,H21, H28,NNN	1
22	PAOZZ	2540012001995	19207	12301365	.HANDLE,DOOR,VEHICUL OUTSIDE,L.H., R.H. PART OF KIT P/N 5705618 PART OF KIT P/N 5705619..... UOC:AVY,A13,A14,BVY,HVY,H13,H14,H21, H28,NNN	1
23	PAOZZ	5305000711315	96906	MS51957-79	.SCREW,MACHINE 1/4-20 X 1/2..... UOC:AVY,A13,A14,BVY,HVY,H13,H14,H21, H28,NNN	3
24	PAOZZ	5340012059021	19207	12340193-1	.LEAF,BUTT HINGE L.H..... UOC:AVY,A13,A14,BVY,HVY,H13,H14,H21, H28,NNN	2
24	PAOZZ	5340012059022	19207	12340193-2	.LEAF,BUTT HINGE R.H..... UOC:AVY,A13,A14,BVY,HVY,H13,H14,H21, H28,NNN	2
25	PAOZZ	5305008132785	80205	NAS601-12P	.SCREW,MACHINE #8-32 X 3/4..... UOC:AVY,A13,A14,BVY,HVY,H13,H14,H21, H28,NNN	18
26	PAOZZ	5340011993510	31272	44877	.STRAP,WEBBING..... UOC:AVY,A13,A14,BVY,HVY,H13,H14,H21,	1

(1) ITEM NO	(2) SMR CODE	(3) NSN	(4) CAGEC	(5) PART NUMBER	(6) DESCRIPTION AND USABLE ON CODES(UOC)	(7) QTY
					H28,NNN	
27	PAOZZ	5310009971888	96906	MS35649-2252	.NUT,PLAIN,HEXAGON 1/4-20..... UOC:AVY,A13,A14,BVY,HVY,H13,H14,H21, H28,NNN	1
28	PAOZZ	5310000614650	96906	MS51943-31	NUT,SELF-LOCKING,HE 1/4-20 PART OF KIT P/N 57K0137..... UOC:AVY,A13,A14,BVY,HVY,H13,H14,H21, H28,NNN	2
29	PAOZZ	5310008094058	96906	MS27183-10	WASHER,FLAT 1/4..... UOC:AVY,A13,A14,BVY,HVY,H13,H14,H21, H28,NNN	2
30	PAOZZ	5305000712506	80204	B1821BH025C050N	SCREW,CAP,HEXAGON H 1/4-20 X 1/2... UOC:AVY,A13,A14,BVY,HVY,H13,H14,H21, H28,NNN	2
31	PAOZZ	5310008140673	96906	MS51943-33	NUT,SELF-LOCKING,HE 5/16-18 PART OF KIT P/N 57K0137..... UOC:AVY,A13,A14,BVY,HVY,H13,H14,H21, H28,NNN	4
KIT	PDFZZ	2540013944454	19207	57K0137	WINTERIZATION KIT,V..... UOC:AVY,A13,A14,BVY,HVY,H13,H18,H21, H28,NNN	1
					BOLT,MACHINE (4) 373-11	
					BOLT,MACHINE (4) 374-7	
					BOLT,MACHINE (3) 374-22	
					BOW,VEHICULAR TOP (1) 373-1	
					BRACE,ARCTIC CURTAI(1) 374-20	
					BRACKET,DOUBLE ANGL(1) 374-4	
					BUCKLE (2) 373-10	
					COVER,FITTED,VEHICU(1) 375-1	
					CURTAIN,VEHICULAR (1) 375-4	
					DOOR,VEHICULAR (1) 375-12	
					DOOR,VEHICULAR (1) 375-12	
					FASTENER,TAPE HOOK (2) 374-9	
					FASTENER,TAPE HOOK (2) 374-10	
					FASTENER,TAPE HOOK (4) 374-11	
					FASTENER,TAPE HOOK (1) 374-16	
					FASTENER,TAPE HOOK (1) 374-16	
					FASTENER,TAPE HOOK (2) 374-17	
					FASTENER,TAPE HOOK (1) 374-18	
					FASTENER,TAPE HOOK (1) 374-18	
					FASTENER,TAPE HOOK (2) 374-19	
					FASTENER,TAPE HOOK (2) 374-24	
					INSULATION,FOAM (2) 374-1	
					LOOP,STRAP FASTENER(2) 374-3	
					NUT,PLAIN,BLIND RIV(4) 374-12	
					NUT,PLAIN,HEXAGON (4) 374-15	
					NUT,SELF-LOCKING,HE(4) 373-8	
					NUT,SELF-LOCKING,HE(3) 374-23	
					NUT,SELF-LOCKING,HE(2) 375-28	
					NUT,SELF-LOCKING,HE(4) 375-31	
					PLASTIC,MATERIAL,CE(1) 374-13	
					RAIL ASSEMBLY,HAND (1) 373-5	
					RAIL ASSEMBLY,HAND (1) 373-5	

(1) ITEM NO	(2) SMR CODE	(3) NSN	(4) CAGEC	(5) PART NUMBER	(6) DESCRIPTION AND USABLE ON CODES(UOC)	(7) QTY
					RIVET,BLIND (6) 373-7	
					SCREW,MACHINE (4) 373-3	
					SCREW,MACHINE (2) 373-4	
					SCREW,MACHINE (4) 374-2	
					STRAP,RETAINING (4) 373-2	
					STUD,TURNBUTTON FAS(3) 373-6	
					WASHER,FLAT (10) 374-8	
					WASHER,FLAT (4) 374-14	
					WASHER,LOCK (8) 373-9	

END OF FIGURE

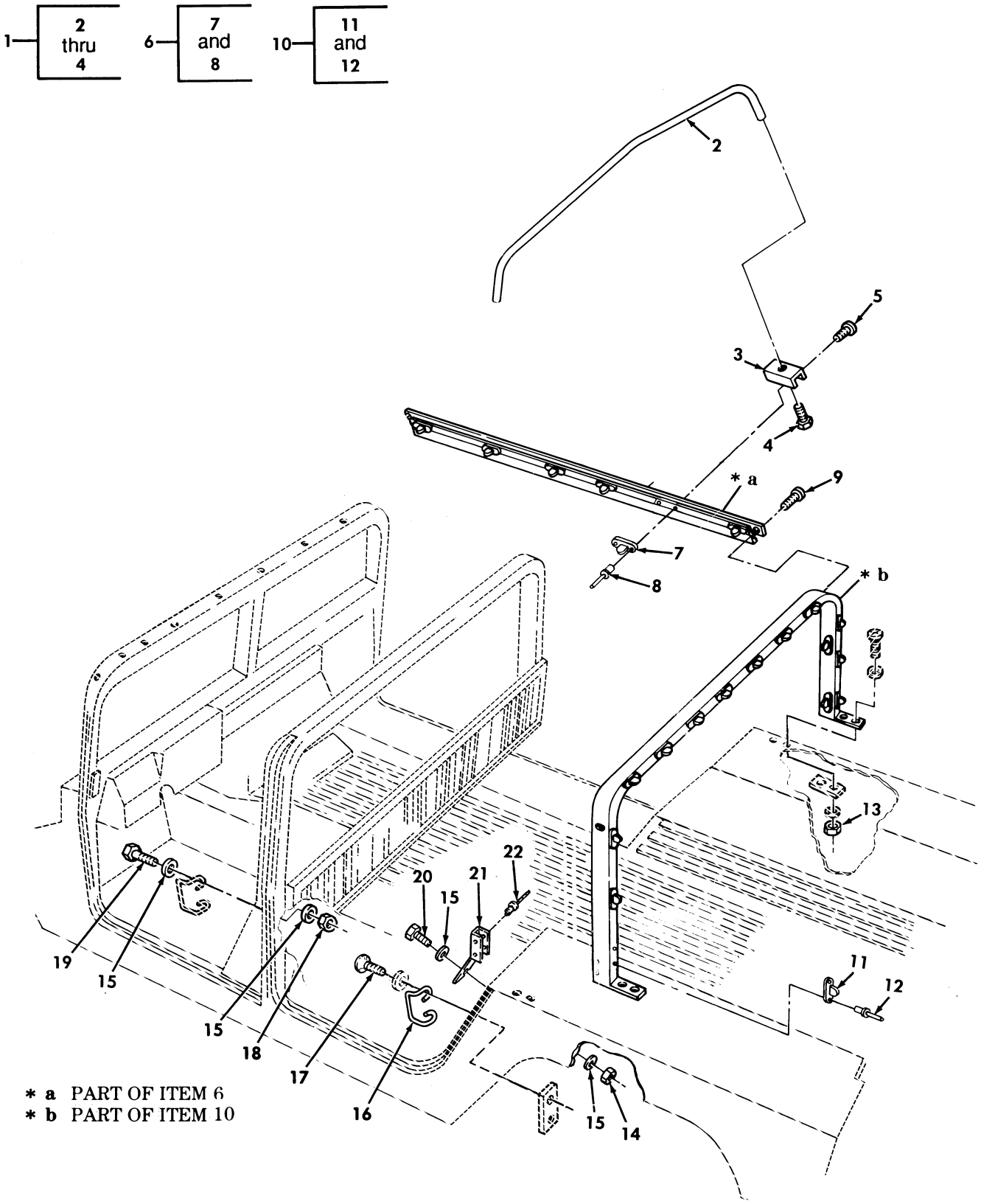

Figure 376. Arctic Kit, Four Man Crew, Top Enclosure, Bows, and Mounting Components.

(1) ITEM NO	(2) SMR CODE	(3) NSN	(4) CAGEC	(5) PART NUMBER	(6) DESCRIPTION AND USABLE ON CODES(UOC)	(7) QTY
					GROUP 3303 WINTERIZATION KITS	
					FIG. 376 ARCTIC KIT,FOUR MAN CREW, TOP ENCLOSURE,BOWS,AND MOUNTING COMPONENTS	
1	PFOZZ	2540011996759	19207	12340682	BOW,VEHICULAR TOP PART OF KIT P/N 5705692..... UOC:AVY,A13,A14,BVY,HVY,H13,H14,NNN	2
2	XAOZZ		19207	12340713	.BOW,VEHICULAR TOP..... UOC:AVY,A13,A14,BVY,HVY,H13,H14,NNN	1
3	PFOZZ	5340012043862	19207	12340239	.STRAP,RETAINING..... UOC:AVY,A13,A14,BVY,HVY,H13,H14,NNN	2
4	PAOZZ	5305000711313	96906	MS51957-77	.SCREW,MACHINE 1/4-20 X 3/8..... UOC:AVY,A13,A14,BVY,HVY,H13,H14,NNN	2
5	PAOZZ	5305000593659	96906	MS51958-63	SCREW,MACHINE #10-32 X 1/2 PART OF KIT P/N 5705692..... UOC:AVY,A13,A14,BVY,HVY,H13,H14,NNN	8
6	PFOZZ	2590011961290	19207	12340222-1	HANDRAIL,VEHICULAR L.H. PART OF KIT P/N 5705692..... UOC:AVY,A13,A14,BVY,HVY,H13,H14,NNN	1
6	PFOZZ	2590011965314	19207	12340222-2	HANDRAIL,VEHICULAR R.H. PART OF KIT P/N 5705692..... UOC:AVY,A13,A14,BVY,HVY,H13,H14,NNN	1
7	PAOZZ	5325008235999	13940	XB78323-05001	.STUD,TURNBUTTON FAS..... UOC:AVY,A13,A14,BVY,HVY,H13,H14,NNN	6
8	PAOZZ	5320000835009	81349	M24243/1-A403	.RIVET,BLIND 1/8 DIA,.126-.187 GRIP UOC:AVY,A13,A14,BVY,HVY,H13,H14,NNN	12
9	PAOZZ	5305011173396	80205	NAS-1635-3LE12	SCREW,CAP,SOCKET HE #10-32 X 1/2 PART OF KIT P/N 5705692..... UOC:AVY,A13,A14,BVY,HVY,H13,H14,NNN	2
10	PFOZZ	2540011961291	19207	12340679	BOW,VEHICULAR TOP PART OF KIT P/N 5705692..... UOC:AVY,A13,A14,BVY,HVY,H13,H14,NNN	1
11	PAOZZ	5325008235999	13940	XB78323-05001	.STUD,TURNBUTTON FAS..... UOC:AVY,A13,A14,BVY,HVY,H13,H14,NNN	17
12	PAOZZ	5320000835009	81349	M24243/1-A403	.RIVET,BLIND 1/8 DIA,.126-.187 GRIP UOC:AVY,A13,A14,BVY,HVY,H13,H14,NNN	34
13	PAOZZ	5310000614650	96906	MS51943-31	NUT,SELF-LOCKING,HE 1/4-20 PART OF KIT P/N 5705692..... UOC:AVY,A13,A14,BVY,HVY,H13,H14,NNN	4
14	PAOZZ	5310004838791	96906	MS17829-4F	NUT,SELF-LOCKING,HE #10-32 PART OF KIT P/N 5705692..... UOC:AVY,A13,A14,BVY,HVY,H13,H14,NNN	2
15	PAOZZ	5310000814219	96906	MS27183-12	WASHER,FLAT 5/16 PART OF KIT P/N 5705692..... UOC:AVY,A13,A14,BVY,HVY,H13,H14,NNN	12
16	PAOZZ	5340012087670	19207	12340182-1	STRIKE,CATCH REAR DOOR,L.H. PART OF KIT P/N 5705692..... UOC:AVY,A13,A14,BVY,HVY,H13,H14,NNN	1
16	PAOZZ	5342012049610	34623	5581364	STRIKER,LATCH,DOOR REAR DOOR,R.H. PART OF KIT P/N 5705692..... UOC:AVY,A13,A14,BVY,HVY,H13,H14,NNN	1

(1) ITEM NO	(2) SMR CODE	(3) NSN	(4) CAGEC	(5) PART NUMBER	(6) DESCRIPTION AND USABLE ON CODES(UOC)	(7) QTY
17	PAOZZ	5305009881727	96906	MS35206-283	SCREW,MACHINE 1/4-20 X 3/4 PART OF KIT P/N 5705692..... UOC:AVY,A13,A14,BVY,HVY,H13,H14,NNN	4
18	PAOZZ	5310002416658	96906	MS51943-34	NUT,SELF-LOCKING,HE 5/16-24 PART OF KIT P/N 5705692..... UOC:AVY,A13,A14,BVY,HVY,H13,H14,NNN	4
19	PAOZZ	5306001822027	88044	AN5H10A	BOLT,MACHINE PART OF KIT P/N 5705692 UOC:AVY,A13,A14,BVY,HVY,H13,H14,NNN	4
20	PAOZZ	5305009932457	96906	MS35207-284	SCREW,MACHINE 1/4-28 X 1-1/4 PART OF KIT P/N 5705692..... UOC:AVY,A13,A14,BVY,HVY,H13,H14,NNN	2
21	PAOZA	5340014309239	19207	12447124-1	BRACKET,MOUNTING C-PILLAR,RH PART OF KIT P/N 5705692..... UOC:AVY,A13,A14,BVY,HVY,H13,H14,NNN	1
21	PAOZA	5340014309240	19207	12447123-1	BRACKET,MOUNTING C-PILLAR,LH PART OF KIT P/N 5705692..... UOC:AVY,A13,A14,BVY,HVY,H13,H14,NNN	1
22	PAOZZ	5320010341884	11815	CR3243-6-5	RIVET,BLIND PART OF KIT P/N 5705692. UOC:AVY,A13,A14,BVY,HVY,H13,H14,NNN	8

END OF FIGURE

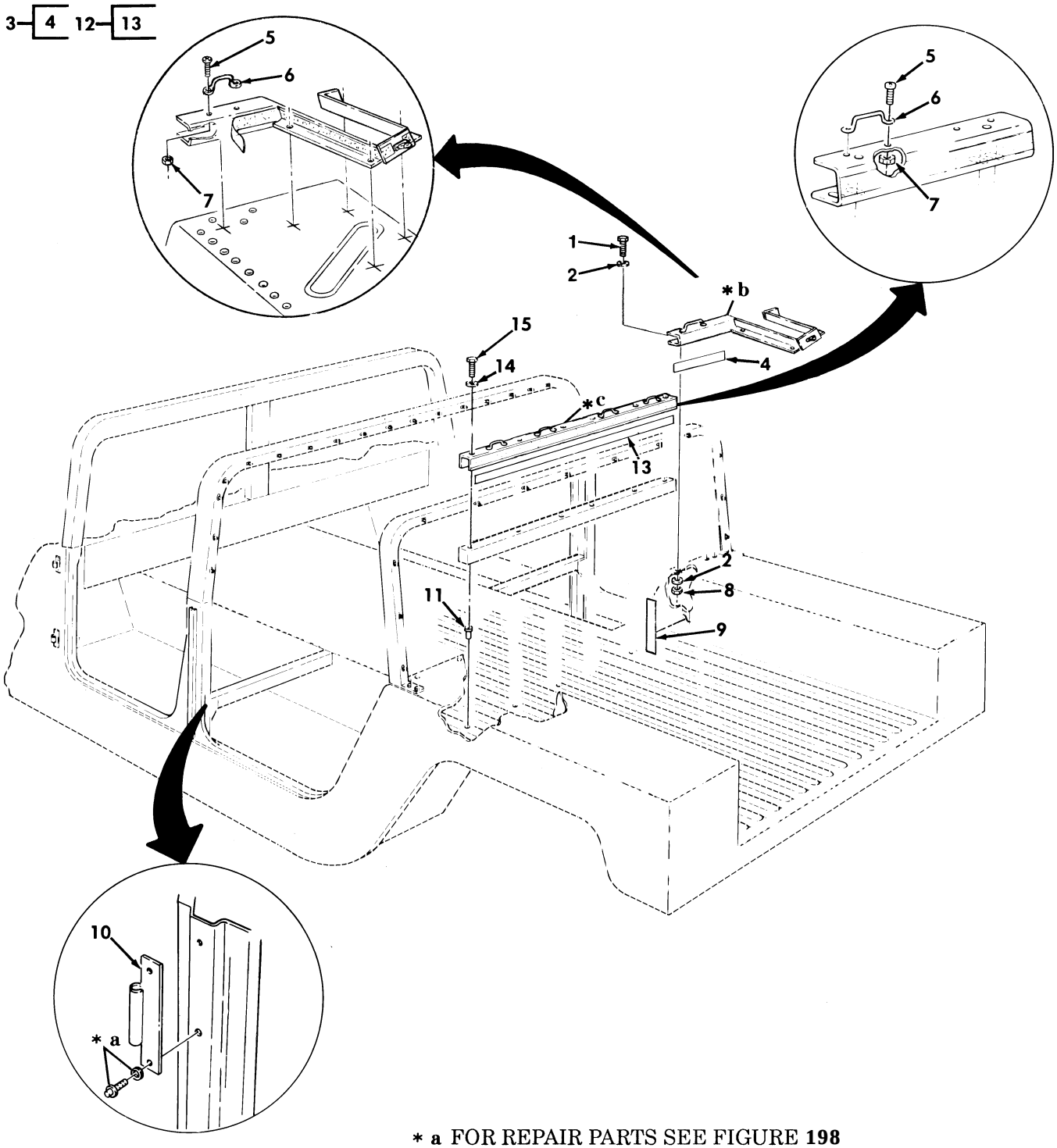

* a FOR REPAIR PARTS SEE FIGURE **198**
* b PART OF ITEM 3
* c PART OF ITEM 11

Figure 377. Arctic Kit, Door Hinges, and Curtain Channels.

(1) ITEM NO	(2) SMR CODE	(3) NSN	(4) CAGEC	(5) PART NUMBER	(6) DESCRIPTION AND USABLE ON CODES(UOC)	(7) QTY
					GROUP 3303 WINTERIZATION KITS	
					FIG. 377 ARCTIC KIT,DOOR HINGES,AND CURTAIN CHANNELS	
1	PAOZZ	5305000680502	96906	MS90725-6	SCREW,CAP,HEXAGON H 1/4-20 X 3/4 PART OF KIT P/N 5705692..... UOC:AVY,A13,A14,BVY,HVY,H13,H14,NNN	10
2	PAOZZ	5310011992293	7X677	9421394	WASHER,FLAT 1/4 PART OF KIT P/N 5705692..... UOC:AVY,A13,A14,BVY,HVY,H13,H14,NNN	20
3	PAOZZ	5340013968322	19207	12342496	BRACKET,MOUNTING R.H. PART OF KIT P/N 5705692..... UOC:AVY,A13,A14,BVY,HVY,H13,H14,NNN	1
3	PAOZZ	5340013850057	19207	12342495	BRACKET,MOUNTING L.H. PART OF KIT P/N 5705692..... UOC:AVY,A13,A14,BVY,HVY,H13,H14,NNN	1
4	MOOZZ		19207	12340700-14	.TAPE,FASTENER MAKE FROM FASTENER, TAPE,HOOK P/N 20197272,14 INCHES LONG..... UOC:AVY,A13,A14,BVY,HVY,H13,H14,NNN	2
5	PAOZZ	5305009847341	96906	MS35191-273	SCREW,MACHINE #10-32 X 5/8 PART OF KIT P/N 5705692..... UOC:AVY,A13,A14,BVY,HVY,H13,H14,NNN	12
6	PAOZZ	5340011978673	19207	12338839-4	HANDLE,BOW PART OF KIT P/N 5705692.. UOC:AVY,A13,A14,BVY,HVY,H13,H14,NNN	6
7	PAOZZ	5310001641790	72582	454749	NUT,SELF-LOCKING,HE #10-32 PART OF KIT P/N 5705692..... UOC:AVY,A13,A14,BVY,HVY,H13,H14,NNN	12
8	PAOZZ	5310014326727	24617	9419471	NUT,SELF-LOCKING,HE 1/4-20 PART OF KIT P/N 5705692..... UOC:AVY,A13,A14,BVY,HVY,H13,H14,NNN	10
9	MOOZZ		19207	12340700-16	TAPE,FASTENER HOOK MAKE FROM FASTENER,TAPE,HOOK P/N 20197272,16 INCHES LONG PART OF KIT P/N 5705692. UOC:AVY,A13,A14,BVY,HVY,H13,H14,NNN	2
10	PAOZZ	5342012032822	19207	12338650	MOUNT,RESILIENT PART OF KIT P/N 5705692..... UOC:AVY,A13,A14,BVY,HVY,H13,H14,NNN	4
11	PAOZZ	5310010851208	96906	MS27130-S71	NUT,PLAIN,BLIND RIV .030-.125 PART OF KIT P/N 5705692..... UOC:AVY,A13,A14,BVY,HVY,H13,H14,NNN	6
12	PAOZZ	2590013332999	80212	12342152	BEZEL,AUTOMOTIVE TR PART OF KIT P/N 5705692..... UOC:AVY,A13,A14,BVY,HVY,H13,H14,NNN	1
13	MOOZZ		19207	12340700-15	.TAPE,FASTENER MAKE FROM FASTENER, TAPE,HOOK P/N 20197272,15 INCHES LONG..... UOC:AVY,A13,A14,BVY,HVY,H13,H14,NNN	1
14	PAOZZ	5310000814219	96906	MS27183-12	WASHER,FLAT 11/32 PART OF KIT P/N 5705692..... UOC:AVY,A13,A14,BVY,HVY,H13,H14,NNN	6
15	PAOZZ	5306002264833	80204	B1821BH031C200N	BOLT,MACHINE 5/16-18 X 2.00 PART OF	6

(1) ITEM NO	(2) SMR CODE	(3) NSN	(4) CAGEC	(5) PART NUMBER	(6) DESCRIPTION AND USABLE ON CODES(UOC)	(7) QTY
					KIT P/N 5705692.....	
					UOC:AVY,A13,A14,BVY,HVY,H13,H14,NNN	

END OF FIGURE

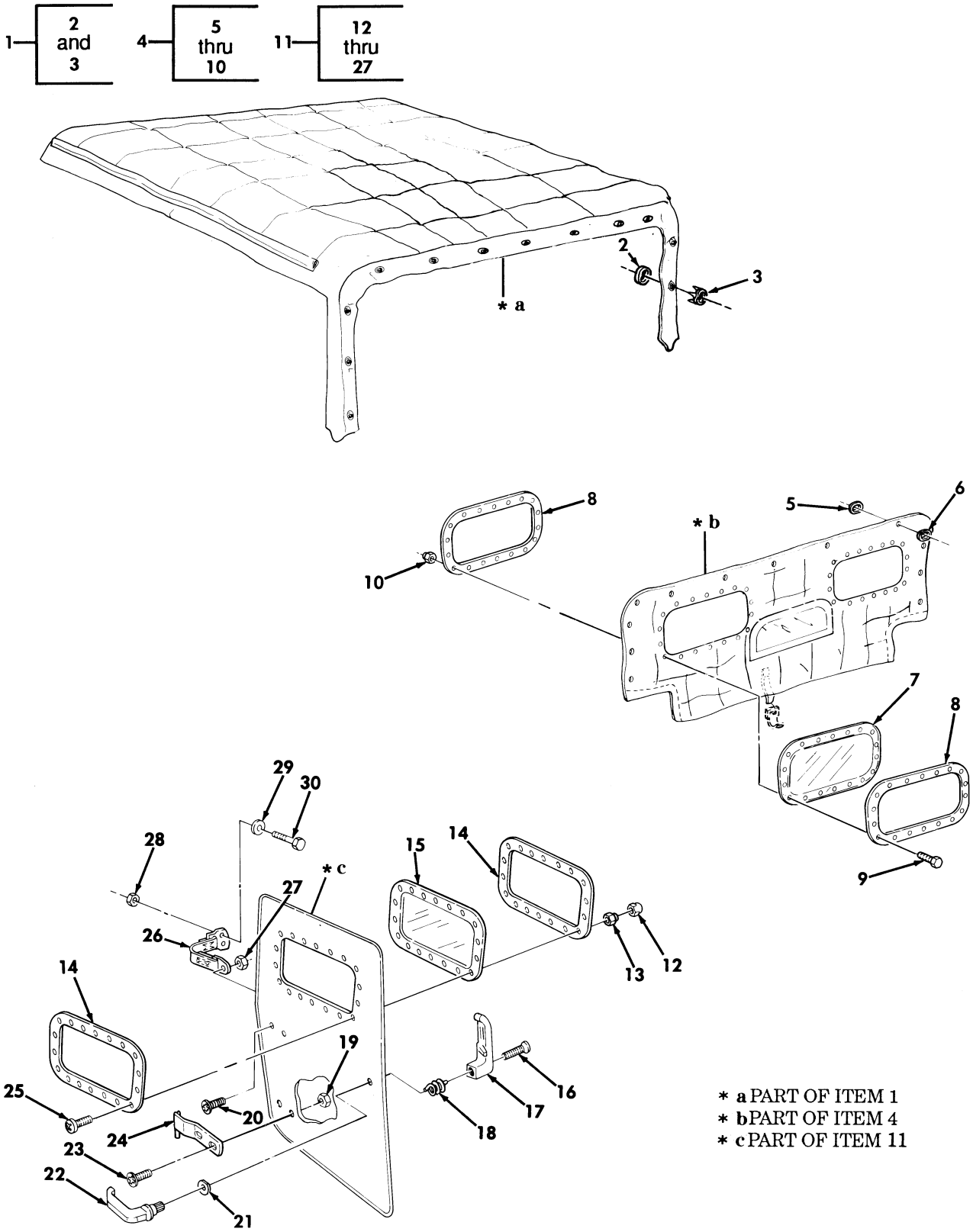

Figure 378. Arctic Kit, Four Man Crew, Top Curtain, Rear Curtain, and Door Assemblies.

(1) ITEM NO	(2) SMR CODE	(3) NSN	(4) CAGEC	(5) PART NUMBER	(6) DESCRIPTION AND USABLE ON CODES(UOC)	(7) QTY
					GROUP 3303 WINTERIZATION KITS	
					FIG. 378 ARCTIC KIT,FOUR MAN CREW, TOP CURTAIN,REAR CURTAIN,AND DOOR ASSEMBLIES	
1	PAOFF	2540013298649	19207	12342153-1	COVER,FITTED,VEHICU PART OF KIT P/N 5705692..... UOC:AVY,A13,A14,BVY,HVY,H13,H14,NNN	1
2	PAFZZ	5325006049662	21450	426686	.CLINCH PLATE,TURNBU..... UOC:AVY,A13,A14,BVY,HVY,H13,H14,NNN	31
3	PAFZZ	5325002818643	21450	426687	.SOCKET,TURNBUTTON F..... UOC:AVY,A13,A14,BVY,HVY,H13,H14,NNN	31
4	PAOFF	2540013360791	19207	12342153-2	CURTAIN,VEHICULAR PART OF KIT P/N 5705692..... UOC:AVY,A13,A14,BVY,HVY,H13,H14,NNN	1
5	PAFZZ	5325006049662	21450	426686	.CLINCH PLATE,TURNBU..... UOC:AVY,A13,A14,BVY,HVY,H13,H14,NNN	13
6	PAFZZ	5325002818643	21450	426687	.SOCKET,TURNBUTTON F..... UOC:AVY,A13,A14,BVY,HVY,H13,H14,NNN	13
7	XBFZZ		19207	12340604	.WINDOW,VEHICULAR..... UOC:AVY,A13,A14,BVY,HVY,H13,H14,NNN	2
8	PFOZZ	5340011980686	19207	12340710	.PLATE,RETAINING,WIN..... UOC:AVY,A13,A14,BVY,HVY,H13,H14,NNN	4
9	PAOZZ	5305009846195	96906	MS35206-247	.SCREW,MACHINE #8-32 X 3/4..... UOC:AVY,A13,A14,BVY,HVY,H13,H14,NNN	36
10	PAOZZ	5310009416019	96906	MS21083N08	.NUT,SELF-LOCKING,HE #8-32..... UOC:AVY,A13,A14,BVY,HVY,H13,H14,NNN	36
11	PAOOO	2510011975547	34623	SF5581724	DOOR,VEHICULAR FRONT,R.H. PART OF KIT P/N 5705692..... UOC:AVY,A13,A14,BVY,HVY,H13,H14,NNN	1
11	PAOOO	2510011975546	34623	SF5581723	DOOR,VEHICULAR FRONT,L.H. PART OF KIT P/N 5705692..... UOC:AVY,A13,A14,BVY,HVY,H13,H14,NNN	1
11	PAOOO	2510013302249	19207	12342157	DOOR,VEHICULAR REAR,L.H. PART OF KIT P/N 5705692..... UOC:AVY,A13,A14,BVY,HVY,H13,H14,NNN	1
11	PAOOO	2510013302250	19207	12342155	DOOR,VEHICULAR REAR,R.H. PART OF KIT P/N 5705692..... UOC:AVY,A13,A14,BVY,HVY,H13,H14,NNN	1
12	PAOZZ	5340010263250	81349	M5501/7-F2	.CAP-PLUG,PROTECTIVE..... UOC:AVY,A13,A14,BVY,HVY,H13,H14,NNN	18
13	PAOZZ	5310009416019	96906	MS21083N08	.NUT,SELF-LOCKING,HE #8-32..... UOC:AVY,A13,A14,BVY,HVY,H13,H14,NNN	18
14	PFOZZ	5340011980686	19207	12340710	.PLATE,RETAINING,WIN..... UOC:AVY,A13,A14,BVY,HVY,H13,H14,NNN	2
15	XBOZZ		19207	12340605	.WINDOW,VEHICULAR..... UOC:AVY,A13,A14,BVY,HVY,H13,H14,NNN	1
16	PAOZZ	5305000711327	96906	MS51960-70	.SCREW,MACHINE #10-32 X 1/4 PART OF KIT P/N 5705618 PART OF KIT P/N 5705619..... UOC:AVY,A13,A14,BVY,HVY,H13,H14,NNN	1
17	PAOZZ	2540012037721	19207	12301363-2	.HANDLE,DOOR,VEHICUL L.H. PART OF	1

(1) ITEM NO	(2) SMR CODE	(3) NSN	(4) CAGEC	(5) PART NUMBER	(6) DESCRIPTION AND USABLE ON CODES(UOC)	(7) QTY
					KIT P/N 5705619.....	
					UOC:AVY,A13,A14,BVY,HVY,H13,H14,NNN	
17	PAOZZ	2540012001994	19207	12301363-1	.HANDLE,DOOR,VEHICUL R.H. PART OF	1
					KIT P/N 5705618.....	
					UOC:AVY,A13,A14,BVY,HVY,H13,H14,NNN	
18	PAOZZ	5360013157212	19207	12356764-1	.SPRING,HELICAL,TORS L.H. PART OF	1
					KIT P/N 5705619.....	
					UOC:AVY,A13,A14,BVY,HVY,H13,H14,NNN	
18	PAOZZ	5360013157211	19207	12356764-2	.SPRING,HELICAL,TORS R.H. PART OF	1
					KIT P/N 5705618.....	
					UOC:AVY,A13,A14,BVY,HVY,H13,H14,NNN	
19	PAOZZ	5310011520598	24617	271172	.NUT,SELF-LOCKING,AS.....	13
					UOC:AVY,A13,A14,BVY,HVY,H13,H14,NNN	
20	PAOZZ	5305009881725	96906	MS35206-281	.SCREW,MACHINE 1/4-20 X 3/4.....	1
					UOC:AVY,A13,A14,BVY,HVY,H13,H14,NNN	
21	PAOZZ	5310012059056	34623	5581321	.WASHER,FLAT 5/8 PART OF KIT P/N	1
					5705618 PART OF KIT P/N 5705619.....	
					UOC:AVY,A13,A14,BVY,HVY,H13,H14,NNN	
22	PAOZZ	2540012001995	19207	12301365	.HANDLE,DOOR,VEHICUL L.H.,R.H. PART	1
					OF KIT P/N 5705618 PART OF KIT P/N	
					5705619.....	
					UOC:AVY,A13,A14,BVY,HVY,H13,H14,NNN	
23	PAOZZ	5305000711315	96906	MS51957-79	.SCREW,MACHINE 1/4-20 X 1/2.....	3
					UOC:AVY,A13,A14,BVY,HVY,H13,H14,NNN	
24	PAOZZ	5340012059022	19207	12340193-2	.LEAF,BUTT HINGE FRONT AND REAR,	2
					L.H.....	
					UOC:AVY,A13,A14,BVY,HVY,H13,H14,NNN	
24	PAOZZ	5340012059021	19207	12340193-1	.LEAF,BUTT HINGE FRONT AND REAR,	2
					R.H.....	
					UOC:AVY,A13,A14,BVY,HVY,H13,H14,NNN	
25	PAOZZ	5305009846195	96906	MS35206-247	.SCREW,MACHINE #8-32 X 3/4.....	18
					UOC:AVY,A13,A14,BVY,HVY,H13,H14,NNN	
26	PAOZZ	5340012547189	19207	12340201	.LOOP,STRAP FASTENER.....	1
					UOC:AVY,A13,A14,BVY,HVY,H13,H14,NNN	
27	PAOZZ	5310009971888	96906	MS35649-2252	.NUT,PLAIN,HEXAGON 1/4-20.....	1
					UOC:AVY,A13,A14,BVY,HVY,H13,H14,NNN	
28	PAOZZ	5310002416658	96906	MS51943-34	NUT,SELF-LOCKING,HE 5/16-20 PART OF	2
					KIT P/N 5705692.....	
					UOC:AVY,A13,A14,BVY,HVY,H13,H14,NNN	
29	PAOZZ	5310000814219	96906	MS27183-12	WASHER,FLAT 11/32 PART OF KIT P/N	2
					5705692.....	
					UOC:AVY,A13,A14,BVY,HVY,H13,H14,NNN	
30	PAOZZ	5305000514076	80204	B1821BH031F100N	SCREW,CAP,HEXAGON H 5/16-24 X 1.00	2
					PART OF KIT P/N 5705692.....	
					UOC:AVY,A13,A14,BVY,HVY,H13,H14,NNN	
KIT	PDFZZ	2540011992390	19207	5705692	WINTERIZATION KIT,V.....	1
					UOC:A13,A14,HVY,H13,H14	
					BEZEL,AUTO (1) 377-12	
					BOLT,MACHINE (4) 376-19	
					BOLT,MACHINE (6) 377-15	
					BOW,VEHICULAR TOP (2) 376-1	
					BOW,VEHICULAR TOP (1) 376-10	
					BRACKET,MOUNTING (1) 376-21	

(1) ITEM NO	(2) SMR CODE	(3) NSN	(4) CAGEC	(5) PART NUMBER	(6) DESCRIPTION AND USABLE ON CODES(UOC)	(7) QTY
					BRACKET,MOUNTING (1) 376-21	
					BRACKET,MOUNTING (1) 377-3	
					BRACKET,MOUNTING (1) 377-3	
					COVER,FITTED,VEHICU(1) 378-1	
					CURTAIN,VEHICULAR (1) 378-4	
					DOOR,VEHICULAR (1) 378-11	
					DOOR,VEHICULAR (1) 378-11	
					DOOR,VEHICULAR (1) 378-11	
					DOOR,VEHICULAR (1) 378-11	
					FASTENER,TAPE,HOOK (2) 377-9	
					HANDLE,BOW (6) 377-6	
					HANDRAIL,VEHICULAR (1) 376-6	
					HANDRAIL,VEHICULAR (1) 376-6	
					MOUNT (4) 377-10	
					NUT,PLAIN,BLIND RIV(6) 377-11	
					NUT,SELF-LOCKING,HE(4) 376-13	
					NUT,SELF-LOCKING,HE(2) 376-14	
					NUT,SELF-LOCKING,HE(4) 376-18	
					NUT,SELF-LOCKING,HE(12) 377-7	
					NUT,SELF-LOCKING,HE(10) 377-8	
					NUT,SELF-LOCKING.HE(2) 378-28	
					RIVET,BLIND (8) 376-22	
					SCREW,CAP,HEXAGON H(10) 377-1	
					SCREW,CAP,HEXAGON H(2) 378-30	
					SCREW,CAP,SOCKET HE(2) 376-9	
					SCREW,MACHINE (8) 376-5	
					SCREW,MACHINE (4) 376-17	
					SCREW,MACHINE (2) 376-20	
					SCREW,MACHINE (12) 377-5	
					STRIKE,CATCH (1) 376-16	
					STRIKE,CATCH (1) 376-16	
					WASHER,FLAT (12) 376-15	
					WASHER,FLAT (20) 377-2	
					WASHER,FLAT (6) 377-14	
					WASHER,FLAT (2) 378-29	

END OF FIGURE

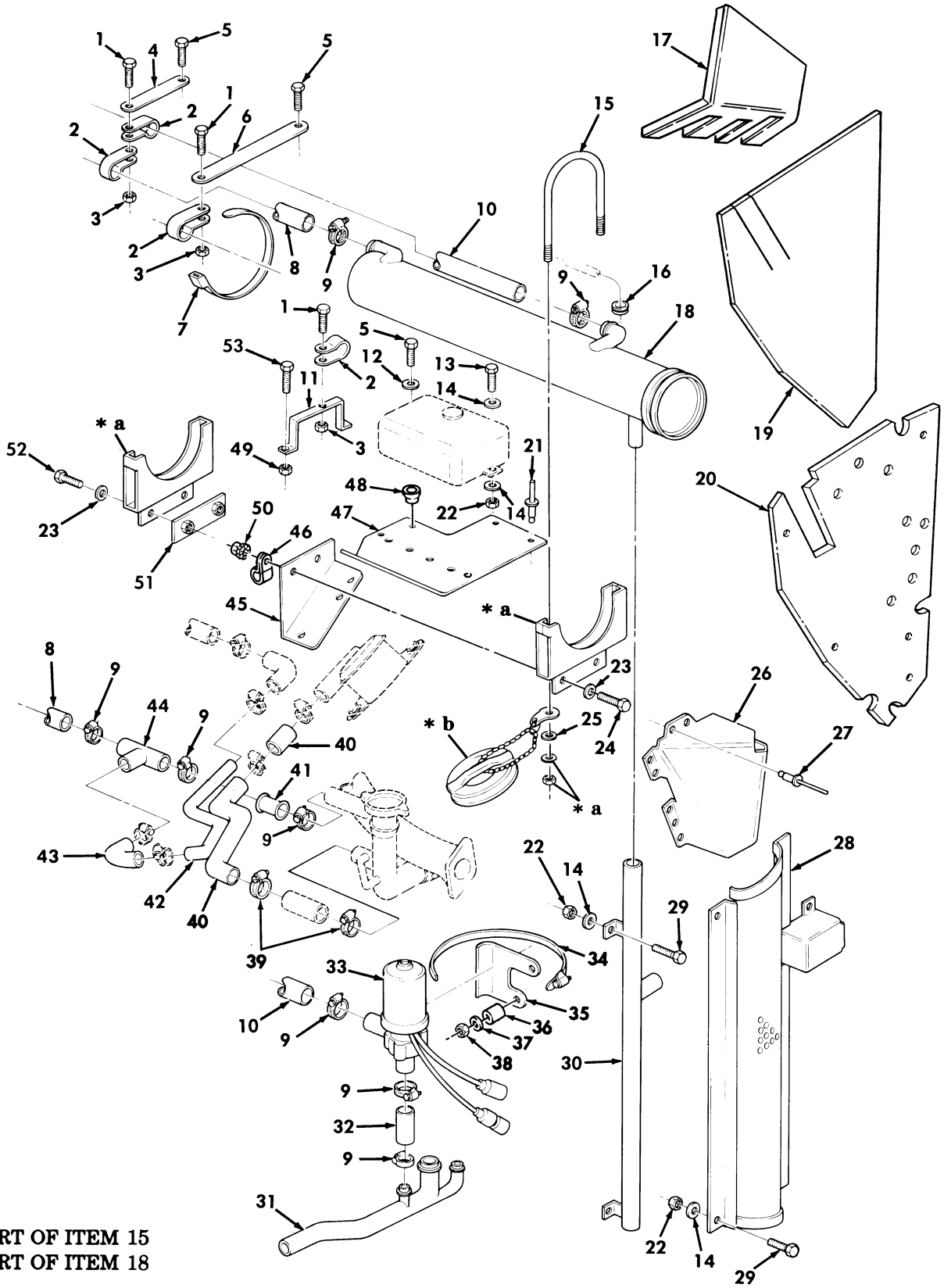

* a PART OF ITEM 15
* b PART OF ITEM 18

Figure 379. Swingfire Heater Kit and Related Parts.

(1) ITEM NO	(2) SMR CODE	(3) NSN	(4) CAGEC	(5) PART NUMBER	(6) DESCRIPTION AND USABLE ON CODES(UOC)	(7) QTY
					GROUP 3303 WINTERIZATION KITS	
					FIG. 379 SWINGFIRE HEATER KIT AND RELATED PARTS	
1	PAOZZ	5305009846194	96906	MS35206-246	SCREW,MACHINE #8-32 X 5/8 PART OF KIT P/N 5705615..... UOC:AVY,A11,A13,A14,A15,A20,A24,A25, A26,A27,B16,B17,B18,HVY,H11,H13,H14, H15,H16,H17,H18,H20,H21,H24,H25,H26, H27,H28,MMM	3
2	PAOZZ	5340009226300	96906	MS21333-77	CLAMP,LOOP PART OF KIT P/N 5705615.. UOC:AVY,A11,A13,A14,A15,A20,A24,A25, A26,A27,B16,B17,B18,HVY,H11,H13,H14, H15,H16,H17,H18,H20,H21,H24,H25,H26, H27,H28,MMM	4
3	PAOZZ	5310008113494	96906	MS21044-N08	NUT,SELF-LOCKING,HE #8-32 PART OF KIT P/N 5705615..... UOC:AVY,A11,A13,A14,A15,A20,A24,A25, A26,A27,B16,B17,B18,HVY,H11,H13,H14, H15,H16,H17,H18,H20,H21,H24,H25,H26, H27,H28,MMM	3
4	PAOZZ	5365013145544	19207	12368397-2	SPACER,PLATE PART OF KIT P/N 5705615 UOC:AVY,A11,A13,A14,A15,A20,A24,A25, A26,A27,B16,B17,B18,HVY,H11,H13,H14, H15,H16,H17,H18,H20,H21,H24,H25,H26, H27,H28,MMM	1
5	PAOZZ	5305007578287	96906	MS51851-43	SCREW,TAPPING #8-12 X 3/8 PART OF KIT P/N 5705615..... UOC:AVY,A11,A13,A14,A15,A20,A24,A25, A26,A27,B16,B17,B18,HVY,H11,H13,H14, H15,H16,H17,H18,H20,H21,H24,H25,H26, H27,H28,MMM	3
6	PAOZZ	5365013145544	19207	12368397-2	SPACER,PLATE PART OF KIT P/N 5705615 UOC:AVY,A11,A13,A14,A15,A20,A24,A25, A26,A27,B16,B17,B18,HVY,H11,H13,H14, H15,H16,H17,H18,H20,H21,H24,H25,H26, H27,H28,MMM	1
7	PAOZZ	5975005709598	96906	MS3367-7-9	STRAP,TIEDOWN,ELECT PART OF KIT P/N 5705615..... UOC:AVY,A11,A13,A14,A15,A20,A24,A25, A26,A27,B16,B17,B18,HVY,H11,H13,H14, H15,H16,H17,H18,H20,H21,H24,H25,H26, H27,H28,MMM	9
8	MOOZZ		96906	MS521301A203R 74	HOSE,NONMETALLIC MAKE FROM HOSE,P/N MS521301A203R,74 INCHES LONG PART OF KIT P/N 5705615..... UOC:AVY,A11,A13,A14,A15,A20,A24,A25, A26,A27,B16,B17,B18,HVY,H11,H13,H14, H15,H16,H17,H18,H20,H21,H24,H25,H26, H27,H28,MMM	1
9	PAOZZ	4730009083194	96906	MS35842-11	CLAMP,HOSE PART OF KIT P/N 5705615.. UOC:AVY,A11,A13,A14,A15,A20,A24,A25, A26,A27,B16,B17,B18,HVY,H11,H13,H14,	8

(1) ITEM NO	(2) SMR CODE	(3) NSN	(4) CAGEC	(5) PART NUMBER	(6) DESCRIPTION AND USABLE ON CODES(UOC)	(7) QTY
					H15,H16,H17,H18,H20,H21,H24,H25,H26, H27,H28,MMM	
10	MOOZZ		96906	MS521301A203R 58	HOSE,NONMETALLIC MAKE FROM HOSE,P/N MS521301A203R,58 INCHES LONG PART OF KIT P/N 5705615..... UOC:AVY,A11,A13,A14,A15,A20,A24,A25, A26,A27,B16,B17,B18,HVY,H11,H13,H14, H15,H16,H17,H18,H20,H21,H24,H25,H26, H27,H28,MMM	1
11	PAOZZ	5340013145567	19207	12368392	BRACKET,MULTIPLE AN PART OF KIT P/N 5705615..... UOC:AVY,A11,A13,A14,A15,A20,A24,A25, A26,A27,B16,B17,B18,HVY,H11,H13,H14, H15,H16,H17,H18,H20,H21,H24,H25,H26, H27,H28,MMM	1
12	PAOZZ	5310005590070	96906	MS35333-38	WASHER,LOCK PART OF KIT P/N 5705615. UOC:AVY,A11,A13,A14,A15,A20,A24,A25, A26,A27,B16,B17,B18,HVY,H11,H13,H14, H15,H16,H17,H18,H20,H21,H24,H25,H26, H27,H28,MMM	1
13	PAOZZ	5306000680514	80204	B1821BH025F088N	BOLT,MACHINE 1/4-28 X 7/8 PART OF KIT P/N 5705615..... UOC:AVY,A11,A13,A14,A15,A20,A24,A25, A26,A27,B16,B17,B18,HVY,H11,H13,H14, H15,H16,H17,H18,H20,H21,H24,H25,H26, H27,H28,MMM	2
14	PAOZZ	5310008094058	96906	MS27183-10	WASHER,FLAT 1/4 PART OF KIT P/N 5705615..... UOC:AVY,A11,A13,A14,A15,A20,A24,A25, A26,A27,B16,B17,B18,HVY,H11,H13,H14, H15,H16,H17,H18,H20,H21,H24,H25,H26, H27,H28,MMM	16
15	PAOZZ	5340013154955	19207	12368375	CLAMP,LOOP PART OF KIT P/N 5705615.. UOC:AVY,A11,A13,A14,A15,A20,A24,A25, A26,A27,B16,B17,B18,HVY,H11,H13,H14, H15,H16,H17,H18,H20,H21,H24,H25,H26, H27,H28,MMM	2
16	PAOZZ	5325013097164	96906	MS35489-149	GROMMET,NONMETALLIC .875 PART OF KIT P/N 5705615..... UOC:AVY,A11,A13,A14,A15,A20,A24,A25, A26,A27,B16,B17,B18,HVY,H11,H13,H14, H15,H16,H17,H18,H20,H21,H24,H25,H26, H27,H28,MMM	1
17	PAOZZ	2540014456029	19207	12342880	INSULATION,THERMAL, L.H. PART OF KIT P/N 5705615..... UOC:AVY,A11,A13,A14,A15,A20,A24,A25, A26,A27,B16,B17,B18,HVY,H11,H13,H14, H15,H16,H17,H18,H20,H21,H24,H25,H26, H27,H28,MMM	1
18	PFOZZ	2540013509380	19207	12342038	WATER JACKET,VEHICU PART OF KIT P/N 5705615..... UOC:AVY,A11,A13,A14,A15,A20,A24,A25, A26,A27,B16,B17,B18,HVY,H11,H13,H14, H15,H16,H17,H18,H20,H21,H24,H25,H26,	1

(1) ITEM NO	(2) SMR CODE	(3) NSN	(4) CAGEC	(5) PART NUMBER	(6) DESCRIPTION AND USABLE ON CODES(UOC)	(7) QTY
					H27,H28,MMM	
19	PAOZZ	2835014657620	19207	12342881-1	INSULATION,COWL LEF L.H. PART OF KIT P/N 5705615..... UOC:AVY,A11,A13,A14,A15,A20,A24,A25, A26,A27,B16,B17,B18,HVY,H11,H13,H14, H15,H16,H17,H18,H20,H21,H24,H25,H26, H27,H28,MMM	1
20	PAOZZ	2540014491718	34623	12342878-1	ARMOR,SUPPLEMENTAL, R.H. PART OF KIT P/N 5705615..... UOC:AVY,A11,A13,A14,A15,A20,A24,A25, A26,A27,B16,B17,B18,HVY,H11,H13,H14, H15,H16,H17,H18,H20,H21,H24,H25,H26, H27,H28,MMM	1
20	PAOZZ	2540014519345	19207	12342878-2	ARMOR,SUPPLEMENTAL, L.H. PART OF KIT P/N 5705615..... UOC:AVY,A11,A13,A14,A15,A20,A24,A25, A26,A27,B16,B17,B18,HVY,H11,H13,H14, H15,H16,H17,H18,H20,H21,H24,H25,H26, H27,H28,MMM	1
21	PAOZZ	5320011357319	80205	NAS9301BNS-6-03	RIVET,BLIND 3/16 X 3/16 PART OF KIT P/N 5705615..... UOC:AVY,A11,A13,A14,A15,A20,A24,A25, A26,A27,B16,B17,B18,HVY,H11,H13,H14, H15,H16,H17,H18,H20,H21,H24,H25,H26, H27,H28,MMM	2
22	PAOZZ	5310009359022	96906	MS51943-32	NUT,SELF-LOCKING,HE 1/4-20 PART OF KIT P/N 5705615..... UOC:AVY,A11,A13,A14,A15,A20,A24,A25, A26,A27,B16,B17,B18,HVY,H11,H13,H14, H15,H16,H17,H18,H20,H21,H24,H25,H26, H27,H28,MMM	14
23	PAOZZ	5310006379541	96906	MS35338-46	WASHER,LOCK 1/4 PART OF KIT P/N 5705615..... UOC:AVY,A11,A13,A14,A15,A20,A24,A25, A26,A27,B16,B17,B18,HVY,H11,H13,H14, H15,H16,H17,H18,H20,H21,H24,H25,H26, H27,H28,MMM	4
24	PAOZZ	5306000680513	60285	6893-2	BOLT,MACHINE 1/4-20 X 3/4 PART OF KIT P/N 5705615..... UOC:AVY,A11,A13,A14,A15,A20,A24,A25, A26,A27,B16,B17,B18,HVY,H11,H13,H14, H15,H16,H17,H18,H20,H21,H24,H25,H26, H27,H28,MMM	4
25	PAOZZ	5310012805796	96906	MS27183-57	WASHER,FLAT 3/8 PART OF KIT P/N 5705615..... UOC:AVY,A11,A13,A14,A15,A20,A24,A25, A26,A27,B16,B17,B18,HVY,H11,H13,H14, H15,H16,H17,H18,H20,H21,H24,H25,H26, H27,H28,MMM	1
26	PAOZZ	2540013141130	19207	12368398	HOUSING,HEATER COMP PART OF KIT P/N 5705615..... UOC:AVY,A11,A13,A14,A15,A20,A24,A25, A26,A27,B16,B17,B18,HVY,H11,H13,H14, H15,H16,H17,H18,H20,H21,H24,H25,H26,	1

(1) ITEM NO	(2) SMR CODE	(3) NSN	(4) CAGEC	(5) PART NUMBER	(6) DESCRIPTION AND USABLE ON CODES(UOC)	(7) QTY
					H27,H28,MMM	
27	PAOZZ	5320012751998	11815	BAPKTR-64	RIVET,BLIND 1/8 PART OF KIT P/N 5705615..... UOC:AVY,A11,A13,A14,A15,A20,A24,A25, A26,A27,B16,B17,B18,HVY,H11,H13,H14, H15,H16,H17,H18,H20,H21,H24,H25,H26, H27,H28,MMM	11
28	PFOZZ	2540013173309	34623	12368400	GUARD ASSEMBLY,BRUS PART OF KIT P/N 5705615..... UOC:AVY,A11,A13,A14,A15,A20,A24,A25, A26,A27,B16,B17,B18,HVY,H11,H13,H14, H15,H16,H17,H18,H20,H21,H24,H25,H26, H27,H28,MMM	1
29	PAOZZ	5306000680513	60285	6893-2	BOLT,MACHINE 1/4-20 X 3/4 PART OF KIT P/N 5705615..... UOC:AVY,A11,A13,A14,A15,A20,A24,A25, A26,A27,B16,B17,B18,HVY,H11,H13,H14, H15,H16,H17,H18,H20,H21,H24,H25,H26, H27,H28,MMM	12
30	PAOZZ	2990013140151	19207	12368443	PIPE,EXHAUST PART OF KIT P/N 5705615 UOC:AVY,A11,A13,A14,A15,A20,A24,A25, A26,A27,B16,B17,B18,HVY,H11,H13,H14, H15,H16,H17,H18,H20,H21,H24,H25,H26, H27,H28,MMM	1
31	PFOZZ	4710013139340	19207	12342095	TUBE,BENT,METALLIC PART OF KIT P/N 5705615..... UOC:AVY,A11,A13,A14,A15,A20,A24,A25, A26,A27,B16,B17,B18,HVY,H11,H13,H14, H15,H16,H17,H18,H20,H21,H24,H25,H26, H27,H28,MMM	1
32	MOOZZ		96906	MS521301A203R 7	HOSE,NONMETALLIC MAKE FROM HOSE,P/N MS521301A203R,7.50 INCHES LONG PART OF KIT P/N 5705615..... UOC:AVY,A11,A13,A14,A15,A20,A24,A25, A26,A27,B16,B17,B18,HVY,H11,H13,H14, H15,H16,H17,H18,H20,H21,H24,H25,H26, H27,H28,MMM	1
33	PAOZZ	2930013140145	19207	12342294	PUMP,COOLING SYSTEM PART OF KIT P/N 5705615..... UOC:AVY,A11,A13,A14,A15,A20,A24,A25, A26,A27,B16,B17,B18,HVY,H11,H13,H14, H15,H16,H17,H18,H20,H21,H24,H25,H26, H27,H28,MMM	1
34	PAOZZ	4730009098627	01276	FF9311-36	CLAMP,HOSE PART OF KIT P/N 5705615.. UOC:AVY,A11,A13,A14,A15,A20,A24,A25, A26,A27,B16,B17,B18,HVY,H11,H13,H14, H15,H16,H17,H18,H20,H21,H24,H25,H26, H27,H28,MMM	1
35	PAOZZ	5340013142445	19207	12368374	BRACKET,MOUNTING PART OF KIT P/N 5705615..... UOC:AVY,A11,A13,A14,A15,A20,A24,A25, A26,A27,B16,B17,B18,HVY,H11,H13,H14, H15,H16,H17,H18,H20,H21,H24,H25,H26, H27,H28,MMM	1

(1) ITEM NO	(2) SMR CODE	(3) NSN	(4) CAGEC	(5) PART NUMBER	(6) DESCRIPTION AND USABLE ON CODES(UOC)	(7) QTY
36	PAOZZ	5365012550965	19207	12338521-14	SPACER,SLEEVE PART OF KIT P/N 5705615..... UOC:AVY,A11,A13,A14,A15,A20,A24,A25, A26,A27,B16,B17,B18,HVY,H11,H13,H14, H15,H16,H17,H18,H20,H21,H24,H25,H26, H27,H28,MMM	2
37	PAOZZ	5310012067306	7X677	11500207	WASHER,LOCK PART OF KIT P/N 5705615. UOC:AVY,A11,A13,A14,A15,A20,A24,A25, A26,A27,B16,B17,B18,HVY,H11,H13,H14, H15,H16,H17,H18,H20,H21,H24,H25,H26, H27,H28,MMM	2
38	PAOZZ	5310013151535	24617	11505922	NUT,PLAIN,HEXAGON M10-O.35 PART OF KIT P/N 5705615..... UOC:AVY,A11,A13,A14,A15,A20,A24,A25, A26,A27,B16,B17,B18,HVY,H11,H13,H14, H15,H16,H17,H18,H20,H21,H24,H25,H26, H27,H28,MMM	2
39	PAOZZ	4730009083193	7Z588	30024H	CLAMP,HOSE PART OF KIT P/N 5705615.. UOC:AVY,A11,A13,A14,A15,A20,A24,A25, A26,A27,B16,B17,B18,HVY,H11,H13,H14, H15,H16,H17,H18,H20,H21,H24,H25,H26, H27,H28,MMM	2
40	PAOZZ	4720012111998	19207	12340492	HOSE,NONMETALLIC PART OF KIT P/N 5705615..... UOC:AVY,A11,A13,A14,A15,A20,A24,A25, A26,A27,B16,B17,B18,HVY,H11,H13,H14, H15,H16,H17,H18,H20,H21,H24,H25,H26, H27,H28,MMM	2
41	MOOZZ		96906	521301A203R 5.50	HOSE,NONMETALLIC MAKE FROM HOSE,P/N MS521301A203R,5.50 INCHES LONG PART OF KIT P/N 5705615..... UOC:AVY,A11,A13,A14,A15,A20,A24,A25, A26,A27,B16,B17,B18,HVY,H11,H13,H14, H15,H16,H17,H18,H20,H21,H24,H25,H26, H27,H28,MMM	1
42	PAOZZ	4710012572649	19207	12340498	TUBE ASSEMBLY,METAL PART OF KIT P/N 5705615..... UOC:AVY,A11,A13,A14,A15,A20,A24,A25, A26,A27,B16,B17,B18,HVY,H11,H13,H14, H15,H16,H17,H18,H20,H21,H24,H25,H26, H27,H28,MMM	1
43	PAOZZ	4720012572655	19207	12340493	HOSE,PREFORMED PART OF KIT P/N 5705615..... UOC:AVY,A11,A13,A14,A15,A20,A24,A25, A26,A27,B16,B17,B18,HVY,H11,H13,H14, H15,H16,H17,H18,H20,H21,H24,H25,H26, H27,H28,MMM	1
44	PAOZZ	4730001003918	96906	MS24521-7	TEE,HOSE PART OF KIT P/N 5705615.... UOC:AVY,A11,A13,A14,A15,A20,A24,A25, A26,A27,B16,B17,B18,HVY,H11,H13,H14, H15,H16,H17,H18,H20,H21,H24,H25,H26, H27,H28,MMM	1
45	PFOZZ	5340013201079	19207	12368387	BRACKET,ANGLE PART OF KIT P/N 5705615.....	1

(1) ITEM NO	(2) SMR CODE	(3) NSN	(4) CAGEC	(5) PART NUMBER	(6) DESCRIPTION AND USABLE ON CODES(UOC)	(7) QTY
					UOC:AVY,A11,A13,A14,A15,A20,A24,A25, A26,A27,B16,B17,B18,HVY,H11,H13,H14, H15,H16,H17,H18,H20,H21,H24,H25,H26, H27,H28,MMM	
46	PAOZZ	5340009936207	96906	MS21333-99	CLAMP,LOOP PART OF KIT P/N 5705615.. UOC:AVY,A11,A13,A14,A15,A20,A24,A25, A26,A27,B16,B17,B18,HVY,H11,H13,H14, H15,H16,H17,H18,H20,H21,H24,H25,H26, H27,H28,MMM	1
47	PAOZZ	5340013154120	19207	12368391	PLATE,MOUNTING PART OF KIT P/N 5705615..... UOC:AVY,A11,A13,A14,A15,A20,A24,A25, A26,A27,B16,B17,B18,HVY,H11,H13,H14, H15,H16,H17,H18,H20,H21,H24,H25,H26, H27,H28,MMM	1
48	PAOZZ	5975012113142	28520	SB-750-625-2840	BUSHING,ELECTRICAL PART OF KIT P/N 5705615..... UOC:AVY,A11,A13,A14,A15,A20,A24,A25, A26,A27,B16,B17,B18,HVY,H11,H13,H14, H15,H16,H17,H18,H20,H21,H24,H25,H26, H27,H28,MMM	1
49	PAOZZ	5310008775797	96906	MS21044-N3	NUT,SELF-LOCKING,HE #10-32 PART OF KIT P/N 5705615..... UOC:AVY,A11,A13,A14,A15,A20,A24,A25, A26,A27,B16,B17,B18,HVY,H11,H13,H14, H15,H16,H17,H18,H20,H21,H24,H25,H26, H27,H28,MMM	2
50	PAOZZ	5310013335245	24617	271175	NUT,SELF-LOCKING,HE 1/4-20 PART OF KIT P/N 5705615..... UOC:AVY,A11,A13,A14,A15,A20,A24,A25, A26,A27,B16,B17,B18,HVY,H11,H13,H14, H15,H16,H17,H18,H20,H21,H24,H25,H26, H27,H28,MMM	1
51	PAOZZ	5340013146838	19207	12368390	PLATE,MENDING PART OF KIT P/N 5705615..... UOC:AVY,A11,A13,A14,A15,A20,A24,A25, A26,A27,B16,B17,B18,HVY,H11,H13,H14, H15,H16,H17,H18,H20,H21,H24,H25,H26, H27,H28,MMM	1
52	PAOZZ	5305000680515	80204	B1821BH025F100N	SCREW,CAP,HEXAGON H 1/4-28 X 1.00 PART OF KIT P/N 5705615..... UOC:AVY,A11,A13,A14,A15,A20,A24,A25, A26,A27,B16,B17,B18,HVY,H11,H13,H14, H15,H16,H17,H18,H20,H21,H24,H25,H26, H27,H28,MMM	2
53	PAOZZ	5305009897435	96906	MS35207-264	SCREW,MACHINE #10-32 X 5/8 PART OF KIT P/N 5705615..... UOC:AVY,A11,A13,A14,A15,A20,A24,A25, A26,A27,B16,B17,B18,HVY,H11,H13,H14, H15,H16,H17,H18,H20,H21,H24,H25,H26, H27,H28,MMM	2

END OF FIGURE

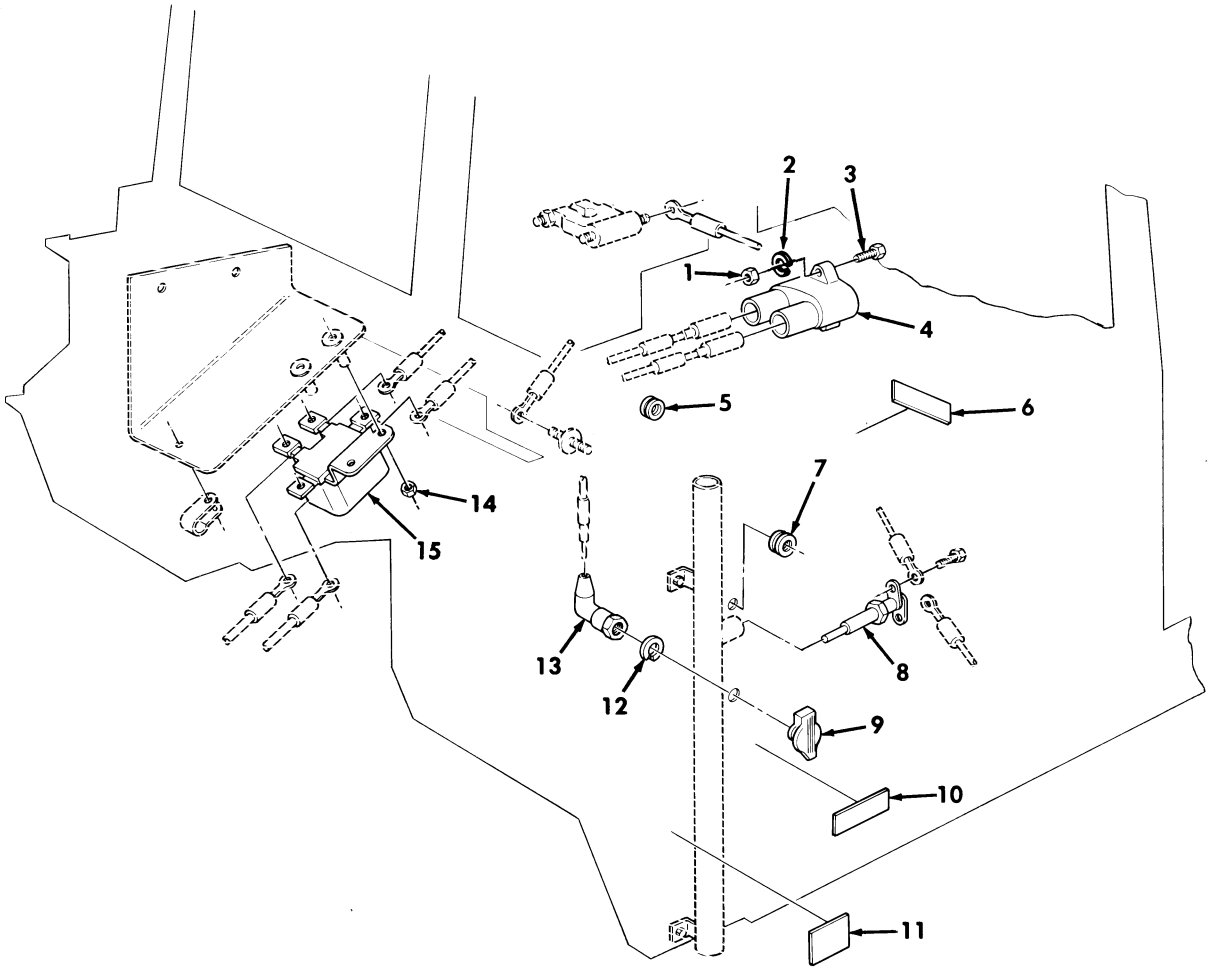

Figure 380. Swingfire Heater Kit, Circuit Breaker and Related Parts.

(1) ITEM NO	(2) SMR CODE	(3) NSN	(4) CAGEC	(5) PART NUMBER	(6) DESCRIPTION AND USABLE ON CODES(UOC)	(7) QTY
					GROUP 3303 WINTERIZATION KITS	
					FIG. 380 SWINGFIRE HEATER KIT, CIRCUIT BREAKER AND RELATED PARTS	
1	PAOZZ	5310009349754	96906	MS35650-382	NUT,PLAIN,HEXAGON #8-32 PART OF KIT P/N 5705615..... UOC:AVY,A11,A13,A14,A15,A20,A24,A25, A26,A27,B16,B17,B18,HVY,H11,H13,H14, H15,H16,H17,H18,H20,H21,H24,H25,H26, H27,H28,MMM	2
2	PAOZZ	5310000453299	96906	MS35338-42	WASHER,LOCK PART OF KIT P/N 5705615. UOC:AVY,A11,A13,A14,A15,A20,A24,A25, A26,A27,B16,B17,B18,HVY,H11,H13,H14, H15,H16,H17,H18,H20,H21,H24,H25,H26, H27,H28,MMM	2
3	PAOZZ	5305009846195	96906	MS35206-247	SCREW,MACHINE #8-32 X 3/4 PART OF KIT P/N 5705615..... UOC:AVY,A11,A13,A14,A15,A20,A24,A25, A26,A27,B16,B17,B18,HVY,H11,H13,H14, H15,H16,H17,H18,H20,H21,H24,H25,H26, H27,H28,MMM	2
4	PAOZZ	5925014302318	58536	AA5557/01-001	CIRCUIT BREAKER PART OF KIT P/N 5705615..... UOC:AVY,A11,A13,A14,A15,A20,A24,A25, A26,A27,B16,B17,B18,HVY,H11,H13,H14, H15,H16,H17,H18,H20,H21,H24,H25,H26, H27,H28,MMM	1
5	PAOZZ	5325002708891	96906	MS35489-21	GROMMET,NONMETALLIC PART OF KIT P/N 5705615..... UOC:AVY,A11,A13,A14,A15,A20,A24,A25, A26,A27,B16,B17,B18,HVY,H11,H13,H14, H15,H16,H17,H18,H20,H21,H24,H25,H26, H27,H28,MMM	1
6	PAOZZ	9905013177987	19207	12342026	PLATE,INSTRUCTION PART OF KIT P/N 5705615..... UOC:AVY,A11,A13,A14,A15,A20,A24,A25, A26,A27,B16,B17,B18,HVY,H11,H13,H14, H15,H16,H17,H18,H20,H21,H24,H25,H26, H27,H28,MMM	1
7	PAOZZ	5325002919366	96906	MS35489-11	GROMMET,NONMETALLIC PART OF KIT P/N 5705615..... UOC:AVY,A11,A13,A14,A15,A20,A24,A25, A26,A27,B16,B17,B18,HVY,H11,H13,H14, H15,H16,H17,H18,H20,H21,H24,H25,H26, H27,H28,MMM	1
8	PAOZZ	5930013182809	19207	12356766	SWITCH,THERMOSTATIC PART OF KIT P/N 5705615..... UOC:AVY,A11,A13,A14,A15,A20,A24,A25, A26,A27,B16,B17,B18,HVY,H11,H13,H14, H15,H16,H17,H18,H20,H21,H24,H25,H26, H27,H28,MMM	1
9	PAOZZ	5935013142084	19207	11669531	CONNECTOR SET,ELECT PART OF KIT P/N	1

(1) ITEM NO	(2) SMR CODE	(3) NSN	(4) CAGEC	(5) PART NUMBER	(6) DESCRIPTION AND USABLE ON CODES(UOC)	(7) QTY
					5705615..... UOC:AVY,A11,A13,A14,A15,A20,A24,A25, A26,A27,B16,B17,B18,HVY,H11,H13,H14, H15,H16,H17,H18,H20,H21,H24,H25,H26, H27,H28,MMM	
10	PAOZZ	9905013177986	19207	12342027	PLATE,IDENTIFICATIO PART OF KIT P/N 5705615..... UOC:AVY,A11,A13,A14,A15,A20,A24,A25, A26,A27,B16,B17,B18,HVY,H11,H13,H14, H15,H16,H17,H18,H20,H21,H24,H25,H26, H27,H28,MMM	1
11	PAOZZ	7690013158540	19207	12342024	MARKER,IDENTIFICATI PART OF KIT P/N 5705615..... UOC:AVY,A11,A13,A14,A15,A20,A24,A25, A26,A27,B16,B17,B18,HVY,H11,H13,H14, H15,H16,H17,H18,H20,H21,H24,H25,H26, H27,H28,MMM	1
12	PAOZZ	5310005503714	96906	MS35333-47	WASHER,LOCK 3/4 PART OF KIT P/N 5705615..... UOC:AVY,A11,A13,A14,A15,A20,A24,A25, A26,A27,B16,B17,B18,HVY,H11,H13,H14, H15,H16,H17,H18,H20,H21,H24,H25,H26, H27,H28,MMM	1
13	PAOZZ	5975005536995	96906	MS25171-1S	CABLE NIPPLE,ELECTR PART OF KIT P/N 5705615..... UOC:AVY,A11,A13,A14,A15,A20,A24,A25, A26,A27,B16,B17,B18,HVY,H11,H13,H14, H15,H16,H17,H18,H20,H21,H24,H25,H26, H27,H28,MMM	1
14	PAOZZ	5310009359022	96906	MS51943-32	NUT,SELF-LOCKING,HE 1/4-28 PART OF KIT P/N 5705615..... UOC:AVY,A11,A13,A14,A15,A20,A24,A25, A26,A27,B16,B17,B18,HVY,H11,H13,H14, H15,H16,H17,H18,H20,H21,H24,H25,H26, H27,H28,MMM	2
15	PAOZZ	2920008483292	16764	1116968	CUTOUT RELAY,ENGINE 24 VOLTS PART OF KIT P/N 5705615..... UOC:AVY,A11,A13,A14,A15,A20,A24,A25, A26,A27,B16,B17,B18,HVY,H11,H13,H14, H15,H16,H17,H18,H20,H21,H24,H25,H26, H27,H28,MMM	1

END OF FIGURE

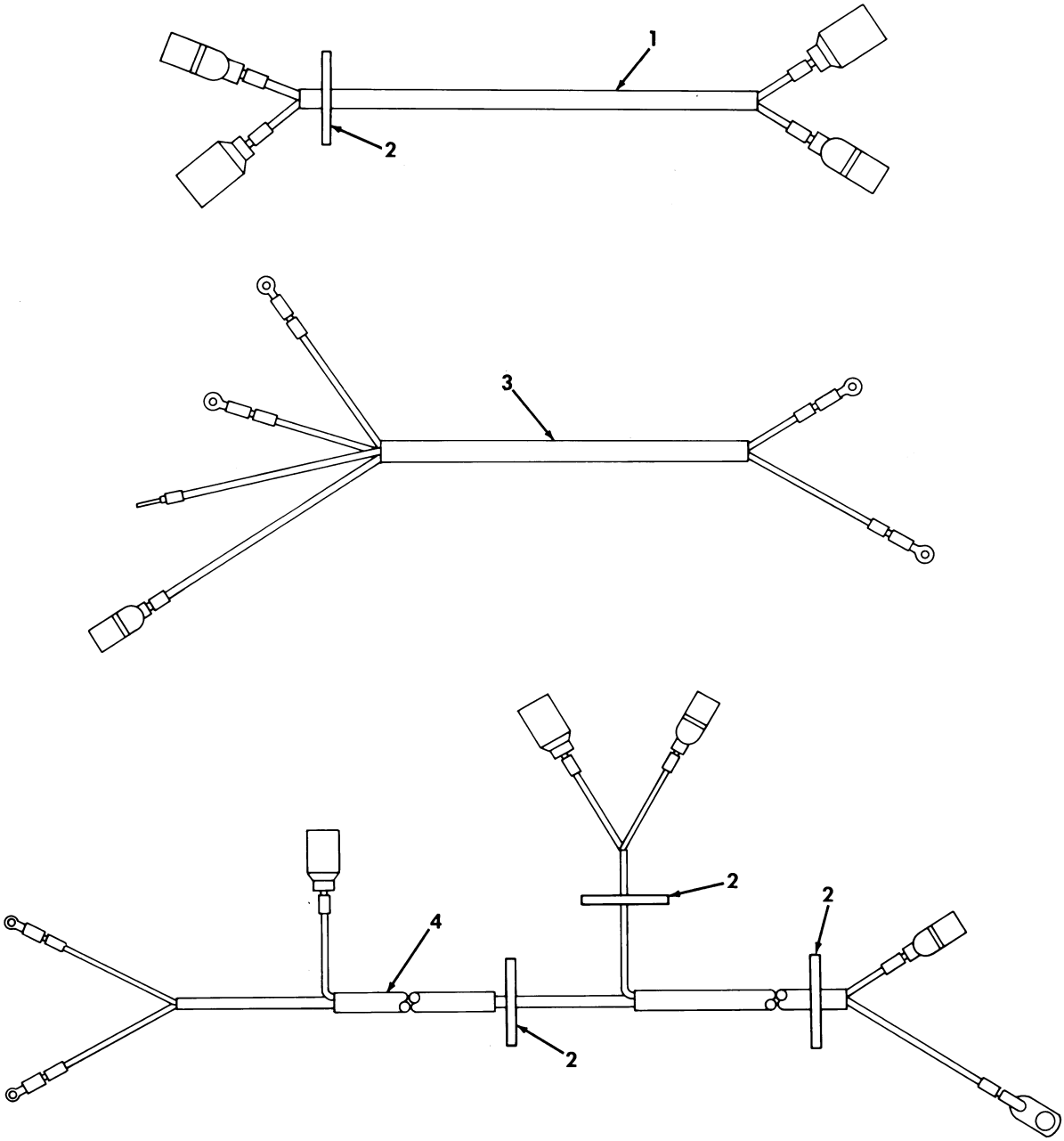

Figure 381. Swingfire Heater Kit, Harness Assemblies.

(1) ITEM NO	(2) SMR CODE	(3) NSN	(4) CAGEC	(5) PART NUMBER	(6) DESCRIPTION AND USABLE ON CODES(UOC)	(7) QTY
					GROUP 3303 WINTERIZATION KITS	
					FIG. 381 SWINGFIRE HEATER KIT, HARNESS ASSEMBLIES	
1	PAOZZ	6150013145643	19207	12368396	CABLE ASSEMBLY,SPEC PART OF KIT P/N 5705615..... UOC:AVY,A11,A13,A14,A15,A20,A24,A25, A26,A27,B16,B17,B18,HVY,H11,H13,H14, H15,H16,H17,H18,H20,H21,H24,H25,H26, H27,H28,MMM	1
2	PAOZZ	5975005709598	96906	MS3367-7-9	STRAP,TIEDOWN,ELECT PART OF KIT P/N 5705615..... UOC:AVY,A11,A13,A14,A15,A20,A24,A25, A26,A27,B16,B17,B18,HVY,H11,H13,H14, H15,H16,H17,H18,H20,H21,H24,H25,H26, H27,H28,MMM	4
3	PAOZZ	6150013151148	19207	12368394	WIRING HARNESS,BRAN PART OF KIT P/N 5705615..... UOC:AVY,A11,A13,A14,A15,A20,A24,A25, A26,A27,B16,B17,B18,HVY,H11,H13,H14, H15,H16,H17,H18,H20,H21,H24,H25,H26, H27,H28,MMM	1
4	PFOZZ	6150013145241	19207	12368395	CABLE ASSEMBLY,SPEC PART OF KIT P/N 5705615..... UOC:AVY,A11,A13,A14,A15,A20,A24,A25, A26,A27,B16,B17,B18,HVY,H11,H13,H14, H15,H16,H17,H18,H20,H21,H24,H25,H26, H27,H28,MMM	1
KIT	PDFZZ	2540013149320	19207	5705615	PARTS KIT,VEHICULAR SWINGFIRE HEATER..... UOC:AVY,A11,A13,A14,A15,A20,A24,A25, A26,A27,B16,B17,B18,HVY,H11,H13,H14, H15,H16,H17,H18,H20,H21,H24,H25,H26, H27,H28,MMM	1
					ARMOR,SUPPLEMENTAL,(1) 379-20	
					ARMOR,SUPPLEMENTAL,(1) 379-20	
					BOLT,MACHINE (12) 379-29	
					BOLT,MACHINE (4) 379-24	
					BOLT,MACHINE (2) 379-13	
					BRACKET,MOUNTING (1) 379-35	
					BRACKET,ANGLE (1) 379-45	
					BRACKET,MULTIPLE AN(1) 379-11	
					BUSHING,ELECTRICAL (1) 379-48	
					CABLE ASSEMBLY,SPEC(1) 381-4	
					CABLE ASSEMBLY,SPEC(1) 381-1	
					CABLE NIPPLE,ELECTR(1) 380-13	
					CIRCUIT BREAKER (1) 380-4	
					CLAMP,HOSE (8) 379-9	
					CLAMP,HOSE (2) 379-39	
					CLAMP,HOSE (1) 379-34	
					CLAMP,LOOP (2) 379-15	
					CLAMP,LOOP (4) 379-2	

(1) ITEM NO	(2) SMR CODE	(3) NSN	(4) CAGEC	(5) PART NUMBER	(6) DESCRIPTION AND USABLE ON CODES(UOC)	(7) QTY
					CLAMP,LOOP (1) 379-46	
					CONNECTOR SET,ELECT(1) 380-9	
					CUTOUT RELAY,ENGINE(1) 380-15	
					GROMMET,NONMETALLIC(1) 380-7	
					GROMMET,NONMETALLIC(1) 380-5	
					GROMMET,NONMETALLIC(1) 379-16	
					GUARD ASSEMBLY,BRUS(1) 379-28	
					HOSE,NONMETALLIC (1) 379-8	
					HOSE,NONMETALLIC (1) 379-10	
					HOSE,NONMETALLIC (1) 379-32	
					HOSE,NONMETALLIC (2) 379-40	
					HOSE,NONMETALLIC (1) 379-41	
					HOSE,PREFORMED (1) 379-43	
					HOUSING,HEATER COMP(1) 379-26	
					INSULATION,COWL LEF(1) 379-19	
					INSULATION,THERMAL,(1) 379-17	
					MARKER,IDENTIFICATI(1) 380-11	
					NUT,PLAIN,HEXAGON (2) 380-1	
					NUT,PLAIN,HEXAGON (2) 379-38	
					NUT,SELF-LOCKING,HE(2) 379-49	
					NUT,SELF-LOCKING,HE(3) 379-3	
					NUT,SELF-LOCKING,HE(14) 379-22	
					NUT,SELF-LOCKING,HE(2) 380-14	
					NUT,SELF-LOCKING,HE(1) 379-50	
					PIPE,EXHAUST (1) 379-30	
					PLATE,IDENTIFICATIO(1) 380-10	
					PLATE,INSTRUCTION (1) 380-6	
					PLATE,MENDING (1) 379-51	
					PLATE,MOUNTING (1) 379-47	
					PUMP,COOLING SYSTEM(1) 379-33	
					RIVET,BLIND (11) 379-27	
					RIVET,BLIND (2) 379-21	
					SCREW,CAP,HEXAGON H(2) 379-52	
					SCREW,MACHINE (3) 379-1	
					SCREW,MACHINE (2) 380-3	
					SCREW,MACHINE (2) 379-53	
					SCREW,TAPPING (3) 379-5	
					SPACER,PLATE (1) 379-6	
					SPACER,PLATE (1) 379-4	
					SPACER,SLEEVE (2) 379-36	
					STRAP,TIEDOWN,ELECT(9) 379-7	
					STRAP,TIEDOWN,ELECT(4) 381-2	
					SWITCH,THERMOSTATIC(1) 380-8	
					TEE,HOSE (1) 379-44	
					TUBE ASSEMBLY,METAL(1) 379-42	
					TUBE,BENT,METALLIC (1) 379-31	
					WASHER,FLAT (16) 379-14	
					WASHER,LOCK (1) 379-12	
					WASHER,LOCK (1) 380-12	
					WASHER,LOCK (2) 379-37	
					WASHER,LOCK (4) 379-23	
					WASHER,LOCK (1) 379-25	
					WASHER,LOCK (2) 380-2	

(1) ITEM NO	(2) SMR CODE	(3) NSN	(4) CAGEC	(5) PART NUMBER	(6) DESCRIPTION AND USABLE ON CODES(UOC)	(7) QTY
					WATER JACKET,VEHICU(1) 379-18	
					WIRING HARNESS,BRAN(1) 381-3	

END OF FIGURE

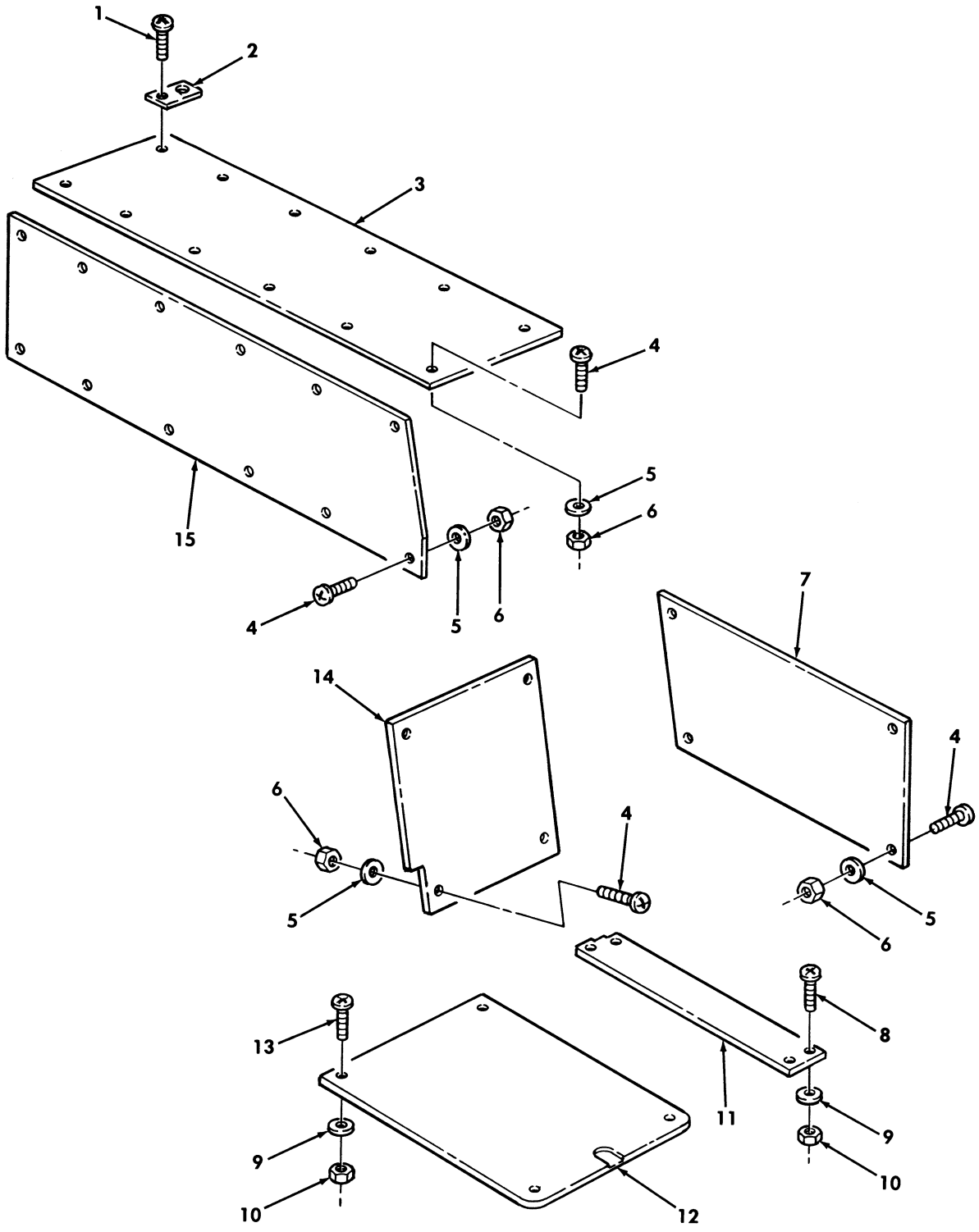

Figure 382. Two Door Seat and Floor Covers.

(1) ITEM NO	(2) SMR CODE	(3) NSN	(4) CAGEC	(5) PART NUMBER	(6) DESCRIPTION AND USABLE ON CODES(UOC)	(7) QTY
					GROUP 3303 WINTERIZATION KITS	
					FIG. 382 TWO DOOR SEAT AND FLOOR COVERS	
1	PAOZZ	5305009002546	96906	MS35492-28	SCREW,WOOD #6 X .50,PART OF KIT P/N 5705611..... UOC:A13,A14,H13,H14	12
2	PAOZZ	5365013168966	19207	12342210	SPACER,PLATE PART OF KIT P/N 5705611 UOC:A13,A14,H13,H14	12
3	KFFZZ		19207	12342181	TOP COVER ASSEMBLY L.H.,PART OF KIT P/N 5705611..... UOC:A13,A14,H13,H14	1
3	KFFZZ		19207	12342182-2	TOP COVER ASSEMBLY R.H.,PART OF KIT 5705611..... UOC:A13,A14,H13,H14	1
4	PAOZZ	5305009932457	96906	MS35207-284	SCREW,MACHINE #10-32 X 1.50,PART OF KIT P/N 5705611..... UOC:A13,A14,H13,H14	48
5	PAOZZ	5310008094058	96906	MS27183-10	WASHER,FLAT #10,PART OF KIT P/N 5705611..... UOC:A13,A14,H13,H14	48
6	PAOZZ	5310004838791	96906	MS17829-4F	NUT,SELF-LOCKING,HE #10-32,PART OF KIT P/N 5705611..... UOC:A13,A14,H13,H14	48
7	MFFZZ		19207	12342171-1	COVER R.H., MAKE FROM PLYWOOD,P/N NN-P-530 PART OF KIT P/N 5705611.... UOC:A13,A14,H13,H14	1
7	MFFZZ		19207	12342171-2	COVER L.H.,MAKE FROM PLYWOOD,P/N NN-P-530 PART OF KIT P/N 5705611.... UOC:A13,A14,H13,H14	1
8	PAOZZ	5305009592704	96906	MS35191-324	SCREW,MACHINE 3/8-24 X 1.75,PART OF KIT P/N 5705611..... UOC:A13,A14,H13,H14	8
9	PAOZZ	5310010164871	88044	AN960-616	WASHER,FLAT 3/8,PART OF KIT P/N 5705611..... UOC:A13,A14,H13,H14	16
10	PAOZZ	5310010583353	72582	192481	NUT,SELF-LOCKING,HE 3/8-24,PART OF KIT P/N 5705611..... UOC:A13,A14,H13,H14	16
11	KFFZZ		19207	12342170	COVER,FLOOR L.H.,PART OF KIT P/N 5705611..... UOC:A13,A14,H13,H14	1
11	KFFZZ		19207	12342265	COVER,FLOOR R.H.,PART OF KIT P/N 5705611..... UOC:A13,A14,H13,H14	1
12	KFFZZ		19207	12342184	SEAT BACK PART OF KIT P/N 5705611.. UOC:A13,A14,H13,H14	2
13	PAOZZ	5305008242004	96906	MS35191-326	SCREW,MACHINE 3/8-24 X 2.50,PART OF KIT P/N 5705611..... UOC:A13,A14,H13,H14	8
14	KFFZZ		19207	12342172	COVER ASSEMBLY L.H.,PART OF KIT P/N 5705611.....	1

(1) ITEM NO	(2) SMR CODE	(3) NSN	(4) CAGEC	(5) PART NUMBER	(6) DESCRIPTION AND USABLE ON CODES(UOC)	(7) QTY
					UOC:A13,A14,H13,H14	
14	KFFZZ		19207	12342183	COVER ASSEMBLY R.H.,PART OF KIT P/N 5705611.....	1
					UOC:A13,A14,H13,H14	
15	KFFZZ		19207	12342180	COVER ASSEMBLY L.H.,SIDE,PART OF KIT P/N 5705611.....	1
15	KFFZZ		19207	12342257	COVER ASSEMBLY R.H.,SIDE,PART OF KIT P/N 5705611.....	1
					UOC:A13,A14,H13,H14	

END OF FIGURE

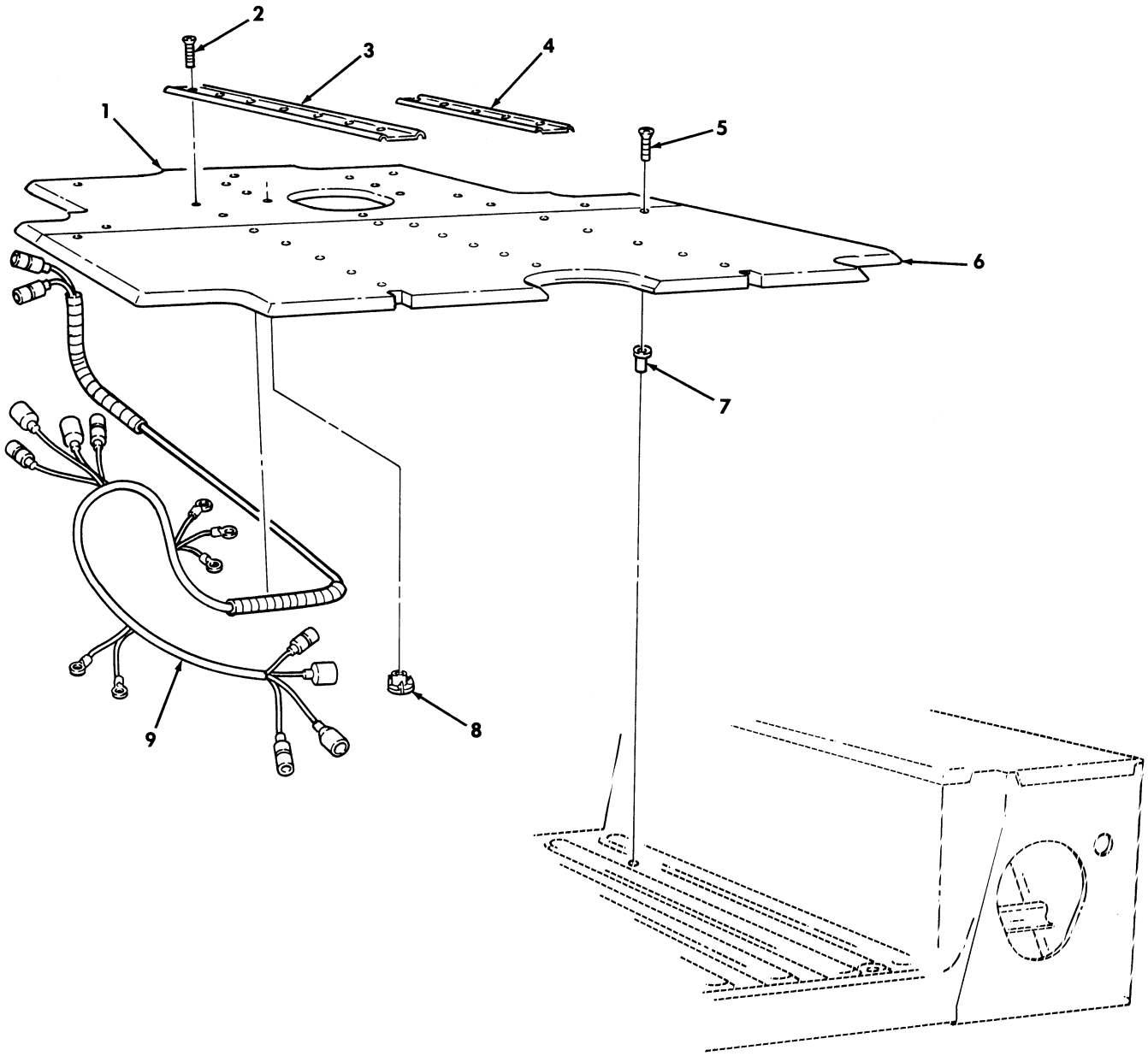

Figure 383. Cargo Floor Cover and Harness Assembly.

(1) ITEM NO	(2) SMR CODE	(3) NSN	(4) CAGEC	(5) PART NUMBER	(6) DESCRIPTION AND USABLE ON CODES(UOC)	(7) QTY
					GROUP 3303 WINTERIZATION KITS	
					FIG. 383 CARGO FLOOR COVER AND HARNESS ASSEMBLY	
1	KFFZZ		19207	12342178	FLOOR COVER ASSEMBL PART OF KIT P/N 5705611..... UOC:A13,A14,H13,H14	1
2	PAOZZ	5305009026643	96906	MS35492-76	SCREW,WOOD #10 X .75 PART OF KIT P/N 5705611..... UOC:A13,A14,H13,H14	19
3	PAOZZ	2590013174856	34623	12342179	MOLDING,METAL PART OF KIT P/N 5705611..... UOC:A13,A14,H13,H14	2
4	PAOZZ	2590013173953	34623	12342203	MOLDING,METAL PART OF KIT P/N 5705611..... UOC:A13,A14,H13,H14	1
5	PAOZZ	5305009585262	96906	MS35190-324	SCREW,MACHINE 3/8-16 X 2.25 PART OF KIT P/N 5705611..... UOC:A13,A14,H13,H14	9
6	KFFZZ		19207	12342177	FLOOR COVER ASSEMBL PART OF KIT P/N 5705611..... UOC:A13,A14,H13,H14	1
7	PAOZZ	5310012838482	96906	MS27130-CR31	NUT,PLAIN,BLIND RIV 3/8-16 PART OF KIT P/N 5705611..... UOC:A13,A14,H13,H14	9
8	PAOZZ	5310010256444	96906	MS51941-10	NUT,PLAIN,PLATE PART OF KIT P/N 5705611..... UOC:A13,A14,H13,H14	6
9	PFFZZ	6150013246356	19207	12342255	CABLE ASSEMBLY,SPEC PART OF KIT P/N 5705611..... UOC:A13,A14,H13,H14	1

END OF FIGURE

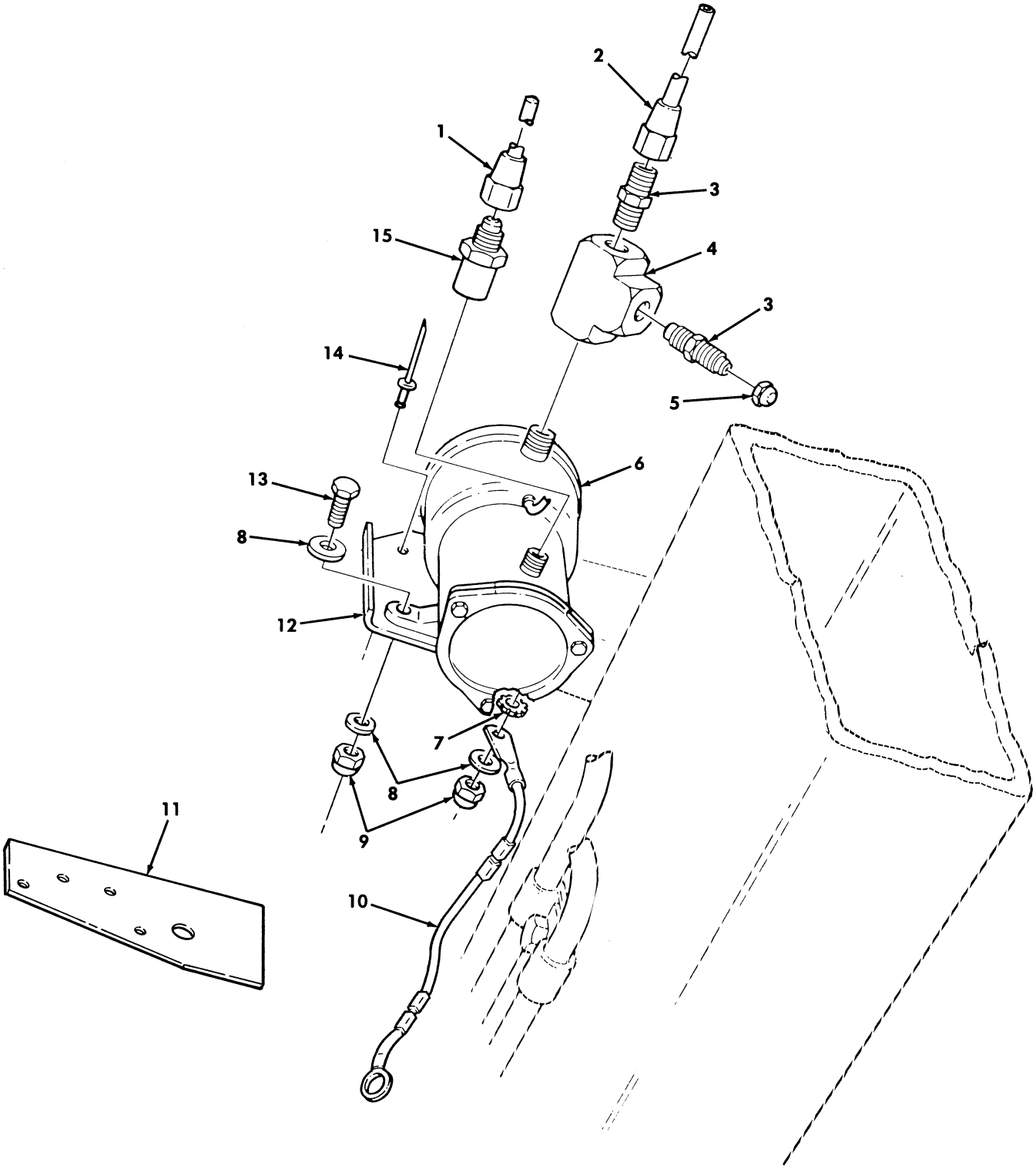

Figure 384. Winterization Kit, Fuel Pump, and Attaching Hardware.

(1) ITEM NO	(2) SMR CODE	(3) NSN	(4) CAGEC	(5) PART NUMBER	(6) DESCRIPTION AND USABLE ON CODES(UOC)	(7) QTY
					GROUP 3303 WINTERIZATION KITS	
					FIG. 384 WINTERIZATION KIT,FUEL PUMP AND ATTACHING HARDWARE	
1	PFOZZ	4710012030608	34623	5588696	TUBE ASSEMBLY,METAL PART OF KIT P/N 5705611..... UOC:A13,A14,H13,H14	1
2	PFOZZ	4710013171046	34623	12342277	TUBE ASSEMBLY,METAL PART OF KIT P/N 5705611..... UOC:A13,A14,H13,H14	1
3	PAOZZ	4730005291237	13899	191410	ADAPTER,STRAIGHT,PI PART OF KIT P/N 5705611..... UOC:A13,A14,H13,H14	2
4	PAOZZ	4730010489739	81343	4-4-4 140438C	TEE,PIPE PART OF KIT P/N 5705611... UOC:A13,A14,H13,H14	1
5	PAOZZ	4730002608285	81343	5010112B(N5)	CAP,TUBE PART OF KIT P/N 5705611... UOC:A13,A14,H13,H14	1
* 6	PAOZZ	2910009309367	53711	2590174	PUMP,FUEL,ELECTRICA PART OF KIT P/N 5705611..... UOC:A13,A14,H13,H14	1
7	PAOZZ	5310005501130	96906	MS35338-40	WASHER,LOCK 1/4,PART OF KIT P/N 5705611..... UOC:A13,A14,H13,H14	1
8	PAOZZ	5310008094058	96906	MS27183-10	WASHER,FLAT 1/4,PART OF KIT P/N 5705611..... UOC:A13,A14,H13,H14	4
9	PAOZZ	5310000614650	96906	MS51943-31	NUT,SELF-LOCKING,HE PART OF KIT P/N 5705611..... UOC:A13,A14,H13,H14	2
10	PAOZZ	6150012608000	34623	5595746	LEAD,ELECTRICAL PART OF KIT P/N 5705611..... UOC:A13,A14,H13,H14	1
11	PFFZZ	2910013206645	34623	12340696	TEMPLATE,FUEL PART OF KIT P/N 5705611..... UOC:A13,A14,H13,H14	1
12	PFOZZ	5340012043903	19207	12338559	BRACKET,DOUBLE ANGL PART OF KIT P/N 5705611..... UOC:A13,A14,H13,H14	1
13	PAOZZ	5305000680502	96906	MS90725-6	SCREW,CAP,HEXAGON H 1/4-20 X .75, PART OF KIT P/N 5705611..... UOC:A13,A14,H13,H14	2
* 14	PAOZZ	5320011357319	11815	CR-213-6-3	RIVET,BLIND .126-.187,PART OF KIT P/N 5705611..... UOC:A13,A14,H13,H14	4
15	PAOZZ	4730002776347	34623	5583386	ADAPTER,STRAIGHT,PI PART OF KIT P/N 5705611..... UOC:A13,A14,H13,H14	1

END OF FIGURE

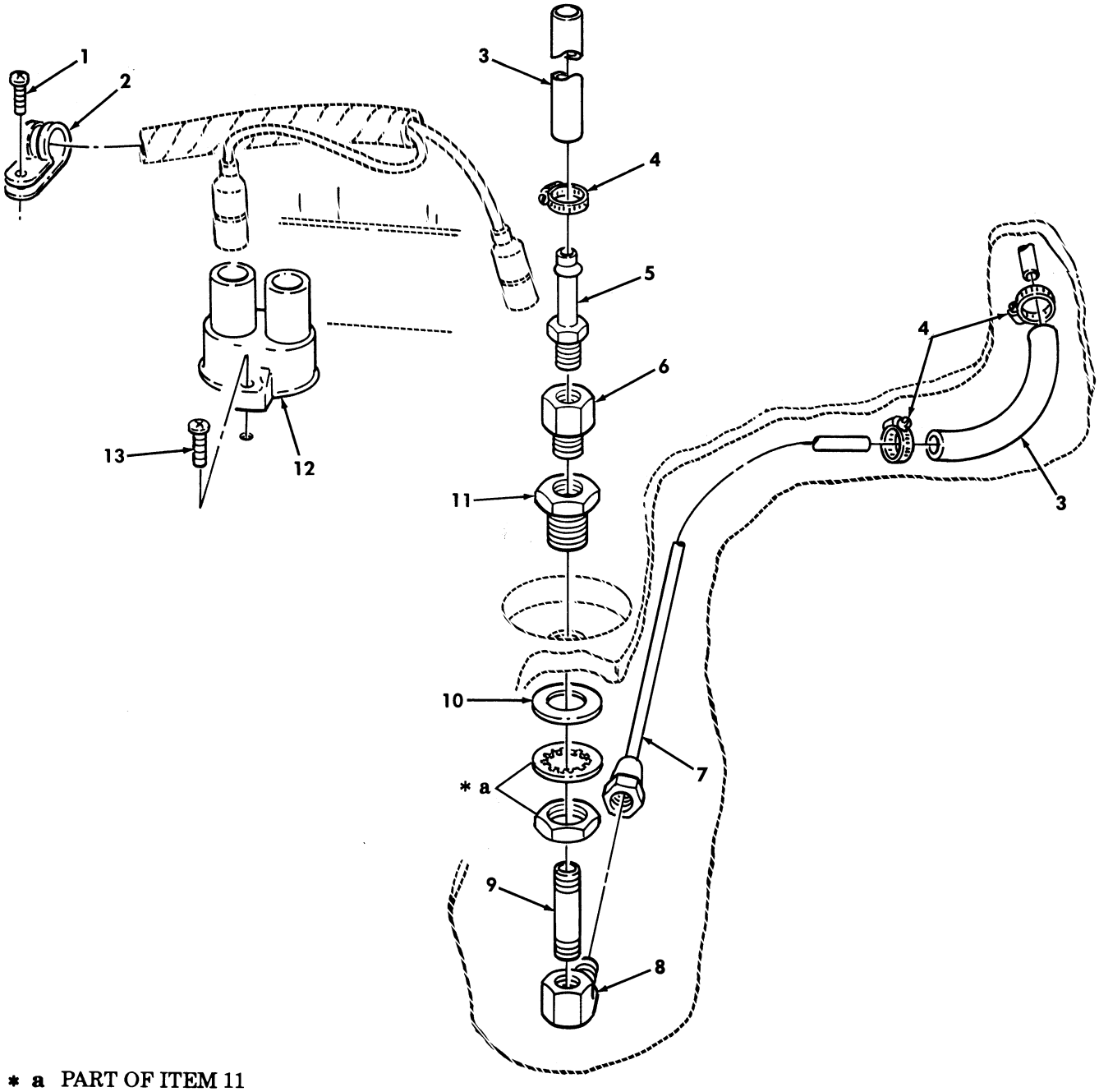

* a PART OF ITEM 11

Figure 385. Fuel Pump Tube Assembly.

(1) ITEM NO	(2) SMR CODE	(3) NSN	(4) CAGEC	(5) PART NUMBER	(6) DESCRIPTION AND USABLE ON CODES(UOC)	(7) QTY
					GROUP 3303 WINTERIZATION KITS	
					FIG. 385 FUEL PUMP TUBE ASSEMBLY	
1	PAOZZ	5305000567879	96906	MS35493-74	SCREW,WOOD #10 X .50,PART OF KIT P/N 5705611..... UOC:A13,A14,H13,H14	1
2	PAOZZ	5340009899222	96906	MS21333-74	CLAMP,LOOP PART OF KIT P/N 5705611. UOC:A13,A14,H13,H14	1
* 3	MOOZZ		7X677	94383154-3	TUBE MAKE FROM HOSE,P/N G3336US-10, 7 INCHES LONG PART OF KIT P/N 5705611..... UOC:A13,A14,H13,H14	2
4	PAOZZ	4730002782523	88907	B54-32780	CLAMP,LOOP PART OF KIT P/N 5705611. UOC:A13,A14,H13,H14	3
5	PAOZZ	4730013576523	4A439	BN252	ADAPTER,ATRAIGHT,PI PART OF KIT P/N 5705611..... UOC:A13,A14,H13,H14	1
6	PAOZZ	4730013477342	81343	4-4 130139C	COUPLING,PIPE PART OF KIT P/N 5705611..... UOC:A13,A14,H13,H14	1
7	PAOZZ	4710013171045	34623	12342270	TUBE ASEMBLY,METAL PART OF KIT P/N 5705611..... UOC:A13,A14,H13,H14	1
8	PFOZZ	4730012031025	81343	5010203CA	ELBOW,PIPE TO TUBE PART OF KIT P/N 5705611..... UOC:A13,A14,H13,H14	1
9	PAOZZ	4730013153242	96906	MS51873-32	NIPPLE,PIPE PART OF KIT P/N 5705611 UOC:A13,A14,H13,H14	1
10	PAOZZ	5310008098533	96906	MS27183-23	WASHER,FLAT 1-1/2,PART OF KIT P/N 5705611..... UOC:A13,A14,H13,H14	1
11	PAOZZ	4730008975497	79470	W21204	COUPLING,PIPE PART OF KIT P/N 5705611..... UOC:A13,A14,H13,H14	1
12	PAOZZ	5925000264767	81349	M13516/1-1	CIRCUIT BREAKER PART OF KIT P/N 5705611..... UOC:A13,A14,H13,H14	1
13	PAOZZ	5305009012134	96906	MS35493-55	SCREW,WOOD #8 X 1.00,PART OF KIT P/N 5705611..... UOC:A13,A14,H13,H14	2

END OF FIGURE

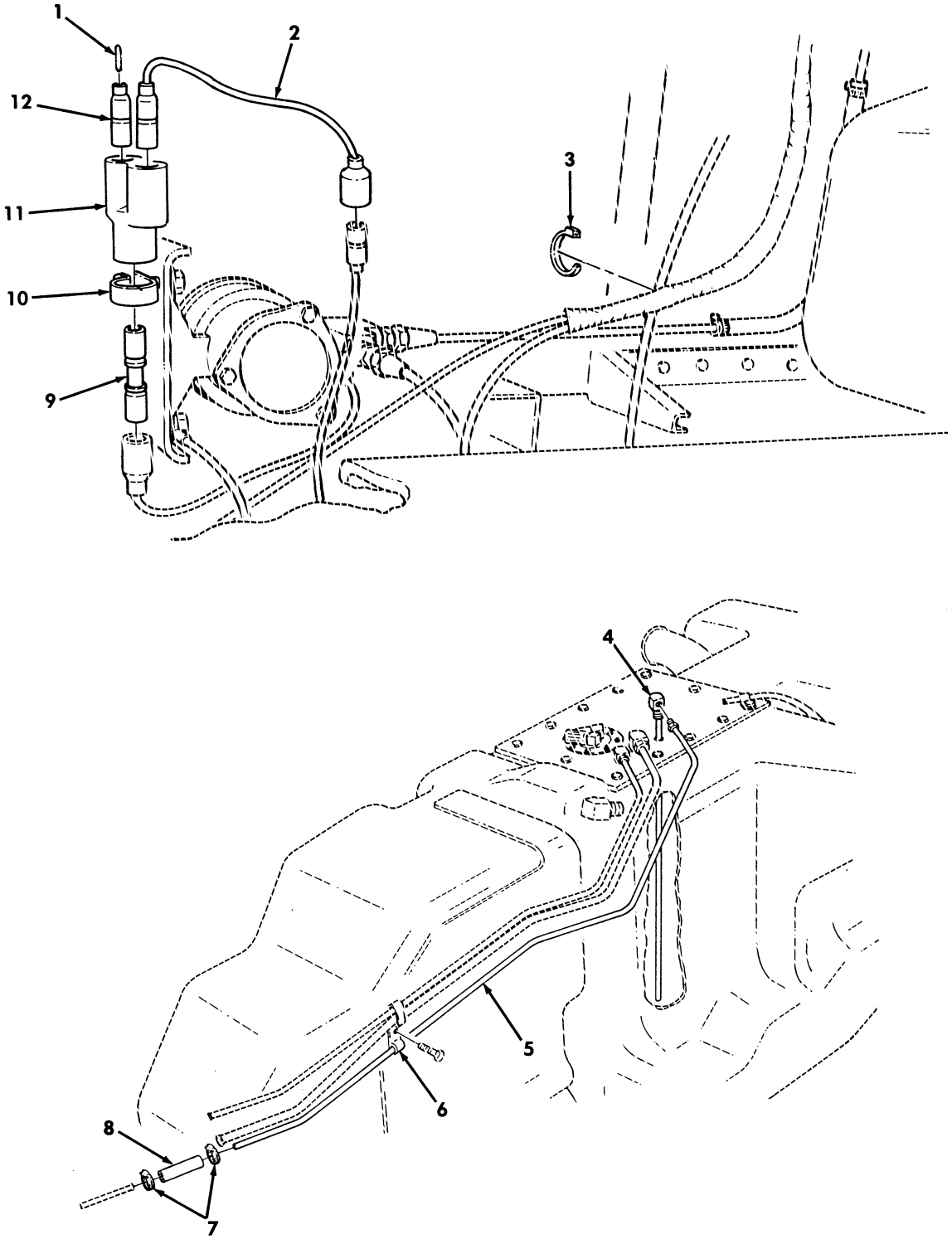

Figure 386. Winterization Kit, Fuel Line and Jumper Cable.

(1) ITEM NO	(2) SMR CODE	(3) NSN	(4) CAGEC	(5) PART NUMBER	(6) DESCRIPTION AND USABLE ON CODES(UOC)	(7) QTY
					GROUP 3303 WINTERIZATION KITS	
					FIG. 386 WINTERIZATION KIT,FUEL LINE AND JUMPER CABLE	
1	PAOZZ	5935002140904	19207	7982907	DUMMY,CONNECTOR,PLU PART OF KIT P/N 5705611..... UOC:A13,A14,H13,H14	1
2	PAOZZ	6150013960906	19207	12342902	LEAD,ELECTRICAL PART OF KIT P/N 5705611..... UOC:A13,A14,H13,H14	1
3	PAOZZ	5975001338687	96906	MS3367-5-0	STRAP,TIEDOWN,ELECT PART OF KIT P/N 5705611..... UOC:A13,A14,H13,H14	1
4	PAOZZ	4710012030615	34623	5578694	TUBE ASSEMBLY,METAL PART OF KIT P/N 5705611..... UOC:A13,A14,H13,H14	1
5	PAOZZ	4710012030607	34623	5588694	TUBE ASSEMBLY,METAL PART OF KIT P/N 5705611..... UOC:A13,A14,H13,H14	1
6	PAOZZ	5340009936207	96906	MS21333-99	CLAMP,LOOP PART OF KIT P/N 5705611. UOC:A13,A14,H13,H14	1
7	PAOZZ	4730011188278	76599	MMF4-SS	CLAMP,HOSE PART OF KIT P/N 57T5611. UOC:A13,A14,H13,H14	2
8	PAOZZ	4720013162538	9C234	12338553-1	HOSE,NONMETALLIC PART OF KIT P/N 5705611..... UOC:A13,A14,H13,H14	1
9	PAOZZ	5935008074109	19207	8741492	ADAPTER,CONNECTOR PART OF KIT P/N 5705611..... UOC:A13,A14,H13,H14	1
10	PAOZZ	5340002827537	96906	MS21333-41	CLAMP,LOOP PART OF KIT P/N 5705611. UOC:A13,A14,H13,H14	1
11	PAOZZ	5935009006281	96906	MS27147-1	ADAPTER,CONNECTOR 3-WAY,PART OF KIT P/N 5705611..... UOC:A13,A14,H13,H14	1
12	PAOZZ	5935008338561	19207	8338561	SHELL,ELECTRICAL CO PART OF KIT P/N 5705611..... UOC:A13,A14,H13,H14	1

END OF FIGURE

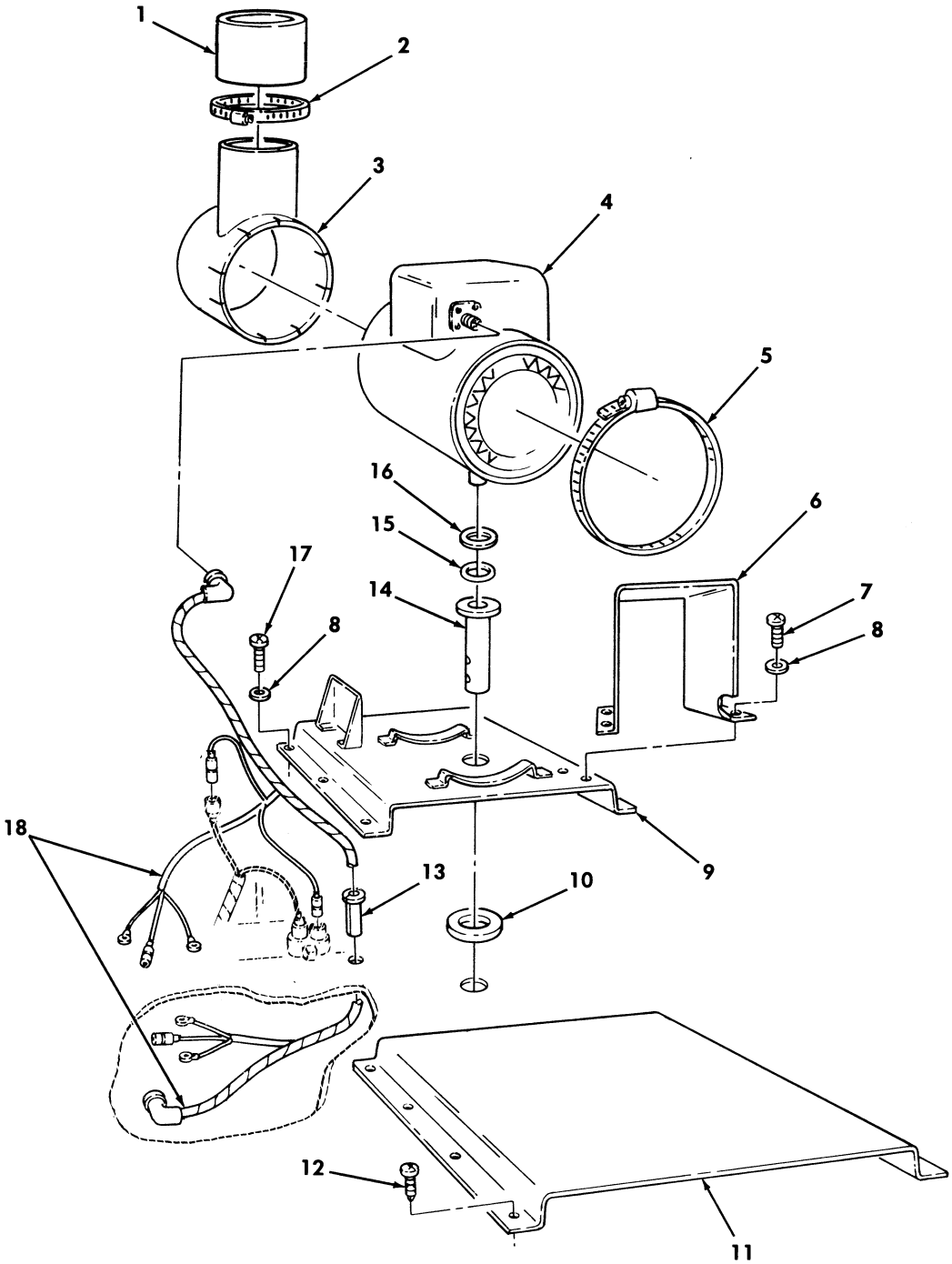

Figure 387. Winterization Kit, Heater and Exhaust Diverter Assembly.

(1) ITEM NO	(2) SMR CODE	(3) NSN	(4) CAGEC	(5) PART NUMBER	(6) DESCRIPTION AND USABLE ON CODES(UOC)	(7) QTY
					GROUP 3303 WINTERIZATION KITS	
					FIG. 387 WINTERIZATION KIT,HEATER AND EXHAUST DIVERTER ASSEMBLY	
1	PFOZZ	5340014507521	19207	12446982	SLEEVE,COUPLING,CLA PART OF KIT P/N 5705611..... UOC:A13,A14,H13,H14	1
2	PAOZZ	4730009086293	96906	MS35842-15	CLAMP,HOSE PART OF KIT P/N 5705611.. UOC:A13,A14,H13,H14	1
3	PFOZZ	4520013170929	19207	12342256	ELBOW,AIR CONDITION PART OF KIT P/N 5705611..... UOC:A13,A14,H13,H14	1
4	PAOFF	2540011943323	19207	11669898	HEATER,VEHICULAR,CO PART OF KIT P/N 5705611..... UOC:A13,A14,H13,H14	1
5	PAOZZ	4730009086294	34623	5578947	CLAMP,HOSE PART OF KIT P/N 5705611.. UOC:A13,A14,H13,H14	2
6	PAOZZ	2540013162597	34623	12342213	SHIELD,HEATER DUCT PART OF KIT P/N 5705611..... UOC:A13,A14,H13,H14	1
7	PAOZZ	5305002678952	80204	B1821BH025F050N	SCREW,CAP,HEXAGON H 1/4-28 X .50, PART OF KIT P/N 5705611..... UOC:A13,A14,H13,H14	4
8	PAOZZ	5310002092946	12204	120380	WASHER,LOCK 1/4,PART OF KIT P/N 5705611..... UOC:A13,A14,H13,H14	10
9	PFOZZ	4520013162585	19207	12342191	BASE,PLATE PART OF KIT P/N 5705611.. UOC:A13,A14,H13,H14	1
10	PAOZZ	5330013197302	19207	12356789	GASKET PART OF KIT P/N 5705611..... UOC:A13,A14,H13,H14	1
11	PAOZZ	5340013208662	19207	11609942	BRACKET,MULTIPLE AN PART OF KIT P/N 5705611..... UOC:A13,A14,H13,H14	1
12	PAOZZ	5325000149926	96906	MS35493-76	SCREW,WOOD #10 X .75,PART OF KIT P/N 5705611..... UOC:A13,A14,H13,H14	8
13	PAOZZ	5325011757442	19207	12300715-1	GROMMET,NONMETALLIC PART OF KIT P/N 5705611..... UOC:A13,A14,H13,H14	1
14	PAOZZ	4710013171044	34623	12342276	TUBE ASSEMBLY,METAL PART OF KIT P/N 5705611..... UOC:A13,A14,H13,H14	1
15	PAOZZ	5331007700242	19207	7700242	O-RING PART OF KIT P/N 5705611..... UOC:A13,A14,H13,H14	1
16	PAOZZ	5310007700243	19207	7700243	WASHER,FLAT PART OF KIT P/N 5705611. UOC:A13,A14,H13,H14	1
17	PAOZZ	5305000680515	80204	B1821BH025F100N	SCREW,CAP,HEXAGON H 1/4-28 X 1.00, PART OF KIT P/N 5705611..... UOC:A13,A14,H13,H14	6
18	PFOZZ	6150013246355	19207	12342193	CABLE ASSEMBLY,SPEC PART OF KIT P/N 5705611..... UOC:A13,A14,H13,H14	1

END OF FIGURE

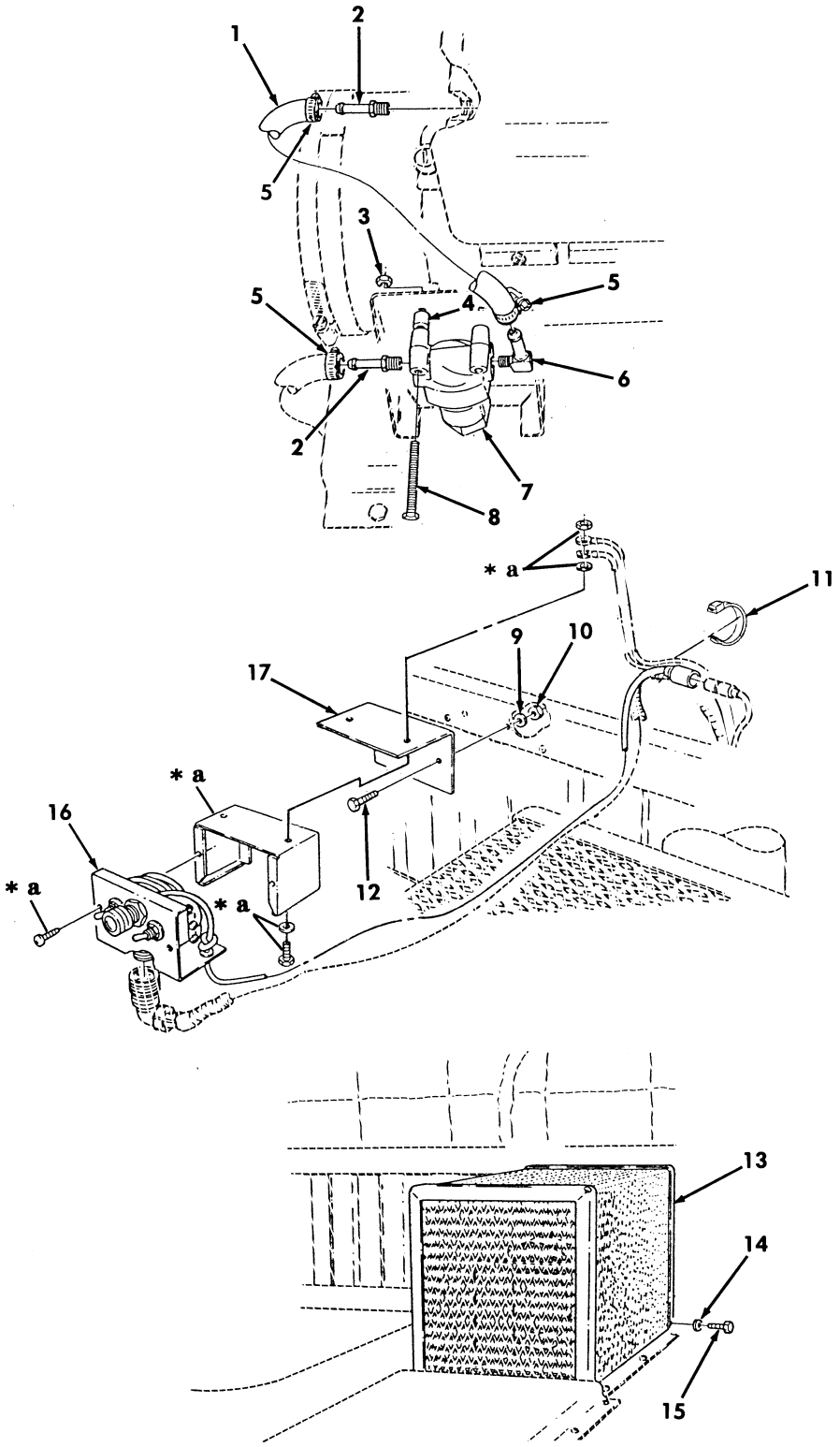

* a PART OF ITEM 16

Figure 388. Winterization Kit, Control Box, Filter, and Cover Assembly.

(1) ITEM NO	(2) SMR CODE	(3) NSN	(4) CAGEC	(5) PART NUMBER	(6) DESCRIPTION AND USABLE ON CODES(UOC)	(7) QTY
					GROUP 3303 WINTERIZATION KITS	
					FIG. 388 WINTERIZATION KIT,CONTROL BOX,FILTER,AND COVER ASSEMBLY	
* 1	MOOZZ		19207	12338553-2	HOSE,NONMETALLIC MAKE FROM HOSE,P/N 9438315,14 INCHES LONG,PART OF KIT P/N 5705611..... UOC:A13,A14,H13,H14	1
2	PAOZZ	4730013575651	81343	5-2 430160C	ADAPTER,STRAIGHT,PI PART OF KIT P/N 5705611..... UOC:A13,A14,H13,H14	2
3	PAOZZ	5310008775797	96906	MS21044N3	NUT,SELF-LOCKING,HE #10-32,PART OF KIT P/N 5705611..... UOC:A13,A14,H13,H14	2
4	PAOZZ	5365013182066	19207	8359764	SPACER,SLEEVE PART OF KIT P/N 5705611..... UOC:A13,A14,H13,H14	2
5	PAOZZ	4730002782523	88907	B54-32780	CLAMP,HOSE PART OF KIT P/N 5705611.. UOC:A13,A14,H13,H14	3
6	PAOZZ	4730013486231	81343	5-2 430260	ELBOW PART OF KIT P/N 5705611..... UOC:A13,A14,H13,H14	1
* 7	PAOZZ	2910014458097	58536	A52472-1	FILTER ELEMENT,FLUI PART OF KIT P/N 5705611 UOC:A13,A14,H13,H14	1
8	PAOZZ	5305011204363	54132	9415779	SCREW,CAP,HEXAGON H #10-32 X 2.00 PART OF KIT P/N 5705611..... UOC:A13,A14,H13,H14	2
9	PAOZZ	5310008094058	96906	MS27183-10	WASHER,FLAT 1/4,PART OF KIT P/N 5705611..... UOC:A13,A14,H13,H14	2
10	PAOZZ	5310009359022	96906	MS51943-32	NUT,SELF-LOCKING,HE 1/4-28,PART OF KIT P/N 5705611..... UOC:A13,A14,H13,H14	2
11	PAOZZ	5975001338687	96906	MS3367-5-0	STRAP,TIEDOWN,ELECT PART OF KIT P/N 5705611..... UOC:A13,A14,H13,H14	1
12	PAOZZ	5305002678953	80204	B1821BH025F063N	SCREW,CAP,HEXAGON H 1/4-28 X .625 PART OF KIT P/N 5705611..... UOC:A13,A14,H13,H14	2
13	PAOZZ	2540013208918	19207	12342189	SHIELD,HEATER DUCT PART OF KIT P/N 5705611..... UOC:A13,A14,H13,H14	1
14	PAOZZ	5310005825965	96906	MS35338-44	WASHER,LOCK 1/4,PART OF KIT P/N 5705611..... UOC:A13,A14,H13,H14	4
15	PAOZZ	5306000680513	80204	B1821BH025F075N	BOLT,MACHINE 1/4-28 X .75,PART OF KIT P/N 5705611..... UOC:A13,A14,H13,H14	4
16	PAOZZ	2540011256154	19207	11669705	CONTROL BOX PART OF KIT P/N 5705611. UOC:A13,A14,H13,H14	1
17	PFOZZ	5340013172675	19207	12342260	BRACKET,ANGLE PART PF KIT P/N 5705611..... UOC:A13,A14,H13,H14	1

END OF FIGURE

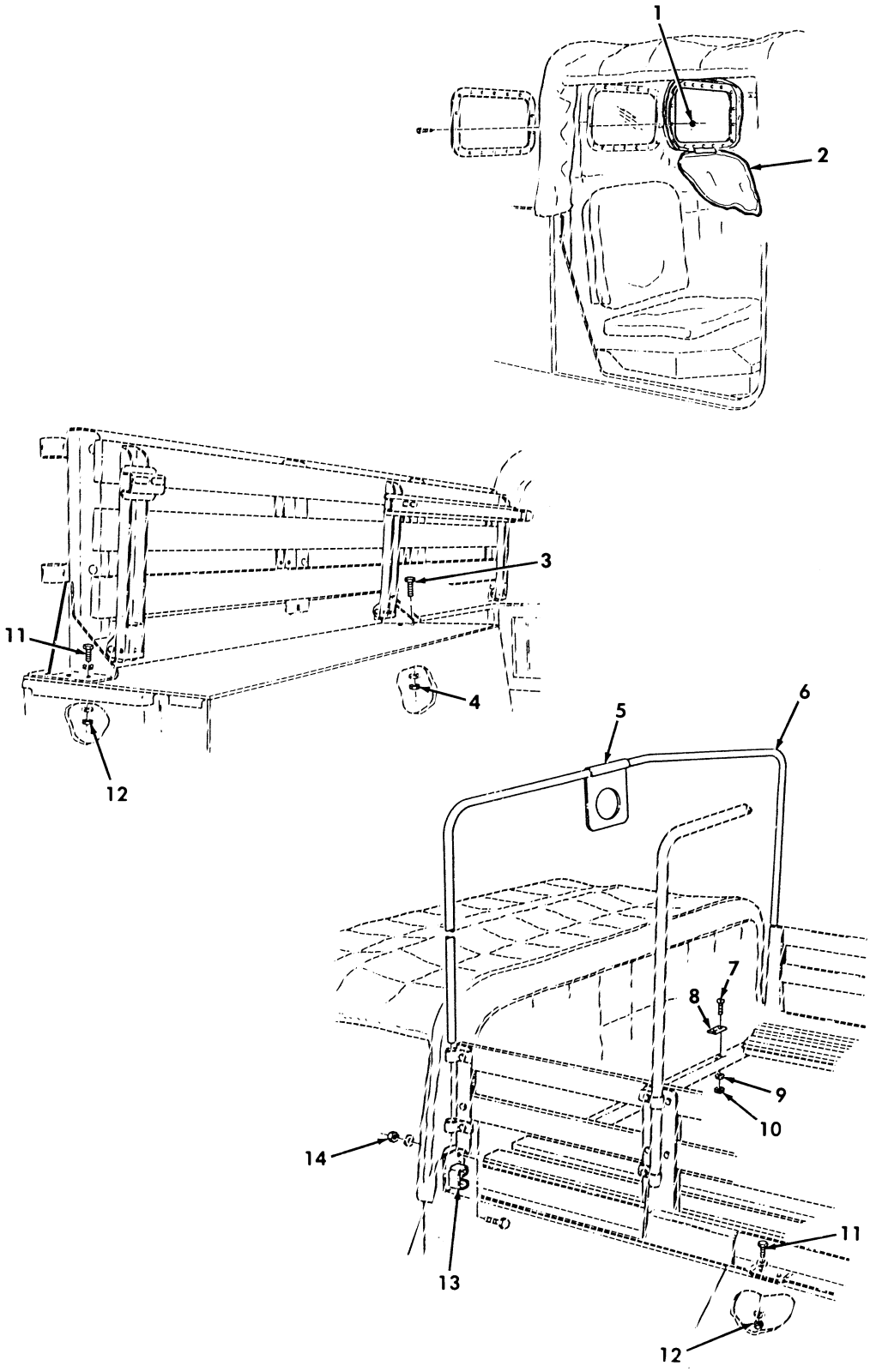

Figure 389. Seat Support Assemblies and Mounting Hardware.

(1) ITEM NO	(2) SMR CODE	(3) NSN	(4) CAGEC	(5) PART NUMBER	(6) DESCRIPTION AND USABLE ON CODES(UOC)	(7) QTY
					GROUP 3303 WINTERIZATION KITS	
					FIG. 389 SEAT SUPPORT ASSEMBLIES AND MOUNTING HARDWARE	
1	PAOZZ	5310009416019	96906	MS21083N08	NUT,SELF-LOCKING,HE #10-24 PART OF KIT P/N 5705611..... UOC:A13,A14,H13,H14	36
2	PAOZZ	2540001042889	19207	11609693-1	CURTAIN,VEHICULAR,B PART OF KIT P/N 5705611..... UOC:A13,A14,H13,H14	2
3	PFOZZ	5305000712056	80204	B1821BH044C175N	SCREW,CAP,HEXAGON H 7/16-14 X 1.75 PART OF KIT P/N 5705611..... UOC:A13,A14,H13,H14	4
4	PAOZZ	5310013185237	24617	9419456	NUT,SELF-LOCKING,HE 7/16-14,PART OF KIT P/N 5705611..... UOC:A13,A14,H13,H14	4
5	PFOZZ	5340013177501	19207	12342266	BRACKET,MOUNTING PART OF KIT P/N 5705611..... UOC:A13,A14,H13,H14	1
6	PFOZZ	2540011996760	34623	5581331	BOW,VEHICULAR TOP PART OF KIT P/N 5705611..... UOC:A13,A14,H13,H14	3
7	PFOZZ	5305009932457	96906	MS35207-284	SCREW,MACHINE 1/4-28 X 1.25,PART OF KIT P/N 5705611..... UOC:A13,A14,H13,H14	4
8	PAOZZ	2510013160216	19207	12342166	BLOCK,PLYWOOD PART OF KIT P/N 5705611..... UOC:A13,A14,H13,H14	2
9	PFOZZ	5310008094058	96906	MS27183-10	WASHER,FLAT 1/4,PART OF KIT P/N 5705611..... UOC:A13,A14,H13,H14	4
10	PAOZZ	5310004838791	96906	MS17829-4F	NUT,SELF-LOCKING,HE 1/4-28,PART OF KIT P/N 5705611..... UOC:A13,A14,H13,H14	4
11	PAOZZ	5305000712509	80204	B1821BH025C150N	SCREW,CAP,HEXAGON H 1/4-20 X 1.50 PART OF KIT P/N 5705611..... UOC:A13,A14,H13,H14	18
12	PAOZZ	5310010666759	72962	21NE-040	NUT,SELF-LOCKING,HE 1/4-20,PART OF KIT P/N 5705611..... UOC:A13,A14,H13,H14	18
13	PAOZZ	2590013170534	34623	12342175	BRACKET,VEHICULAR C R.H.,PART OF KIT P/N 5705611..... UOC:A13,A14,H13,H14	1
13	PAOZZ	2590013170535	34623	12342264	BRACKET,VEHICULAR C L.H.,PART OF KIT P/N 5705611..... UOC:A13,A14,H13,H14	1
14	PAOZZ	5310002416658	96906	MS51943-34	NUT,SELF-LOCKING,HE 5/16-24,PART OF KIT P/N 5705611..... UOC:A13,A14,H13,H14	6

END OF FIGURE

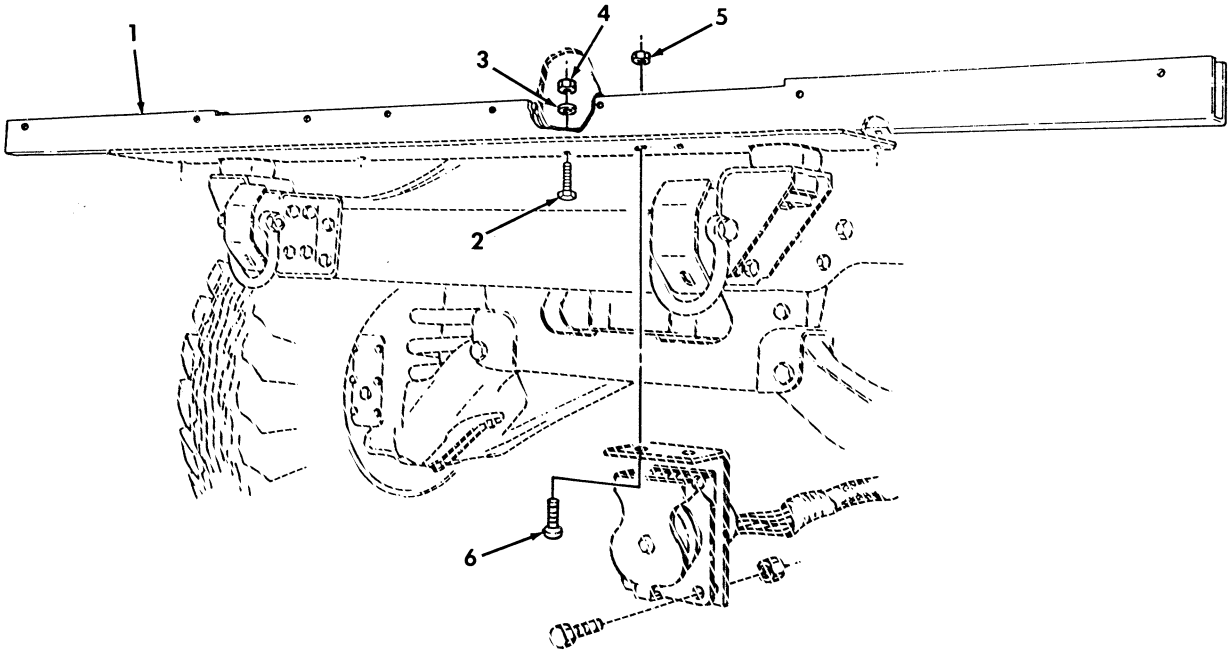

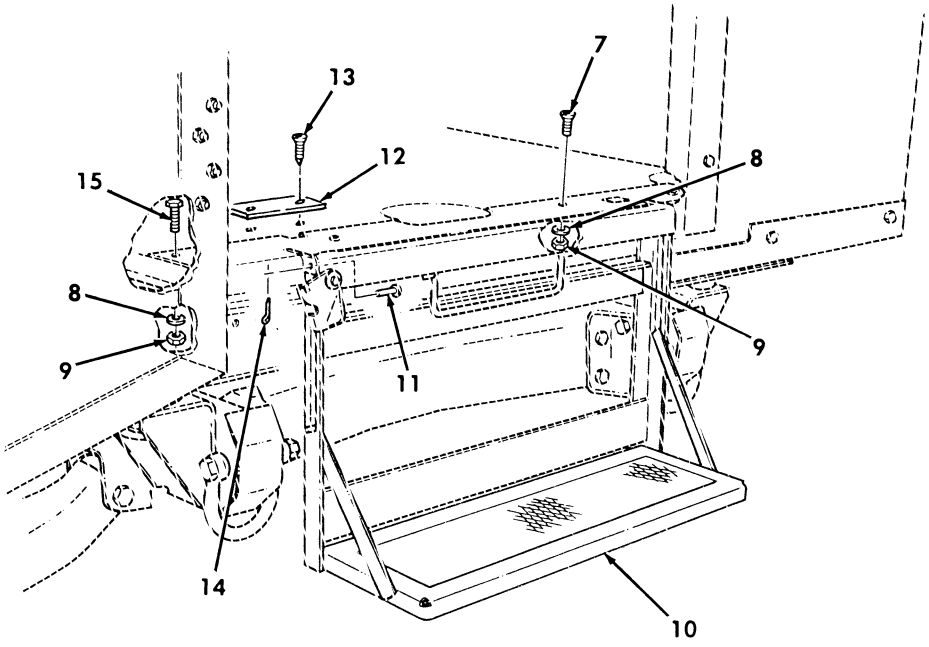

Figure 390. Step Assembly, Support Assembly, and Mounting Hardware.

(1) ITEM NO	(2) SMR CODE	(3) NSN	(4) CAGEC	(5) PART NUMBER	(6) DESCRIPTION AND USABLE ON CODES(UOC)	(7) QTY
					GROUP 3303 WINTERIZATION KITS	
					FIG. 390 STEP ASSEMBLY,SUPPORT ASSEMBLY,AND MOUNTING HARDWARE	
1	PFOZZ	2540013170820	34623	12342332	SUPPORT ASSEMBLY,BO PART OF KIT P/N 5705611..... UOC:A13,A14,H13,H14	1
2	PAOZZ	5305007195221	80204	B1821BH050F150N	SCREW,CAP,HEXAGON H 1/2-20 X 1.50, PART OF KIT P/N 5705611..... UOC:A13,A14,H13,H14	4
3	PAOZZ	5310008095998	96906	MS27183-18	WASHER,FLAT 1/2 PART OF KIT P/N 5705611..... UOC:A13,A14,H13,H14	4
4	PAOZZ	5310007749073	72582	190171	NUT,SELF-LOCKING,CA 1/2-20 PART OF KIT P/N 5705611..... UOC:A13,A14,H13,H14	4
5	PAOZZ	5310008140673	96906	MS51943-33	NUT,SELF-LOCKING,HE 5/16-18 PART OF KIT P/N 5705611..... UOC:A13,A14,H13,H14	2
6	PAOZZ	5306002264829	80204	B1821BH031C125N	BOLT,MACHINE 5/16-18 X 1.25 PART OF KIT P/N 5705611..... UOC:A13,A14,H13,H14	2
7	PAOZZ	5305009017250	96906	MS24693-S350	SCREW,MACHINE 3/8-24 X 1.25,PART OF KIT P/N 5705611..... UOC:A13,A14,H13,H14	2
8	PAOZZ	5310001670821	61465	M2025103	WASHER,FLAT 3/8,PART OF KIT P/N 5705611..... UOC:A13,A14,H13,H14	4
9	PAOZZ	5310010583353	72582	192481	NUT,SELF-LOCKING,HE 3/8-24,PART OF KIT P/N 5705611..... UOC:A13,A14,H13,H14	4
10	PAOZZ	2540013171024	34623	12342301	LADDER,VEHICLE BOAR PART OF KIT P/N 5705611..... UOC:A13,A14,H13,H14	1
11	PAOZZ	5315008903461	96906	MS20392-6C17	PIN,STRAIGHT,HEADER 7/16 X .531, PART OF KIT P/N 5705611..... UOC:A13,A14,H13,H14	2
12	PAOZZ	5340013942409	19207	12342903	PLATE,MOUNTING PART OF KIT P/N 5705611..... UOC:A13,A14,H13,H14	1
13	PAOZZ	5305009026643	96906	MS35492-76	SCREW,WOOD #10 X .75,PART OF KIT P/N 5705611..... UOC:A13,A14,H13,H14	2
14	PAOZZ	5315008423044	96906	MS24665-283	PIN,COTTER 1/16,PART OF KIT P/N 5705611..... UOC:A13,A14,H13,H14	2
15	PAOZZ	5305002693242	80204	B1821BH038F200N	SCREW,CAP,HEXAGON H 3/8-24 X 2.00, PART OF KIT P/N 5705611..... UOC:A13,A14,H13,H14	2

END OF FIGURE

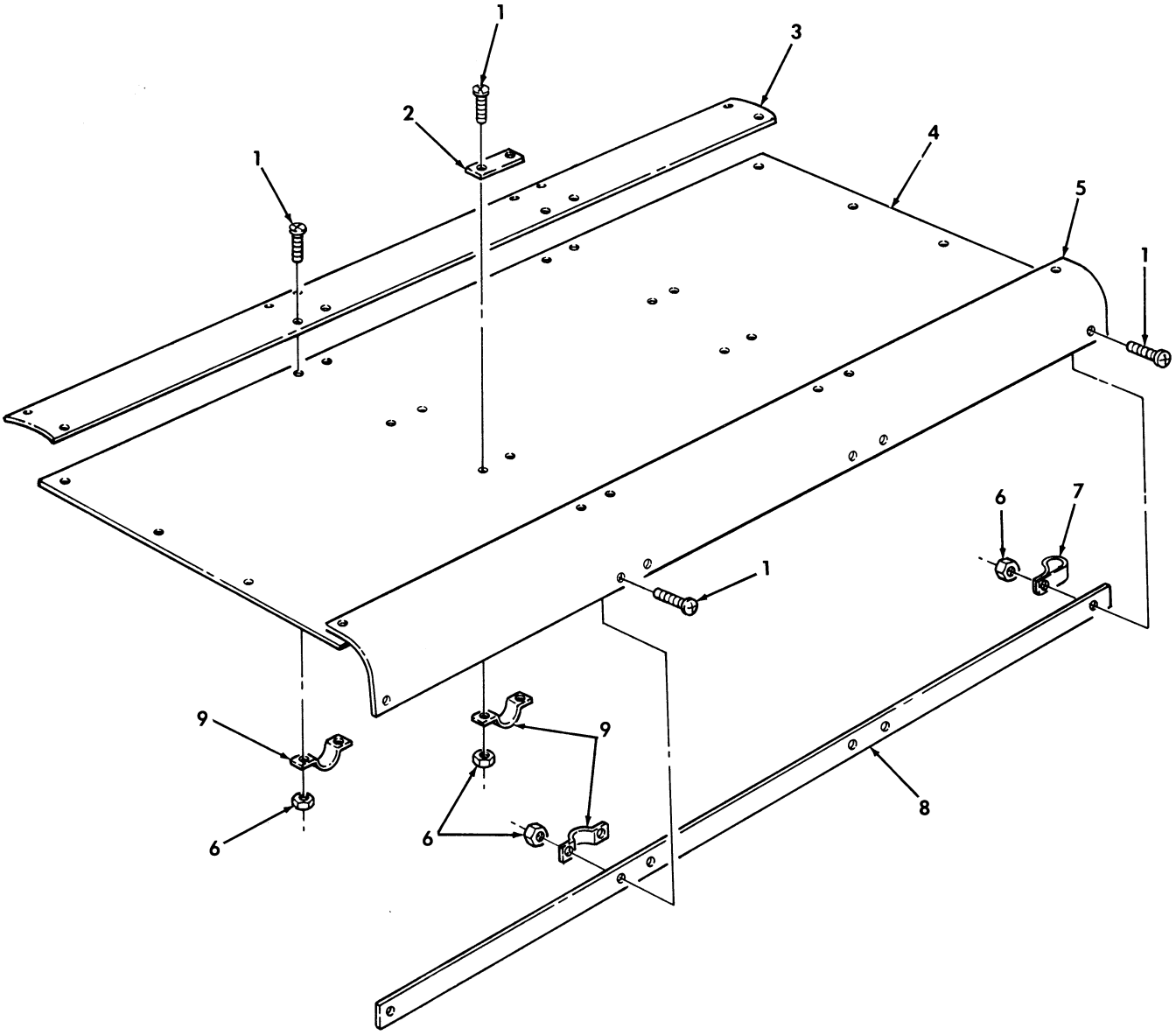

Figure 391. Top Plate Support and Attaching Hardware.

(1) ITEM NO	(2) SMR CODE	(3) NSN	(4) CAGEC	(5) PART NUMBER	(6) DESCRIPTION AND USABLE ON CODES(UOC)	(7) QTY
					GROUP 3303 WINTERIZATION KITS	
					FIG. 391 TOP PLATE SUPPORT AND ATTACHING HARDWARE	
1	PAOZZ	5305009932460	96906	MS35207-282	SCREW,MACHINE 1/4-28 X .875 PART OF KIT P/N 5705611..... UOC:A13,A14,H13,H14	50
2	PAOZZ	5340013182040	19207	12342218	PLATE,MENDING PART OF KIT P/N 5705611..... UOC:A13,A14,H13,H14	8
3	KFFZZ		19207	12342226	PLATE,SEAM PART OF KIT P/N 5705611.. UOC:A13,A14,H13,H14	1
4	KFFZZ		19207	12342220-1	SUPPORT PART OF KIT P/N 5705611..... UOC:A13,A14,H13,H14	1
5	KFFZZ		19207	12342221	SUPPORT PART OF KIT P/N 5705611..... UOC:A13,A14,H13,H14	1
6	PAOZZ	5310013174022	24617	9413553	NUT,PLAIN,EXTENDED 1/4-28 PART OF KIT P/N 5705611..... UOC:A13,A14,H13,H14	50
7	PAOZZ	5340013179086	19207	12342234	CLAMP,LOOP PART OF KIT P/N 5705611.. UOC:A13,A14,H13,H14	10
8	KFFZZ		19207	12342220-2	SUPPORT PART OF KIT P/N 5705611..... UOC:A13,A14,H13,H14	1
9	PAOZZ	5340013199426	19207	12342235	STRAP,RETAINING,PART OF KIT P/N 5705611..... UOC:A13,A14,H13,H14	20

END OF FIGURE

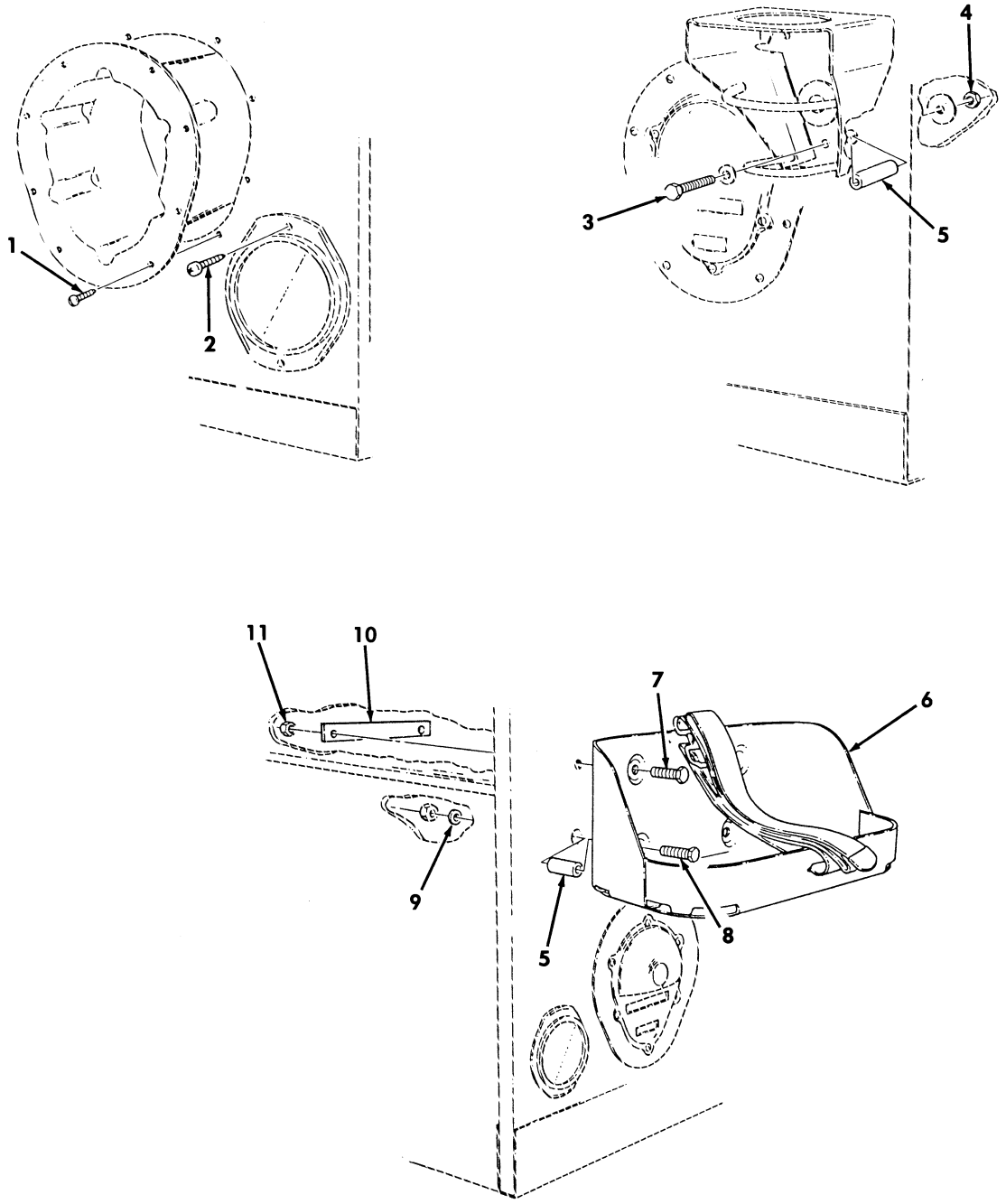

Figure 392. Fuel Can Bracket, Antenna Mounting Bracket, and Composite Light Housing Mounting Hardware.

(1) ITEM NO	(2) SMR CODE	(3) NSN	(4) CAGEC	(5) PART NUMBER	(6) DESCRIPTION AND USABLE ON CODES(UOC)	(7) QTY
					GROUP 3303 WINTERIZATION KITS	
					FIG. 392 FUEL CAN BRACKET,ANTENNA MOUNTING BRACKET,AND COMPOSITE LIGHT HOUSING MOUNTING HARDWARE	
1	PAOZZ	5305000149926	96906	MS35493-76	SCREW,WOOD #10 X .875,PART OF KIT 5705611..... UOC:A13,A14,H13,H14	16
2	PAOZZ	5305013159512	96906	MS35495-124	SCREW,WOOD #14 X .75,PART OF KIT P/N 5705611..... UOC:A13,A14,H13,H14	4
3	PAOZZ	5306002259097	96906	MS90726-42	BOLT,MACHINE 5/16-24 X 2.50,PART OF KIT P/N 5705611..... UOC:A13,A14,H13,H14	3
4	PAOZZ	5310000880553	24617	190139	NUT,SELF-LOCKING,HE 5/16-24,PART OF KIT P/N 5705611..... UOC:A13,A14,H13,H14	3
5	PAOZZ	5365013168985	19207	12342237	SPACER,SLEEVE PART OF KIT P/N 5705611..... UOC:A13,A14,H13,H14	5
6	PAOZZ	2590004736331	07860	C21452	BRACKET ASSEMBLY,LI PART OF KIT P/N 5705611..... UOC:A13,A14,H13,H14	1
7	PAOZZ	5305009146131	96906	MS18153-63	SCREW,CAP,HEXAGON H 3/8-24 X 1.75, PART OF KIT P/N 5705611..... UOC:A13,A14,H13,H14	2
8	PAOZZ	5305002692811	96906	MS90726-67	SCREW,CAP,HEXAGON H 3/8-24 X 2.50, PART OF KIT P/N 5705611..... UOC:A13,A14,H13,H14	2
9	PAOZZ	5310000806004	96906	MS27183-14	WASHER,FLAT 3/8,PART OF KIT P/N 5705611..... UOC:A13,A14,H13,H14	2
10	PAOZZ	5340013182041	19207	12342219	PLATE,MENDING PART OF KIT P/N 5705611..... UOC:A13,A14,H13,H14	1
11	PAOZZ	5310010583353	72582	192481	NUT,SELF-LOCKING,HE 3/8-24,PART OF KIT P/N 5705611..... UOC:A13,A14,H13,H14	4

END OF FIGURE

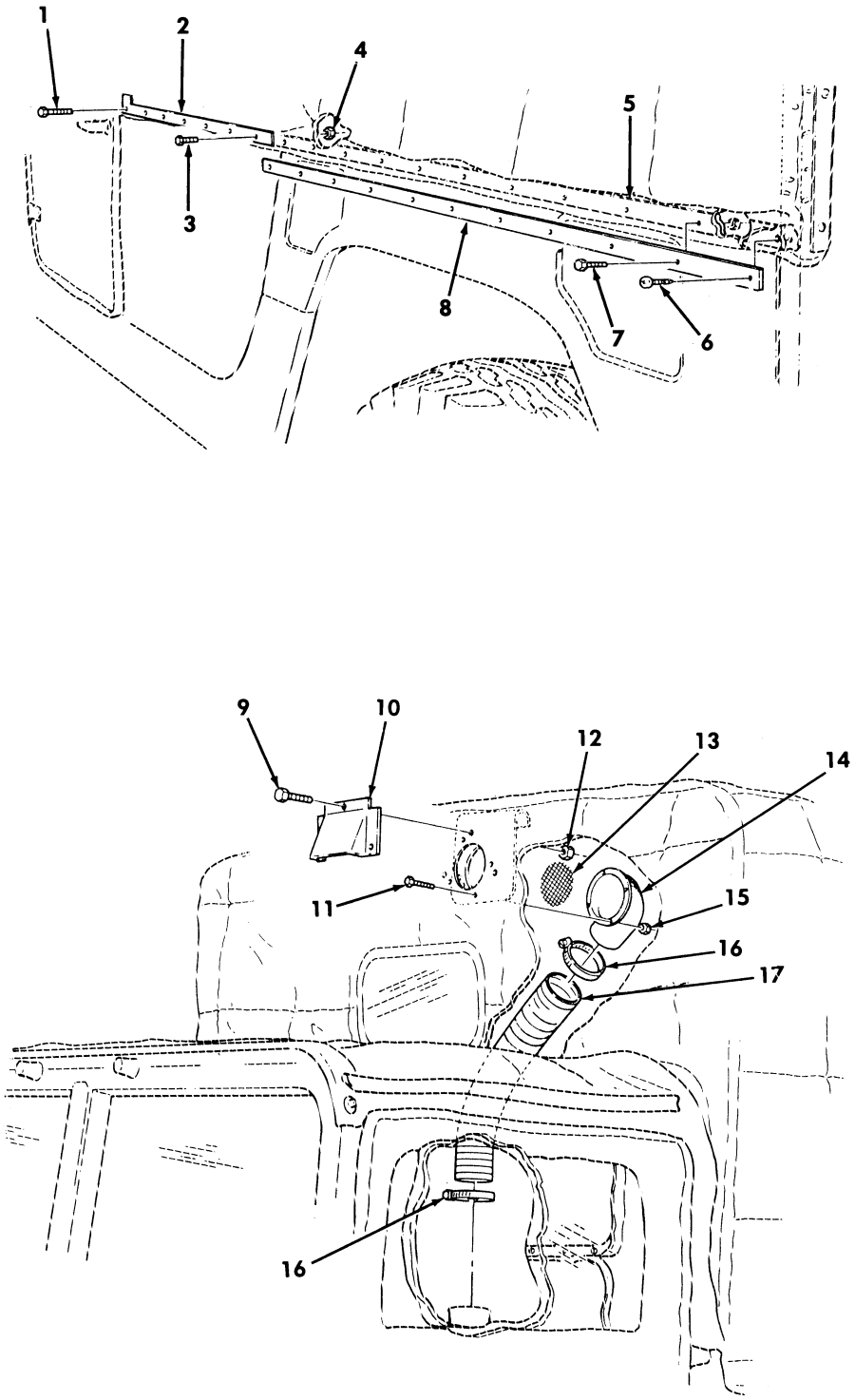

Figure 393. Mounting Plates and Ventilator Exhaust Ducting.

(1) ITEM NO	(2) SMR CODE	(3) NSN	(4) CAGEC	(5) PART NUMBER	(6) DESCRIPTION AND USABLE ON CODES(UOC)	(7) QTY
					GROUP 3303 WINTERIZATION KITS	
					FIG. 393 MOUNTING PLATES AND VENTILATOR EXHAUST DUCTING	
1	PAOZZ	5305000712237	96906	MS90725-14	SCREW,CAP,HEXAGON H 1/4-20 X 2.00, PART OF KIT P/N 5705611..... UOC:A13,A14,H13,H14	1
2	PAOZZ	5340013202060	19207	12342201	PLATE,MOUNTING PART OF KIT P/N 5705611..... UOC:A13,A14,H13,H14	1
3	PAOZZ	5305000712056	80204	B1821BH044C175N	SCREW,CAP,HEXAGON H 1/4-20 X 1.75, PART OF KIT P/N 5705611..... UOC:A13,A14,H13,H14	6
4	PAOZZ	5310010128962	24617	9416918	NUT,PLAIN,EXTENDED 1/4-20,PART OF KIT P/N 5705611..... UOC:A13,A14,H13,H14	17
5	PAOZZ	5330013175392	19207	12342248	RUBBER,STRIP PART OF KIT P/N 5705611 UOC:A13,A14,H13,H14	1
6	PAOZZ	5305013170409	96906	MS35495-127	SCREW,WOOD #14 X 1.25,PART OF KIT P/N 5705611..... UOC:A13,A14,H13,H14	1
7	PAOZZ	5305000680502	96906	MS90725-6	SCREW,CAP,HEXAGON H 1/4-20 X .75, PART OF KIT P/N 5705611..... UOC:A13,A14,H13,H14	10
8	PAOZZ	2590013174854	19207	12342173	MOLDING,METAL PART OF KIT P/N 5705611..... UOC:A13,A14,H13,H14	1
9	PAOZZ	5305000680515	80204	B1821BH025F100N	SCREW,CAP,HEXAGON H 1/4-28 X 1.00, PART OF KIT P/N 5705611..... UOC:A13,A14,H13,H14	3
10	PFOZZ	2540013162588	34623	7390378	VENTILATOR,AIR,CIRC PART OF KIT P/N 5705611..... UOC:A13,A14,H13,H14	1
11	PAOZZ	5305009896265	96906	MS35207-262	SCREW,MACHINE #10-32 X .375,PART OF KIT P/N 5705611..... UOC:A13,A14,H13,H14	4
12	PAOZZ	5310009359022	96906	MS51943-32	NUT,SELF-LOCKING,HE 1/4-28,PART OF KIT P/N 5705611..... UOC:A13,A14,H13,H14	3
13	PAOZZ	4730005671630	78358	484487	STRAINER ELEMENT,SE PART OF KIT P/N 5705611..... UOC:A13,A14,H13,H14	1
14	PFOZZ	2540001778108	19207	7951057	ADAPTER,VEHICLE STO PART OF KIT P/N 5705611..... UOC:A13,A14,H13,H14	1
15	PAOZZ	5310008775797	96906	MS21044N3	NUT,SELF-LOCKING,HE #10-32,PART OF KIT P/N 5705611..... UOC:A13,A14,H13,H14	4
16	PAOZZ	4730009086293	66295	60HS	CLAMP.HOSE PART OF KIT P/N 5705611.. UOC:A13,A14,H13,H14	2
17	PAOZZ	4720014764656	19207	12342261-1	HOSE,AIR DUCT 44 INCHES LONG PART OF KIT P/N 5705611..... UOC:A13,A14,H13,H14	1

END OF FIGURE

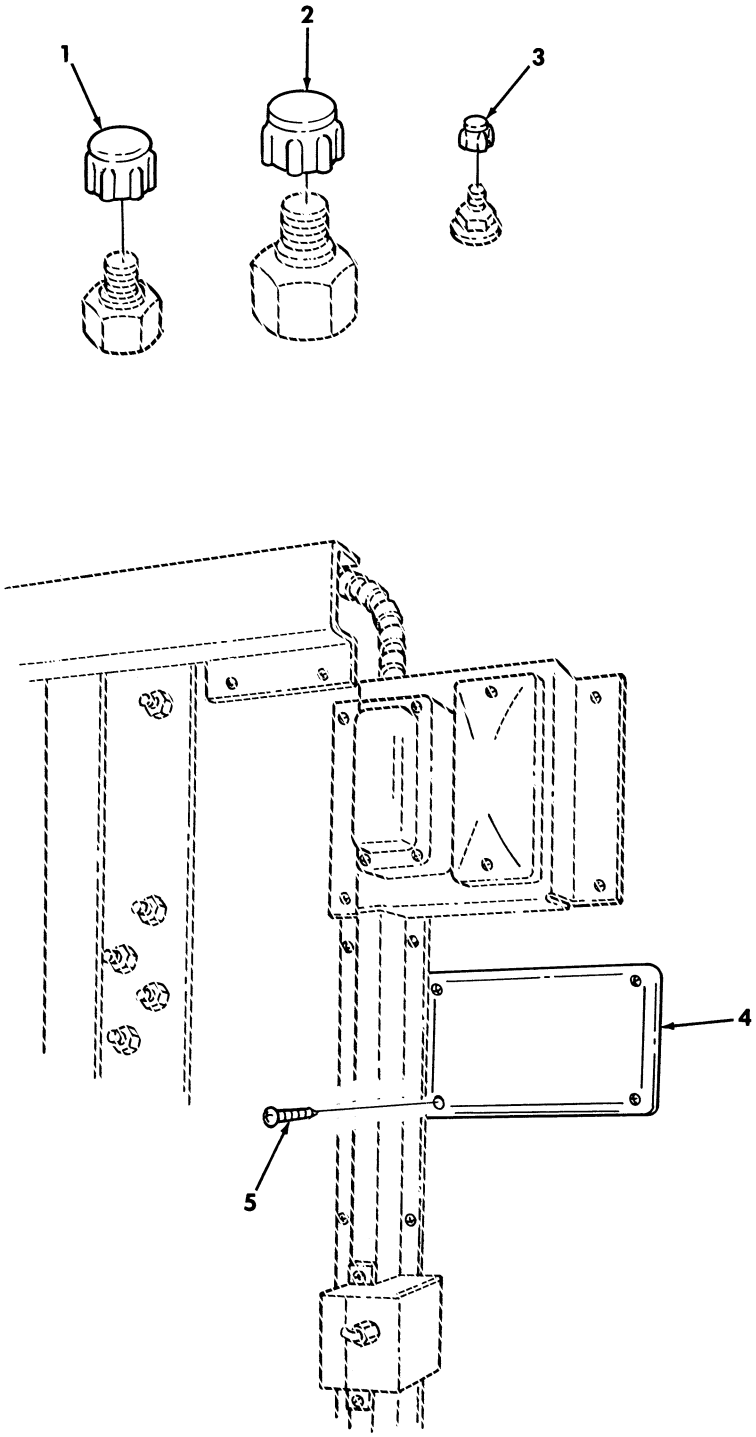

Figure 394. Screw Caps and Winterization Instruction Plate.

(1) ITEM NO	(2) SMR CODE	(3) NSN	(4) CAGEC	(5) PART NUMBER	(6) DESCRIPTION AND USABLE ON CODES(UOC)	(7) QTY
					GROUP 3303 WINTERIZATION KITS	
					FIG. 394 SCREW CAPS AND WINTERIZATION INSTRUCTION PLATE	
1	PAOZZ	5340007274774	81349	M5501/11-F5	CAP,PROTECTIVE,DUST PART OF KIT P/N 5705611..... UOC:A13,A14,H13,H14	23
2	PAOZZ	5340011679314	81349	M5501/11-F7	CAP,PROTECTIVE,DUST PART OF KIT P/N 5705611..... UOC:A13,A14,H13,H14	2
3	PAOZZ	5340011744894	81349	M5501/11-F1	CAP.PROTECTIVE,DUST PART OF KIT P/N 5705611..... UOC:A13,A14,H13,H14	52
4	PFOZZ	9905010327002	19207	10896651	PLATE,INSTRUCTION PART OF KIT P/N 5705611..... UOC:A13,A14,H13,H14	1
5	PAOZZ	5305009012099	96906	MS35493-51	SCREW,WOOD #8 X .50,PART OF KIT P/N 5705611..... UOC:A13,A14,H13,H14	4

END OF FIGURE

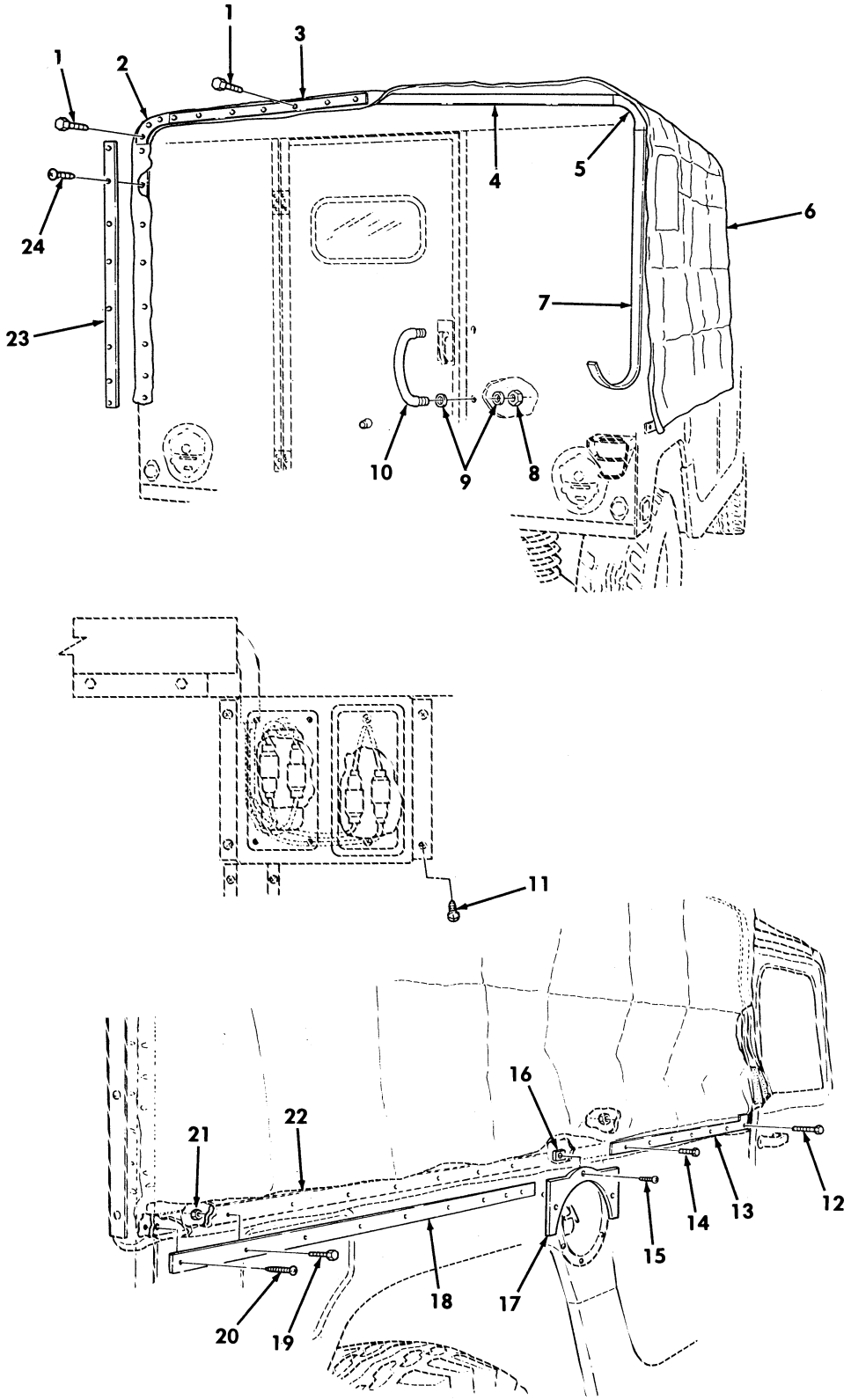

Figure 395. Top Cover Assembly and Mounting Hardware.

(1) ITEM NO	(2) SMR CODE	(3) NSN	(4) CAGEC	(5) PART NUMBER	(6) DESCRIPTION AND USABLE ON CODES(UOC)	(7) QTY
					GROUP 3303 WINTERIZATION KITS	
					FIG. 395 TOP COVER ASSEMBLY AND MOUNTING HARDWARE	
1	PAOZZ	5305004324253	96906	MS51861-67	SCREW,TAPPING 1/4-14 X .75,PART OF KIT P/N 5705611..... UOC:A13,A14,H13,H14	20
2	PAOZZ	2590013173952	19207	12342195	MOLDING,METAL PART OF KIT P/N 5705611..... UOC:A13,A14,H13,H14	2
3	PAOZZ	2590013178292	19207	12342216	MOLDING,METAL PART OF KIT P/N 5705611..... UOC:A13,A14,H13,H14	2
4	PAOZZ	5330013175393	19207	12342345	RUBBER STRIP PART OF KIT P/N 5705611 UOC:A13,A14,H13,H14	2
5	PAOZZ	5330013181998	19207	12342343	SEAL,NONMETALLIC ST PART OF KIT P/N 5705611..... UOC:A13,A14,H13,H14	2
6	PAOFF	2540013153762	19207	12342187	COVER,FITTED,VEHICU PART OF KIT P/N 5705611..... UOC:A13,A14,H13,H14	1
7	PAOZZ	5330013189780	19207	12342344	RUBBER,STRIP PART OF KIT P/N 5705611 UOC:A13,A14,H13,H14	2
8	PAOZZ	5310013178164	24617	272739	NUT,SELF-LOCKING,HE 5/8-18,PART OF KIT P/N 5705611..... UOC:A13,A14,H13,H14	2
9	PAOZZ	5310004986675	10001	1788116	WASHER,FLAT 5/8,PART OF KIT P/N 5705611..... UOC:A13,A14,H13,H14	4
10	PAOZZ	2540013174289	34623	11602903	HANDLE,DOOR PART OF KIT P/N 5705611 UOC:A13,A14,H13,H14	1
11	PAOZZ	5305000567879	96906	MS35493-74	SCREW,WOOD #10 X .50,PART OF KIT P/N 5705611..... UOC:A13,A14,H13,H14	8
12	PAOZZ	5305000712237	96906	MS90725-14	SCREW,CAP,HEXAGON H 1/4-20 X 2.00, PART OF KIT P/N 5705611..... UOC:A13,A14,H13,H14	1
13	PAOZZ	5340013202060	19207	12342201	PLATE,MOUNTING PART OF KIT P/N 5705611..... UOC:A13,A14,H13,H14	1
14	PAOZZ	5305000712056	80204	B1821BH044C175N	SCREW,CAP,HEXAGON H 7/16-14 X 1.75 PART OF KIT P/N 5705611..... UOC:A13,A14,H13,H14	6
15	PAOZZ	5305013159524	96906	MS51850-69	SCREW,TAPPING #10 X 1.25,PART OF KIT P/N 5705611..... UOC:A13,A14,H13,H14	3
16	PAOZZ	5310011101145	96906	MS90724-39	NUT,SHEET SPRING #10-39,PART OF KIT P/N 5705611..... UOC:A13,A14,H13,H14	3
17	PAOZZ	2510013199384	19207	12342258	FRAME SECTION,STRUC PART OF KIT P/N 5705611..... UOC:A13,A14,H13,H14	1

(1) ITEM NO	(2) SMR CODE	(3) NSN	(4) CAGEC	(5) PART NUMBER	(6) DESCRIPTION AND USABLE ON CODES(UOC)	(7) QTY
18	PAOZZ	2590013174855	19207	12342185	MOLDING,METAL PART OF KIT P/N 5705611..... UOC:A13,A14,H13,H14	1
19	PAOZZ	5305000680502	96906	MS90725-6	SCREW,CAP,HEXAGON H 1/4-20 X .75 PART OF KIT P/N 5705611..... UOC:A13,A14,H13,H14	8
20	PAOZZ	5305013170409	96906	MS35489-127	SCREW,WOOD #14 X 1.25,PART OF KIT P/N 5705611..... UOC:A13,A14,H13,H14	1
21	PAOZZ	5310010128962	24617	9416918	NUT,PLAIN,EXTENDED 1/4-20,PART OF KIT P/N 5705611..... UOC:A13,A14,H13,H14	15
22	PAOZZ	5330013175392	19207	12342248	RUBBER STRIP PART OF KIT P/N 5705611 UOC:A13,A14,H13,H14	1
23	PAOZZ	2590013177561	34623	12342215	MOLDING,METAL PART OF KIT P/N 5705611..... UOC:A13,A14,H13,H14	2
24	PAOZZ	5305013159882	96906	MS35495-126	SCREW,WOOD #14 X 1.00,PART OF KIT P/N 5705611..... UOC:A13,A14,H13,H14	24

END OF FIGURE

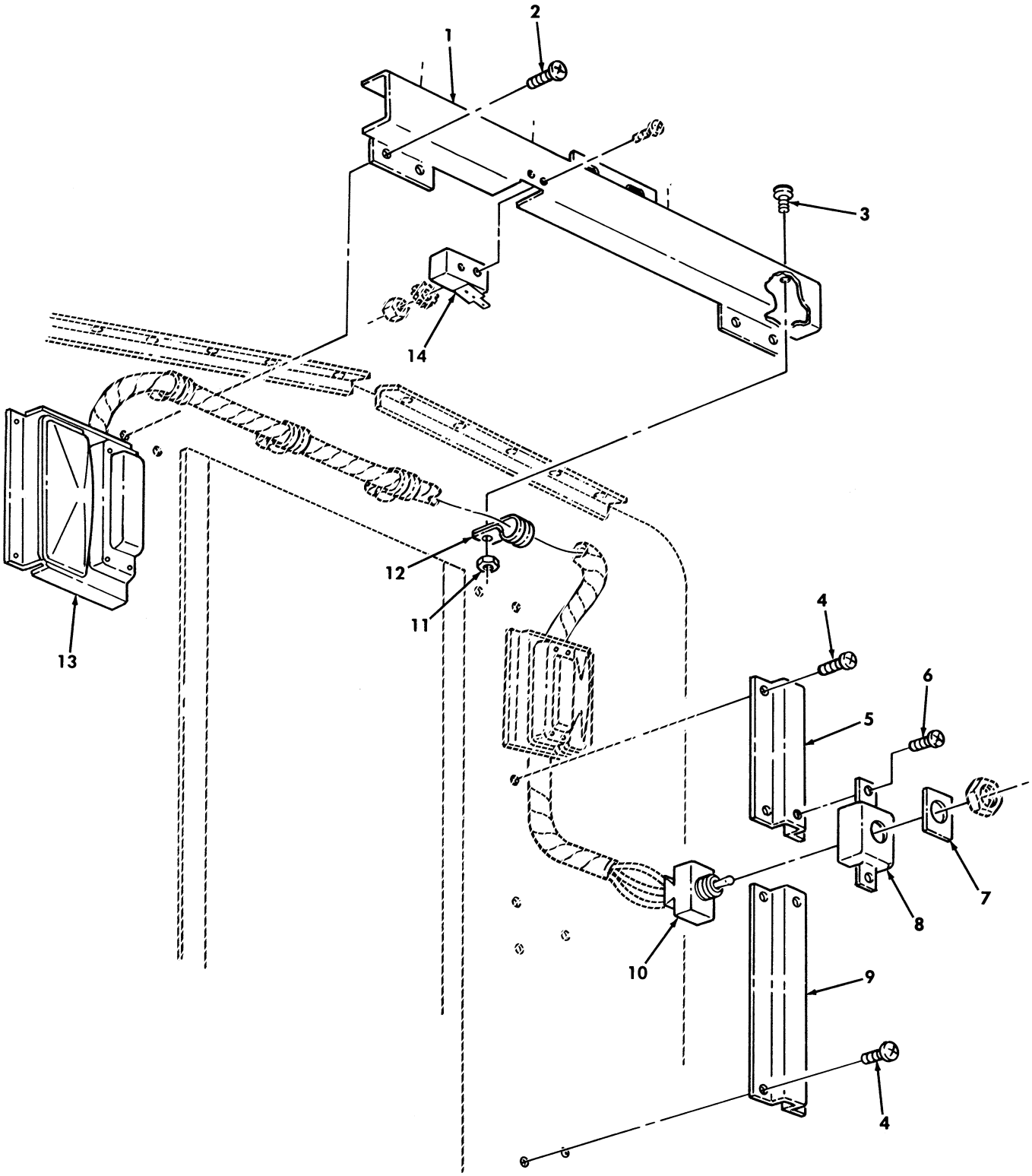

Figure 396. Wiring Harness Channel and Hardware.

(1) ITEM NO	(2) SMR CODE	(3) NSN	(4) CAGEC	(5) PART NUMBER	(6) DESCRIPTION AND USABLE ON CODES(UOC)	(7) QTY
					GROUP 3303 WINTERIZATION KITS	
					FIG. 396 WIRING HARNESS CHANNEL AND HARDWARE	
1	PFOZZ	2510013178258	19207	12342214	CHANNEL,BODY PART OF KIT P/N 5705611 UOC:A13,A14,H13,H14	1
2	PAOZZ	5305004324253	96906	MS51861-67	SCREW,TAPPING 1/4-14 X .75,PART OF KIT P/N 5705611..... UOC:A13,A14,H13,H14	6
3	PAOZZ	5305009897434	96906	MS35207-263	SCREW,MACHINE #10-32 X .50,PART OF KIT P/N 5705611..... UOC:A13,A14,H13,H14	4
4	PAOZZ	5305000567879	96906	MS35493-74	SCREW,WOOD #10 X .50,PART OF KIT P/N 5705611..... UOC:A13,A14,H13,H14	14
5	PFOZZ	2540013173350	19207	12342199	CHANNEL,LIFT,VEHICL PART OF KIT P/N 5705611..... UOC:A13,A14,H13,H14	1
6	PAOZZ	5305009906444	96906	MS35207-261	SCREW,MACHINE #10-32 X .375,PART OF KIT P/N 5705611..... UOC:A13,A14,H13,H14	2
7	PFOZZ	9905013240886	19207	12342194	PLATE,INSTRUCTION PART OF KIT P/N 5705611..... UOC:A13,A14,H13,H14	1
8	PFOZZ	5975013226373	19207	12342198	JUNCTION BOX PART OF KIT P/N 5705611 UOC:A13,A14,H13,H14	1
9	PFOZZ	2540013162697	34623	12342200	CHANNEL,LIFT,VEHICL PART OF KIT P/N 5705611..... UOC:A13,A14,H13,H14	1
10	PAOZZ	5930006814727	96906	MS24523-21	SWITCH,TOGGLE PART OF KIT P/N 5705611..... UOC:A13,A14,H13,H14	1
11	PAOZZ	5310008775797	96906	MS21044N3	NUT,SELF-LOCKING,HE #10-32,PART OF KIT P/N 5705611..... UOC:A13,A14,H13,H14	4
12	PAOZZ	5340007647051	96906	MS21333-69	CLAMP,LOOP PART OF KIT P/N 5705611. UOC:A13,A14,H13,H14	4
13	PAOZZ	6220013230431	19207	12342403	STOP LIGHT-TAILLIGH PART OF KIT P/N 5705611..... UOC:A13,A14,H13,H14	2
14	PFOZZ	5930012663919	34623	5598011	SWITCH,SENSITIVE PART OF KIT P/N 5705611..... UOC:A13,A14,H13,H14	1

END OF FIGURE

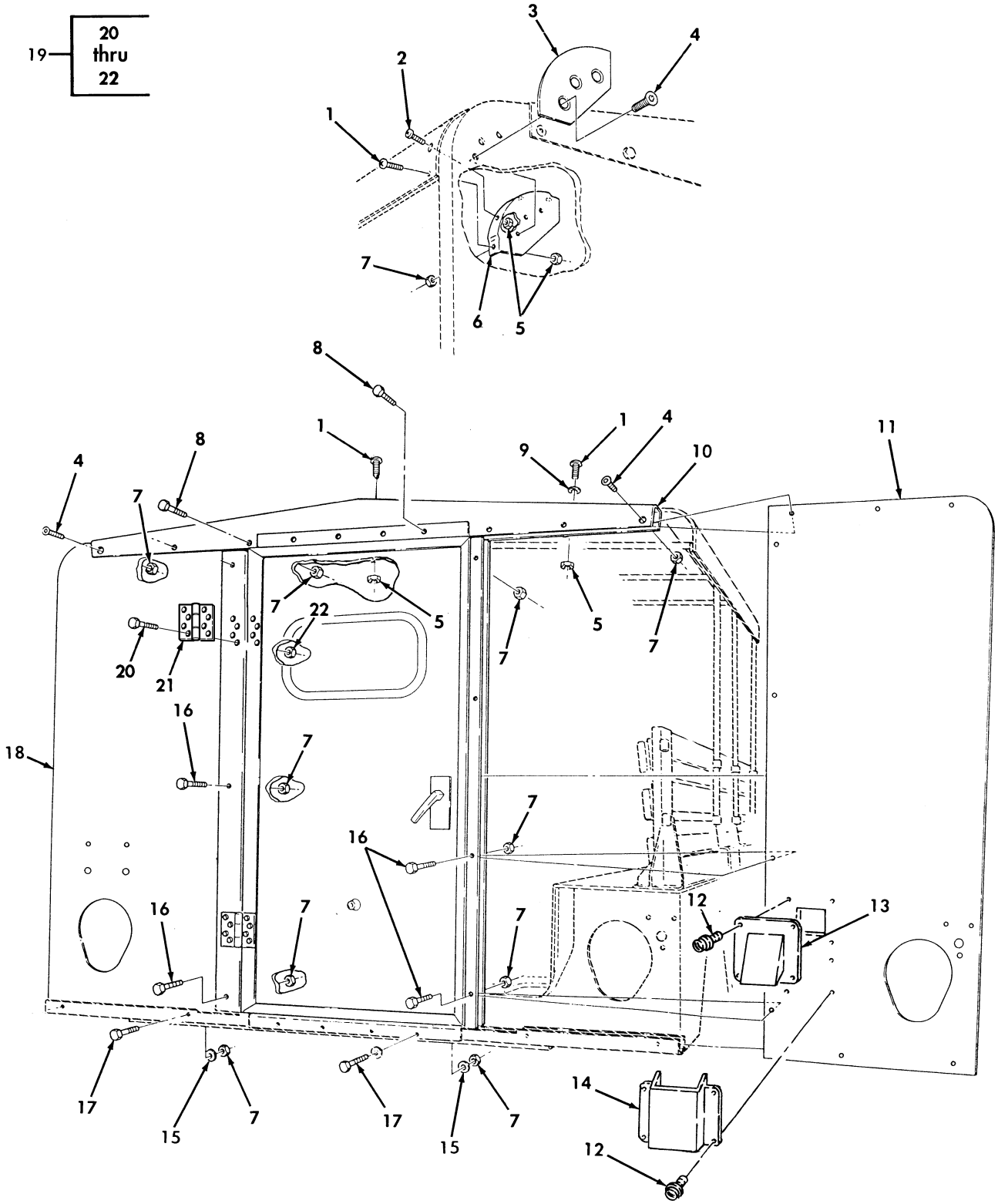

Figure 397. End Closures, Door Assembly, and Mounting Hardware.

(1) ITEM NO	(2) SMR CODE	(3) NSN	(4) CAGEC	(5) PART NUMBER	(6) DESCRIPTION AND USABLE ON CODES(UOC)	(7) QTY
					GROUP 3303 WINTERIZATION KITS	
					FIG. 397 END CLOSURES,DOOR ASSEMBLY, AND MOUNTING HARDWARE	
1	PAOZZ	5305009932460	96906	MS35207-282	SCREW,MACHINE 1/4-28 X .875,PART OF KIT P/N 5705611..... UOC:A13,A14,H13,H14	14
2	PAOZZ	5305009932738	96906	MS35207-280	SCREW,MACHINE 1/4-28 X .75,PART OF KIT P/N 5705611..... UOC:A13,A14,H13,H14	4
3	PAOZZ	5340013182180	19207	12342324	PLATE,MOUNTING PART OF KIT P/N 5705611..... UOC:A13,A14,H13,H14	2
4	PAOZZ	5305013159683	96906	MS35191-348	SCREW,MACHINE 1/2-20 X 2.00 PART OF KIT P/N 5705611..... UOC:A13,A14,H13,H14	8
5	PAOZZ	5310004838791	96906	MS17829-4F	NUT,SELF-LOCKING,HE 1/4-28 PART OF KIT P/N 5705611..... UOC:A13,A14,H13,H14	8
6	PAOZZ	5340013184893	19207	12342322	BRACKET,MOUNTING PART OF KIT P/N 5705611..... UOC:A13,A14,H13,H14	2
7	PAOZZ	5310007749073	72582	190171	NUT,SELF-LOCKING,CA 1/2-20 PART OF KIT P/N 5705611..... UOC:A13,A14,H13,H14	28
8	PAOZZ	5305007195239	96906	MS90727-116	SCREW,CAP,HEXAGON H 1/2-20 X 2.25, PART OF KIT P/N 5705611..... UOC:A13,A14,H13,H14	8
9	PAOZZ	5310008094058	96906	MS27183-10	WASHER,FLAT 1/4 PART OF KIT P/N 5705611..... UOC:A13,A14,H13,H14	8
10	PAFZZ	2510013195952	19207	12342317	FRAME,SECTION,STRUC PART OF KIT P/N 5705611..... UOC:A13,A14,H13,H14	1
11	KFFZZ		19207	12342223-2	CLOSURE END R.H. PART OF KIT P/N 5705611..... UOC:A13,A14,H13,H14	1
12	PAOZZ	5305013159882	96906	MS35495-126	SCREW,WOOD #14 X 1.00 PART OF KIT P/N 5705611..... UOC:A13,A14,H13,H14	8
13	PFOZZ	2540014767827	19207	12446983	VENTILATOR PART OF KIT P/N 5705611.. UOC:A13,A14,H13,H14	1
14	PFOZZ	2540014770242	19207	12446981	DIVERTER,LIGHT PART OF KIT P/N 5705611..... UOC:A13,A14,H13,H14	1
15	PAOZZ	5310008095998	96906	MS27183-18	WASHER,FLAT 1/2 PART OF KIT P/N 5705611..... UOC:A13,A14,H13,H14	12
16	PAOZZ	5305007195238	80204	B1821BH050F200N	SCREW,CAP,HEXAGON H 1/2-20 X 2.00 PART OF KIT P/N 5705611..... UOC:A13,A14,H13,H14	4

(1) ITEM NO	(2) SMR CODE	(3) NSN	(4) CAGEC	(5) PART NUMBER	(6) DESCRIPTION AND USABLE ON CODES(UOC)	(7) QTY
17	PAOZZ	5305007195241	80204	B1821BH050F275N	SCREW,CAP,HEXAGON H 1/2-20 X 2.75, PART OF KIT P/N 5705611..... UOC:A13,A14,H13,H14	8
* 18	KFFZZ		19207	12342223-1	CLOSURE END L.H. PART OF KIT P/N 5705611..... UOC:A13,A14,H13,H14	1
* 19	PAOZZ	2510013144892	19207	12342330	DOOR,VEHICULAR PART OF KIT P/N 5705611..... UOC:A13,A14,H13,H14	1
* 20	PAOZZ	5305007195241	80204	B1821BH050F275N	.SCREW,CAP HEXAGON H..... UOC:A13,A14,H13,H14	16
* 21	PAOZZ	2510014988000	19207	12342327	.HINGE,DOOR,VEHICLA..... UOC:A13,A14,H13,H14	2
* 22	PAOZZ	5310007749073	72582	190171	.NUT,SELF-LOCKING,HE..... UOC:A13,A14,H13,H14	16
KIT	PDFZZ	2540013140142	19207	5705611	WINTERIZATION KIT..... UOC:A13,A14,H13,H14	1
					ADAPTER,CONNECTOR (1) 386-9	
					ADAPTER,CONNECTOR (1) 386-11	
					ADAPTER,STRAIGHT,PI(2) 384-3	
					ADAPTER,STRAIGHT,PI(1) 384-15	
					ADAPTER,STRAIGHT,PI(1) 385-5	
					ADAPTER,STRAIGHT,PI(2) 388-2	
					ADAPTER,VEHICLE STO(1) 393-14	
					BASE PLATE,SPACE HE(1) 387-9	
					BLOCK,PLYWOOD (2) 389-8	
					BOLT,MACHINE (4) 388-15	
					BOLT,MACHINE (2) 390-6	
					BOLT,MACHINE (3) 392-3	
					BOW,VEHICULAR,TOP (3) 389-6	
					BRACKET,ANGLE (1) 388-17	
					BRACKET,DOUBLE ANGL(1) 384-12	
					BRACKET,MOUNTING (1) 389-5	
					BRACKET,MOUNTING (2) 397-6	
					BRACKET,MULTIPLE AN(1) 387-11	
					BRACKET,VEHICULAR C(1) 389-13	
					BRACKET,VEHICULAR C(1) 389-13	
					BRACKET,VEHICULAR C(1) 392-6	
					CABLE ASSEMBLY,SPEC(1) 383-9	
					CABLE ASSEMBLY,SPEC(1) 387-18	
					CAP,PROTECTIVE,DUST(23) 394-1	
					CAP,PROTECTIVE,DUST(2) 394-2	
					CAP,PROTECTIVE,DUST(52) 394-3	
					CAP,TUBE (1) 384-5	
					CHANNEL,BODY (1) 396-1	
					CHANNEL,LIFT,VEHICU(1) 396-5	
					CHANNEL,LIFT,VEHICU(1) 396-9	
					CIRCUIT,BREAKER (1) 385-12	
					CLAMP,HOSE (3) 385-4	
					CLAMP,HOSE (2) 386-7	
					CLAMP,HOSE (1) 387-2	
					CLAMP,HOSE (2) 387-5	
					CLAMP,HOSE (3) 388-5	

(1) ITEM NO	(2) SMR CODE	(3) NSN	(4) CAGEC	(5) PART NUMBER	(6) DESCRIPTION AND USABLE ON CODES(UOC)	(7) QTY
					CLAMP,HOSE (2) 393-16	
					CLAMP,LOOP (1) 385-2	
					CLAMP,LOOP (1) 386-6	
					CLAMP,LOOP (1) 386-10	
					CLAMP,LOOP (10) 391-7	
					CLAMP,LOOP (4) 396-12	
					CLOSURE END,R.H. (1) 397-11	
					CLOSURE END,L.H. (1) 397-18	
					CONTROL BOX,ELECTRI(1) 388-16	
					COUPLING,PIPE (1) 385-6	
					COUPLING,PIPE (1) 385-11	
					COVER ASSEMBLY (1) 382-14	
					COVER ASSEMBLY (1) 382-14	
					COVER ASSEMBLY (1) 382-15	
					COVER ASSEMBLY,SIDE(1) 382-15	
					COVER,FITTED,VEHICU(1) 395-6	
					COVER,FLOOR,L.H. (1) 382-11	
					COVER,FLOOR,R.H. (1) 382-11	
					COVER,L.H. (1) 382-7	
					COVER,R.H. (1) 382-7	
					CURTAIN,VEHICULAR,B(2) 389-2	
					DIVERTER,LIGHT (1) 397-14	
					DOOR,VEHICULAR (1) 397-19	
					DUMMY CONNECTOR,PLU(1) 386-1	
					ELBOW,AIR CONDITION(1) 387-3	
					ELBOW,PIPE TO HOSE (1) 388-6	
					ELBOW,PIPE TO TUBE (1) 385-8	
					FILTER,FLUID (1) 388-7	
					FLOOR COVER ASSEMBL(1) 383-1	
					FLOOR COVER ASSEMBL(1) 383-6	
					FRAME SECTION,STRUC(1) 395-17	
					FRAME SECTION,STRUC(1) 397-10	
					GASKET (1) 387-10	
					GROMMET,NONMETALLIC(1) 387-13	
					HANDLE,DOOR (1) 395-10	
					HEATER,VEHICULAR,CO(1) 387-4	
					HOSE,AIR DUCT (1) 393-17	
					HOSE,NONMETALLIC (1) 386-8	
					HOSE,NONMETALLIC (1) 388-1	
					JUNCTION BOX (1) 396-8	
					LADDER,VEHICLE BOA (1) 390-10	
					LEAD,ELECTRICAL (1) 384-10	
					LEAD,ELECTRICAL (1) 386-2	
					MOLDING,METAL (2) 383-3	
					MOLDING,METAL (1) 383-4	
					MOLDING,METAL (1) 393-8	
					MOLDING,METAL (2) 395-2	
					MOLDING,METAL (2) 395-3	
					MOLDING,METAL (1) 395-18	
					MOLDING,METAL (2) 395-23	
					NIPPLE,PIPE (1) 385-9	
					NUT,PLAIN,BLIND RIV(9) 383-7	
					NUT,PLAIN,EXTENDED (50) 391-6	

(1) ITEM NO	(2) SMR CODE	(3) NSN	(4) CAGEC	(5) PART NUMBER	(6) DESCRIPTION AND USABLE ON CODES(UOC)	(7) QTY
					NUT,PLAIN,EXTENDED (17) 393-4	
					NUT,PLAIN,EXTENDED (15) 395-21	
					NUT,PLAIN,PLATE (6) 393-8	
					NUT,SELF-LOCKING,CA(4) 390-4	
					NUT,SELF-LOCKING,CA(28) 397-7	
					NUT,SELF-LOCKING,HE(48) 382-6	
					NUT,SELF-LOCKING,HE(16) 382-10	
					NUT,SELF-LOCKING,HE(2) 384-9	
					NUT,SELF-LOCKING,HE(2) 388-3	
					NUT,SELF-LOCKING,HE(2) 388-10	
					NUT,SELF-LOCKING,HE(36) 389-1	
					NUT,SELF-LOCKING,HE(4) 389-4	
					NUT,SELF-LOCKING,HE(4) 389-10	
					NUT,SELF-LOCKING,HE(18) 389-12	
					NUT,SELF-LOCKING,HE(6) 389-14	
					NUT,SELF-LOCKING,HE(2) 390-5	
					NUT,SELF-LOCKING,HE(4) 390-9	
					NUT,SELF-LOCKING,HE(3) 393-12	
					NUT,SELF-LOCKING,HE(3) 392-4	
					NUT,SELF-LOCKING,HE(4) 392-11	
					NUT,SELF-LOCKING,HE(4) 393-15	
					NUT,SELF-LOCKING,HE(2) 395-8	
					NUT,SELF-LOCKING,HE(4) 396-11	
					NUT,SELF-LOCKING,HE(8) 397-5	
					NUT,SHEET,SPRING (3) 395-16	
					O-RING (1) 387-15	
					PIN,COTTER (2) 390-14	
					PIN,STRAIGHT,HEADED(2) 390-11	
					PLATE,INSTRUCTION (1) 394-4	
					PLATE,INSTRUCTION (1) 396-7	
					PLATE,MENDING (8) 391-2	
					PLATE,MENDING (1) 392-10	
					PLATE,MENDING (1) 390-12	
					PLATE,MOUNTING (1) 393-2	
					PLATE,MOUNTING (1) 395-13	
					PLATE,MOUNTING (2) 397-3	
					PLATE,SEAM (1) 391-3	
					PUMP,FUEL (1) 384-6	
					RIVET,BLIND (4) 384-14	
					RUBBER STRIP (1) 393-5	
					RUBBER STRIP (2) 395-4	
					RUBBER,STRIP (2) 395-7	
					RUBBER STRIP (1) 395-22	
					SCREW,CAP,HEXAGON H(2) 384-13	
					SCREW,CAP,HEXAGON H(4) 387-7	
					SCREW,CAP,HEXAGON H(6) 387-17	
					SCREW,CAP,HEXAGON H(2) 388-8	
					SCREW,CAP,HEXAGON H(2) 388-12	
					SCREW,CAP,HEXAGON H(4) 389-3	
					SCREW,CAP,HEXAGON H(18) 389-11	
					SCREW,CAP,HEXAGON H(6) 395-14	
					SCREW,CAP,HEXAGON H(4) 390-2	
					SCREW,CAP,HEXAGON H(2) 390-15	

(1) ITEM NO	(2) SMR CODE	(3) NSN	(4) CAGEC	(5) PART NUMBER	(6) DESCRIPTION AND USABLE ON CODES(UOC)	(7) QTY
					SCREW,CAP,HEXAGON H(2) 392-7	
					SCREW,CAP,HEXAGON H(2) 392-8	
					SCREW,CAP,HEXAGON H(1) 393-1	
					SCREW,CAP,HEXAGON H(6) 393-3	
					SCREW,CAP,HEXAGON H(10) 393-7	
					SCREW,CAP,HEXAGON H(3) 393-9	
					SCREW,CAP,HEXAGON H(1) 395-12	
					SCREW,CAP,HEXAGON H(6) 395-14	
					SCREW,CAP,HEXAGON H(8) 395-19	
					SCREW,CAP,HEXAGON H(8) 397-8	
					SCREW,CAP,HEXAGON H(4) 397-16	
					SCREW,CAP,HEXAGON H(8) 397-17	
					SCREW,MACHINE (48) 382-4	
					SCREW,MACHINE (8) 382-8	
					SCREW,MACHINE (8) 382-13	
					SCREW,MACHINE (9) 383-5	
					SCREW,MACHINE (4) 389-7	
					SCREW,MACHINE (2) 390-7	
					SCREW,MACHINE (50) 391-1	
					SCREW,MACHINE (4) 393-11	
					SCREW,MACHINE (4) 396-3	
					SCREW,MACHINE (2) 396-6	
					SCREW,MACHINE (14) 397-1	
					SCREW,MACHINE (4) 397-2	
					SCREW,MACHINE (8) 397-4	
					SCREW,TAPPING (20) 395-1	
					SCREW,TAPPING (3) 395-15	
					SCREW,TAPPING (6) 396-2	
					SCREW,WOOD (12) 382-1	
					SCREW,WOOD (19) 383-2	
					SCREW,WOOD (1) 385-1	
					SCREW,WOOD (2) 385-13	
					SCREW,WOOD (8) 387-12	
					SCREW,WOOD (2) 390-13	
					SCREW,WOOD (16) 392-1	
					SCREW,WOOD (4) 392-2	
					SCREW,WOOD (1) 393-6	
					SCREW,WOOD (4) 394-5	
					SCREW,WOOD (8) 395-11	
					SCREW,WOOD (1) 395-20	
					SCREW,WOOD (24) 395-24	
					SCREW,WOOD (14) 396-4	
					SCREW,WOOD (8) 397-12	
					SEAL,NONMETALLIC (2) 395-5	
					SEAT BACK (2) 382-12	
					SHELL,ELECTRICAL CO(1) 386-12	
					SHIELD,HEATER DUCT (1) 387-6	
					SHIELD,HEATER DUCT (1) 388-13	
					SLEEVE,COUPLING (1) 387-1	
					SPACER,PLATE (12) 382-2	
					SPACER,SLEEVE (2) 388-4	
					SPACER,SLEEVE (5) 392-5	
					STOP LIGHT-TAILLIGH(2) 396-13	

(1) ITEM NO	(2) SMR CODE	(3) NSN	(4) CAGEC	(5) PART NUMBER	(6) DESCRIPTION AND USABLE ON CODES(UOC)	(7) QTY
					STRAINER ELEMENT,SE(1) 393-13	
					STRAP,RETAINING (20) 391-9	
					STRAP,TIEDOWN,ELECT(1) 386-3	
					STRAP,TIEDOWN,ELECT(1) 388-11	
					SUPPORT (1) 391-4	
					SUPPORT (1) 391-5	
					SUPPORT (1) 391-8	
					SUPPORT ASSEMBLY,BO(1) 390-1	
					SWITCH,SENSITIVE (1) 396-14	
					SWITCH,TOGGLE (1) 396-10	
					TEE,PIPE (1) 384-4	
					TEMPLATE,FUEL PUMP (1) 384-11	
					TOP COVER ASSEMBLY (1) 382-3	
					TOP COVER ASSEMBLY (1) 382-3	
					TUBE (2) 385-3	
					TUBE ASSEMBLY,METAL(1) 384-1	
					TUBE ASSEMBLY,METAL(1) 384-2	
					TUBE ASSEMBLY,METAL(1) 385-7	
					TUBE ASSEMBLY,METAL(1) 386-4	
					TUBE ASSEMBLY,METAL(1) 386-5	
					TUBE ASSEMBLY,METAL(1) 387-14	
					VENTILATOR (1) 397-13	
					VENTILATOR,AIR CIRC(1) 393-10	
					WASHER,FLAT (48) 382-5	
					WASHER,FLAT (16) 382-9	
					WASHER,FLAT (4) 384-8	
					WASHER,FLAT (1) 385-10	
					WASHER,FLAT (1) 387-16	
					WASHER,FLAT (2) 388-9	
					WASHER,FLAT (4) 389-9	
					WASHER,FLAT (4) 390-3	
					WASHER,FLAT (4) 390-8	
					WASHER,FLAT (2) 392-9	
					WASHER,FLAT (4) 395-9	
					WASHER,FLAT (8) 397-9	
					WASHER,FLAT (12) 397-15	
					WASHER,LOCK (1) 384-7	
					WASHER,LOCK (10) 387-8	
					WASHER,LOCK (4) 388-14	

END OF FIGURE

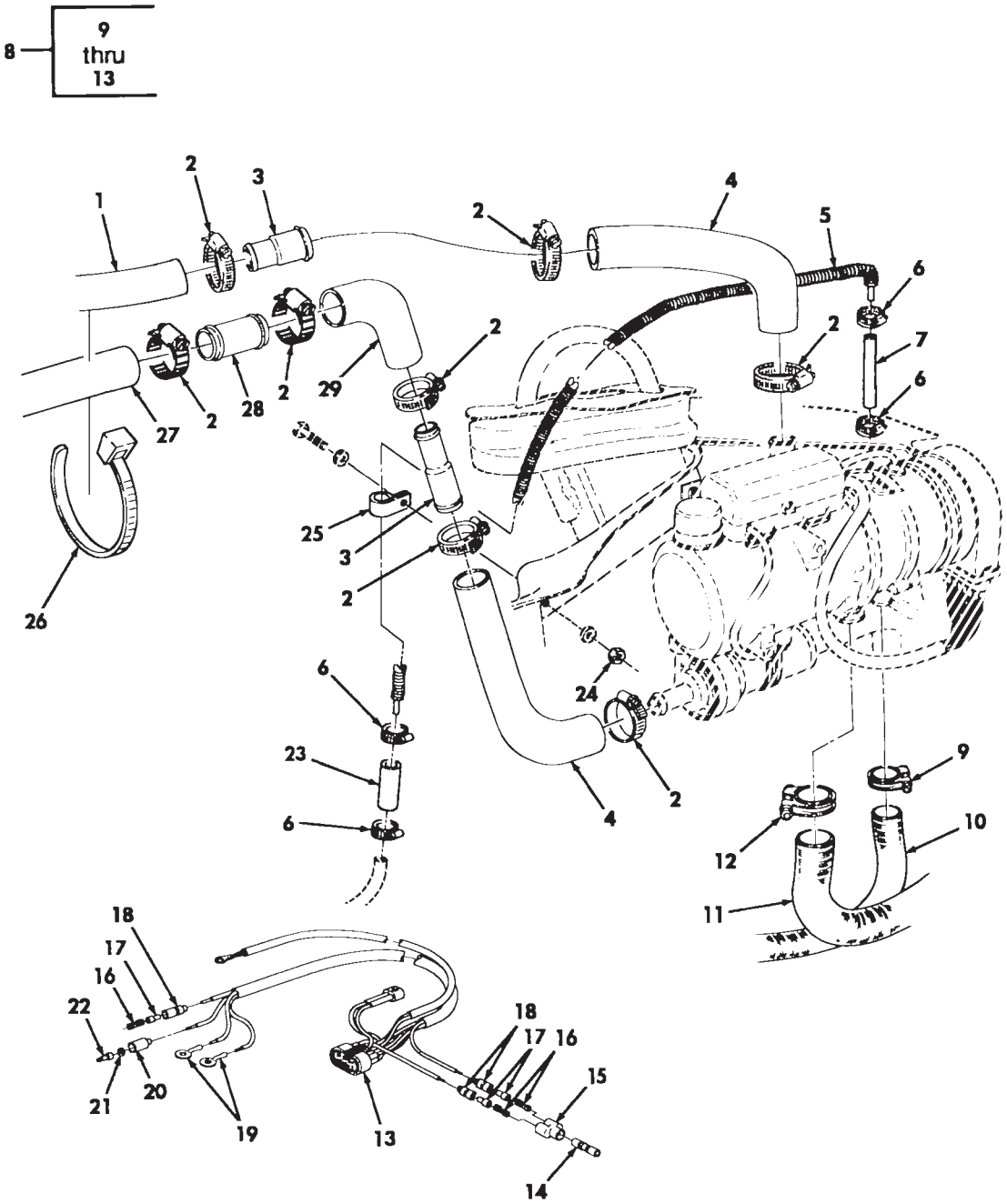

SEE SHEET 2 FOR HEATER DOWNPARTS

Figure 397A. Engine and Crew Compartment Heater and Related Parts (Sheet 1 of 2).

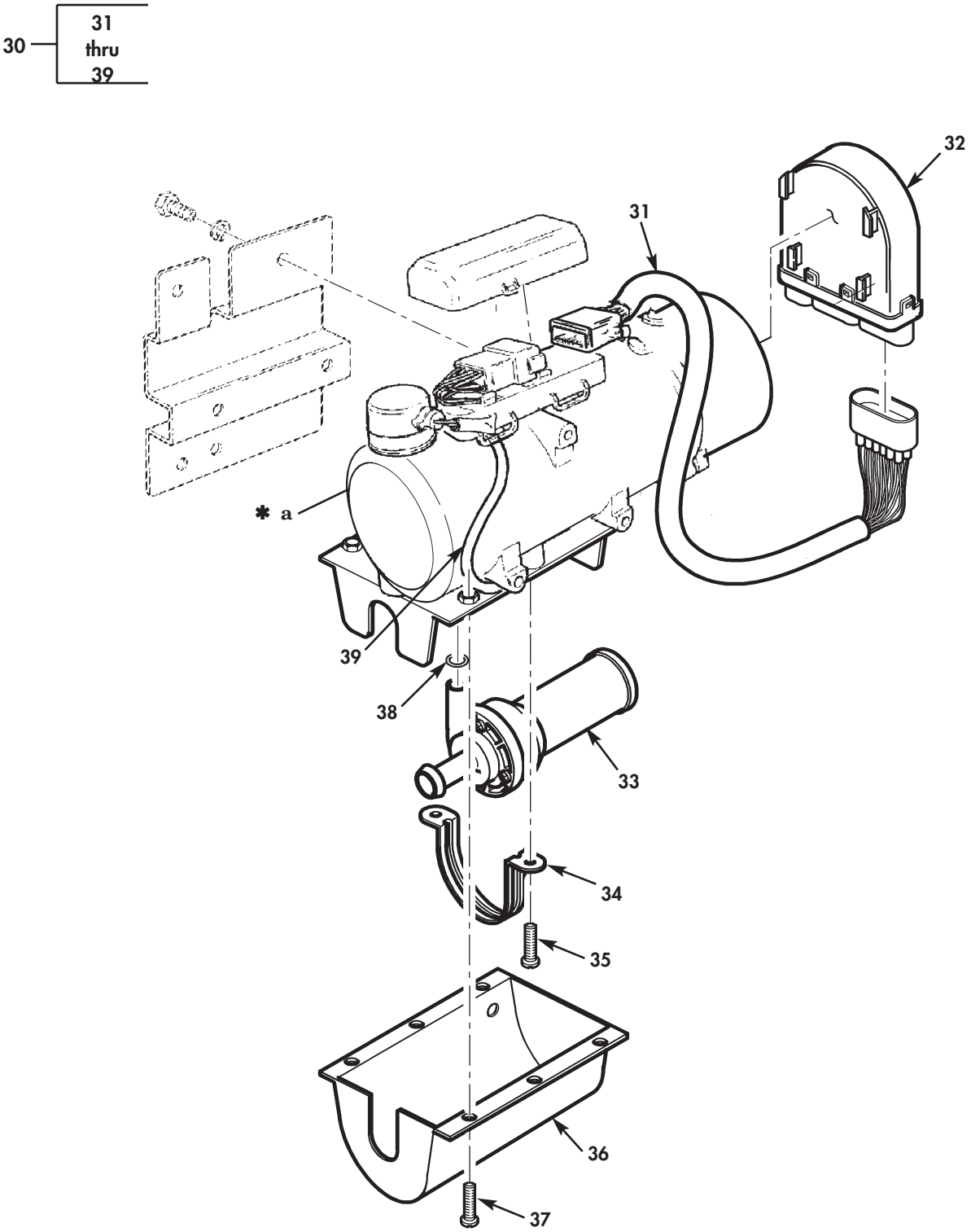

✱ a PART OF ITEM 30

Figure 397A. Engine and Crew Compartment Heater and Related Parts (Sheet 2 of 2).

(1) ITEM NO	(2) SMR CODE	(3) NSN	(4) CAGEC	(5) PART NUMBER	(6) DESCRIPTION AND USABLE ON CODES(UOC)	(7) QTY
					GROUP 3303 SPECIAL PURPOSE KITS	
					FIG. 397A ENGINE AND CREW COMPARTMENT HEATER AND RELATED PARTS	
* 1	MOOZZ		19207	12339155-3-25	HOSE,NONMETALLIC MAKE FROM HOSE P/N MS521304A203R 25.0 INCHES LONG PART OF KIT P/N 57K3497.....	1
* 2	PAOZZ	4730009083194	96906	MS35842-11	CLAMP,HOSE PART OF KIT P/N 57K3497	8
* 3	PAOZZ	4730014751191	19207	12469041	REDUCER,TUBE PART OF KIT P/N 57K3497.....	2
* 4	PAOZZ	4720014749105	19207	12339251-1	HOSE,PREFORMED PART OF KIT P/N 57K3497.....	2
* 5	PAOZZ	4710014751227	19207	12469054	TUBE ASSEMBLY,METAL PART OF KIT P/N 57K3497.....	1
* 6	PAOZZ	4730011188278	76599	MMF4-SS	CLAMP,HOSE PART OF KIT P/N 57K3497.	4
* 7	MOOZZ		24617	9436711-2.5	HOSE,NONMETALLIC MAKE FROM HOSE P/N 9438381 2.50 INCHES LONG PART OF KIT P/N 57K3497.....	1
* 8	AOOOO		19207	12469058	HEATER ASSEMBLY PART OF KIT P/N 57K3497.....	1
* 9	PAOZZ	5340012855558	62380	100.424	.CLAMP,LOOP.....	1
* 10	PAOZZ	4720014752616	62380	29842A	.PIPE,INTAKE.....	1
* 11	PAOZZ	2540014766062	62380	442437	.PIPE,EXHAUST.....	1
* 12	PAOZZ	5340014753164	62380	367400	.CLAMP,LOOP.....	1
* 13	PAOZZ	6150014751843	62380	905.782	.CABLE ASSEMBLY,SPEC.....	1
* 14	PAOZZ	5935008074109	19207	8741492	ADAPTER,CONNECTOR PART OF KIT P/N 57K3497.....	1
* 15	PAOZZ	5935009006281	96906	MS27147-1	ADAPTER,CONNECTOR PART OF KIT P/N 57K3497.....	1
* 16	PAOZZ	5940003996676	19207	8338564	TERMINAL,QUICK SE PART OF KIT P/N 57K3497	3
* 17	PAOZZ	5970008338562	19207	8338562	INSULATOR,BUSHING PART OF KIT P/N 57K3497.....	3
* 18	PAOZZ	5975006605962	19207	8724494	CABLE,NIPPLE PART OF KIT P/N 57K3497.....	3
* 19	PAOZZ	5940002835280	96906	MS25036-106	TERMINAL,LUG PART OF KIT P/N 57K3497.....	2
* 20	PAOZZ	5935006915591	97403	13207E6498-2	SHELL,ELECTRICAL PART OF KIT P/N 57K3497.....	1
* 21	PAOZZ	5310006560067	19207	8724497	WASHER,SLOTTED PART OF KIT P/N 57K3497.....	1
* 22	PAOZZ	5999004263144	96906	MS27148-3	TERMINAL,LUG PART OF KIT P/N 57K3497.....	1
* 23	MOOZZ		24617	9436711-2.0	HOSE,NONMETALLIC MAKE FROM HOSE P/N 9438381 2.00 INCHES LONG PART OF KIT P/N 57K3497.....	1
* 24	PAOZZ	5310000614650	96906	MS51943-31	NUT,SELF-LOCKING PART OF KIT P/N... 57K3497.....	1
* 25	PAOZZ	5340009936207	96906	MS21333-99	CLAMP,LOOP PART OF KIT P/N 57K3497.	1
* 26	PAOZZ	5975010345871	96906	MS3367-7-0	STRAP,TIEDOWN ELEC PART OF KIT P/N 57K3497.....	5

(1) ITEM NO	(2) SMR CODE	(3) NSN	(4) CAGEC	(5) PART NUMBER	(6) DESCRIPTION AND USABLE ON CODES(UOC)	(7) QTY
* 27	MOOZZ		19207	12339155-3-15	HOSE,NONMETALLIC MAKE FROM HOSE P/N MS521304B203R 15.0 INCHES LONG PART OF KIT P/N 57K3497.....	1
* 28	PAOZZ	4730013948129	96906	MS24520-7	MENDER,HOSE PART OF KIT P/N 57K3497	1
* 29	PAOZZ	4720011892218	19207	12339251	HOSE,PREFORMED PART OF KIT P/N 57K3497.....	1
* 30	PAOZZ	2540015012690	62380	67582B	HEATER,VEHICULAR,CO.....	1
* 31	PAOZZ	5999014750215	62380	67134A	.HARNESS,ELECTRICAL.....	1
* 32	PAOZZ	2540014753944	62380	89093B	.CONTROL BOX,ELECTRI.....	1
* 33	PAOZZ	2930014753976	62380	65759B	.PUMP,COOLING SYSTEM.....	1
* 34	PAOZZ	5340014753171	62380	38634A	.STRAP,RETAINING.....	1
* 35	PAOZZ	5305014753402	62380	35283A	.SCREW,TAPPING.....	2
* 36	PAOZZ		62380	82436A	.SHIELD,FUEL PUMP.....	1
* 37	PAOZZ		62380	147818	.SCREW,MACHINE.....	6
* 38	PAOZZ		62380	22405A	.O-RING.....	1
* 39	PAOZZ	5999014763674	62380	67133A	.HARNESS,ELECTRICAL E.....	1

END OF FIGURE

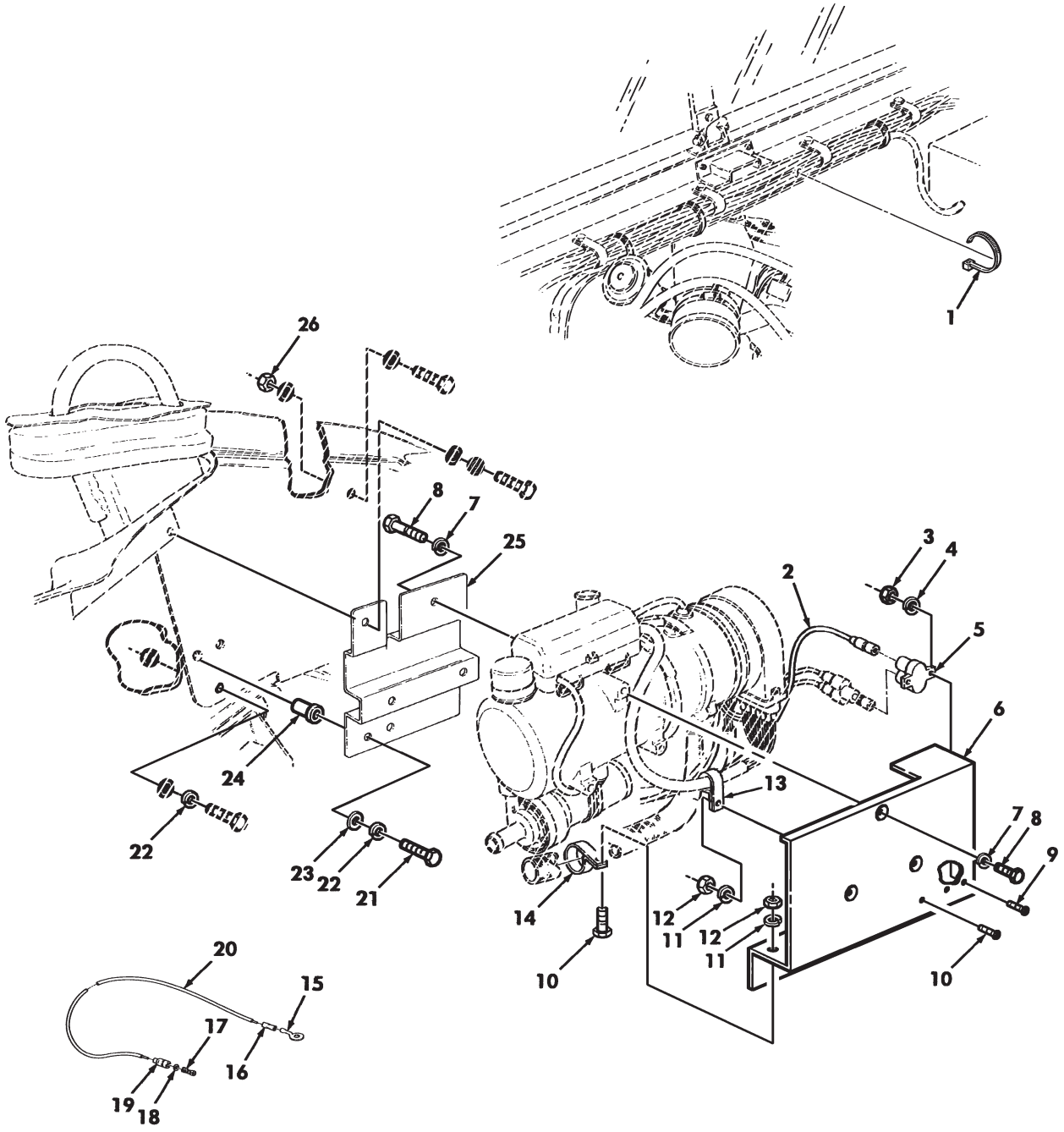

Figure 397B. Engine and Crew Compartment Heater Support Bracket, Heat Shield, and Mounting Hardware.

(1) ITEM NO	(2) SMR CODE	(3) NSN	(4) CAGEC	(5) PART NUMBER	(6) DESCRIPTION AND USABLE ON CODES(UOC)	(7) QTY
					GROUP 3303 SPECIAL PURPOSE KITS	
					FIG. 397B ENGINE AND CREW COMPARTMENT HEATER SUPPORT BRACKET,HEAT SHIELD, AND MOUNTING HARDWARE	
* 1	PAOZZ	5975009846582	96906	MS3367-1-0	STRAP,TIEDOWN ELEC PART OF KIT P/N 57K3497.....	4
* 2	PAOZZ	6145007056678	81349	M13486-1-7	WIRE,ELECTRICAL PART OF KIT P/N 57K3497.....	1
* 3	PAOZZ	5310014741368	34623	114653	NUT,PLAIN,HEXAGON PART OF KIT P/N 57K3497.....	2
* 4	PAOZZ	5310000453299	96906	MS35338-42	WASHER,LOCK PART OF KIT P/N 57K3497	2
* 5	PAOZZ	5925014302318	58536	AA5571/01-001	BREAKER,CIRCUIT PART OF KIT P/N 57K3497.....	1
* 6	PAOZZ	2990014739420	19207	12460427	GUARD,MUFFLER EXHAU PART OF KIT P/N 57K3497.....	1
* 7	PAOZZ	5310014785620	80204	B18212HRCZ080	WASHER,LOCK PART OF KIT P/N 57K3497	6
* 8	PAOZZ	5305011491938	7X677	11504336	SCREW,CAP,HEXAGON H PART OF KIT P/N 57K3497.....	6
* 9	PAOZZ	5305009846197	96906	MS35206-249	SCREW,MACHINE PART OF KIT P/N 57K3497.....	2
* 10	PAOZZ	5305009846210	96906	MS35206-263	SCREW,MACHINE PART OF KIT P/N 57K3497.....	2
* 11	PAOZZ	5310000453296	96906	MS35338-43	WASHER,LOCK PART OF KIT P/N 57K3497.....	2
* 12	PAOZZ	5310014222147	24617	116003	NUT,PLAIN,HEXAGON PART OF KIT P/N 57K3497.....	2
* 13	PAOZZ	5340007247038	96906	MS21333-76	CLAMP,LOOP PART OF KIT P/N 57K3497.	1
* 14	PAOZZ	5340001773711	80205	MS21333-16	CLAMP,LOOP PART OF KIT P/N 57K3497.	1
* 15	PAOZZ	5940006822445	96906	MS25036-158	TERMINAL,LUG PART OF KIT P/N 57K3497.....	1
* 16	PAOZZ	5970007872331	81349	M23053/5-106-2	INSULATION SLEEVING PART OF KIT P/N 57K3497.....	1
* 17	PAOZZ	5940003996676	19207	8338564	TERMINAL,SET QUICK PART OF KIT P/N 57K3497.....	1
* 18	PAOZZ	5310002988903	19207	8338570	WASHER,FLAT PART OF KIT P/N 57K3497	1
* 19	PAOZZ	2590006959076	77060	5297084	SHELL,HEAD LIGHT PART OF KIT P/N 57K3497.....	1
* 20	PAOZZ	6145007056678	81349	M13486-1-7	WIRE,ELECTRICAL PART OF KIT P/N 57K3497.....	1
* 21	PAOZZ	5306002264829	80204	B1821BH031C125N	BOLT,MACHINE PART OF KIT P/N 57K3497.....	2
* 22	PAOZZ	5310004079566	96906	MS35338-45	WASHER,LOCK PART OF KIT P/N 57K3497.....	3
* 23	PAOZZ	5310000814219	96906	MS27183-12	WASHER,FLAT PART OF KIT P/N 57K3497	2
* 24	PAOZZ	5325015053122	19207	12446871-11	INSERT,SCREW THREAD PART OF KIT P/N 57K3497.....	2
* 25	PAOZZ	5340014736897	19207	12460430	BRACKET,MULTIPLE AN PART OF KIT P/N 57K3497.....	1
* 26	PAOZZ	5310008140673	96906	MS51943-33	NUT,SELF-LOCKING PART OF KIT P/N 57K3497.....	2

END OF FIGURE

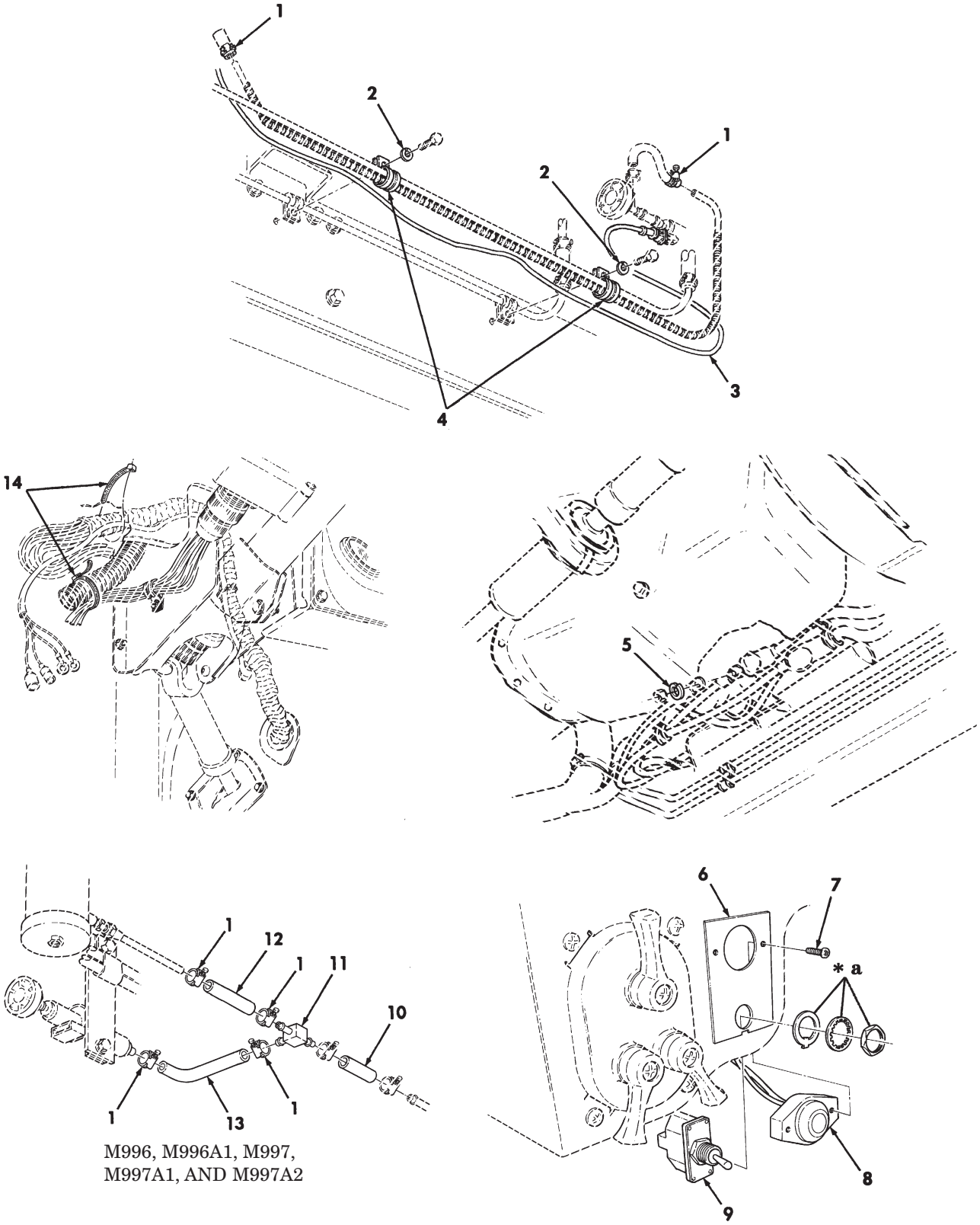

✱ **a** PART OF ITEM 9

Figure 397C. Engine and Crew Compartment Heater Switch, Fuel Lines, and Mounting Hardware.

(1) ITEM NO	(2) SMR CODE	(3) NSN	(4) CAGEC	(5) PART NUMBER	(6) DESCRIPTION AND USABLE ON CODES(UOC)	(7) QTY
					GROUP 3303 SPECIAL PURPOSE KITS	
					FIG. 397C ENGINE AND CREW COMPARTMENT HEATER SWITCH,FUEL LINES,AND MOUNTING HARDWARE	
* 1	PAOZZ	4730011188278	76599	MMF4-SS	CLAMP,HOSE PART OF KIT P/N 57K3497.	6
* 2	PAOZZ	5310006379541	81718	H2525M	WASHER,LOCK PART OF KIT P/N 57K3497.....	2
* 3	PAOZZ	5999014763674	62380	905.794	HARNESS,ELECTRICAL.....	1
* 4	PAOZZ	5340007255280	96903	MS21333-125	CLAMP,LOOP PART OF KIT P/N 57K3497	2
* 5	PAOZZ	5310000116121	29510	120384	WASHER,LOCK PART OF KIT P/N 57K3497.....	1
* 6	PAOZZ	7690014751202	19207	12469040	MARKER,INDENTIFI PART OF KIT P/N 57K3497.....	1
* 7	PAOZZ	5305011389540	96906	MS51863-33	SCREW,TAPPING PART OF KIT P/N 57K3497.....	2
* 8	PAOZZ	5980014746679	19207	12356703-4	DIODE,LIGHT EMITTI PART OF KIT P/N 57K3497.....	1
* 9	PAOZZ	5930006831628	34355	106450	SWITCH,TOGGLE PART OF KIT P/N 57K3497.....	1
* 10	MOOZZ		24617	9436356-2	HOSE,NONMETALLIC MAKE FROM HOSE P/N 9438315 2.00 INCHES LONG PART OF KIT P/N 57K3497..... UOC:A15,B15,B16,H15,H16	1
* 11	PAOZZ	4730014754524	19207	12460439	TEE,HOSE PART OF KIT P/N 57K3497... UOC:A15,B15,B16,H15,H16	1
* 12	MOOZZ		24617	9436356-3	HOSE,NONMETALLIC MAKE FROM HOSE P/N 9438315 3.00 INCHES LONG PART OF KIT P/N 57K3497..... UOC:A15,B15,B16,H15,H16	1
* 13	MOOZZ		24617	9436711-5.5	HOSE,NONMETALLIC MAKE FROM HOSE P/N 9438381 5.50 INCHES LONG PART OF KIT P/N 57K3497..... UOC:A15,B15,B16,H15,H16	1
* 14	PAOZZ	5975010345871	96906	MS3367-7-2	STRAP,TIEDOWN ELEC PART OF KIT P/N 57K3497.....	2

END OF FIGURE

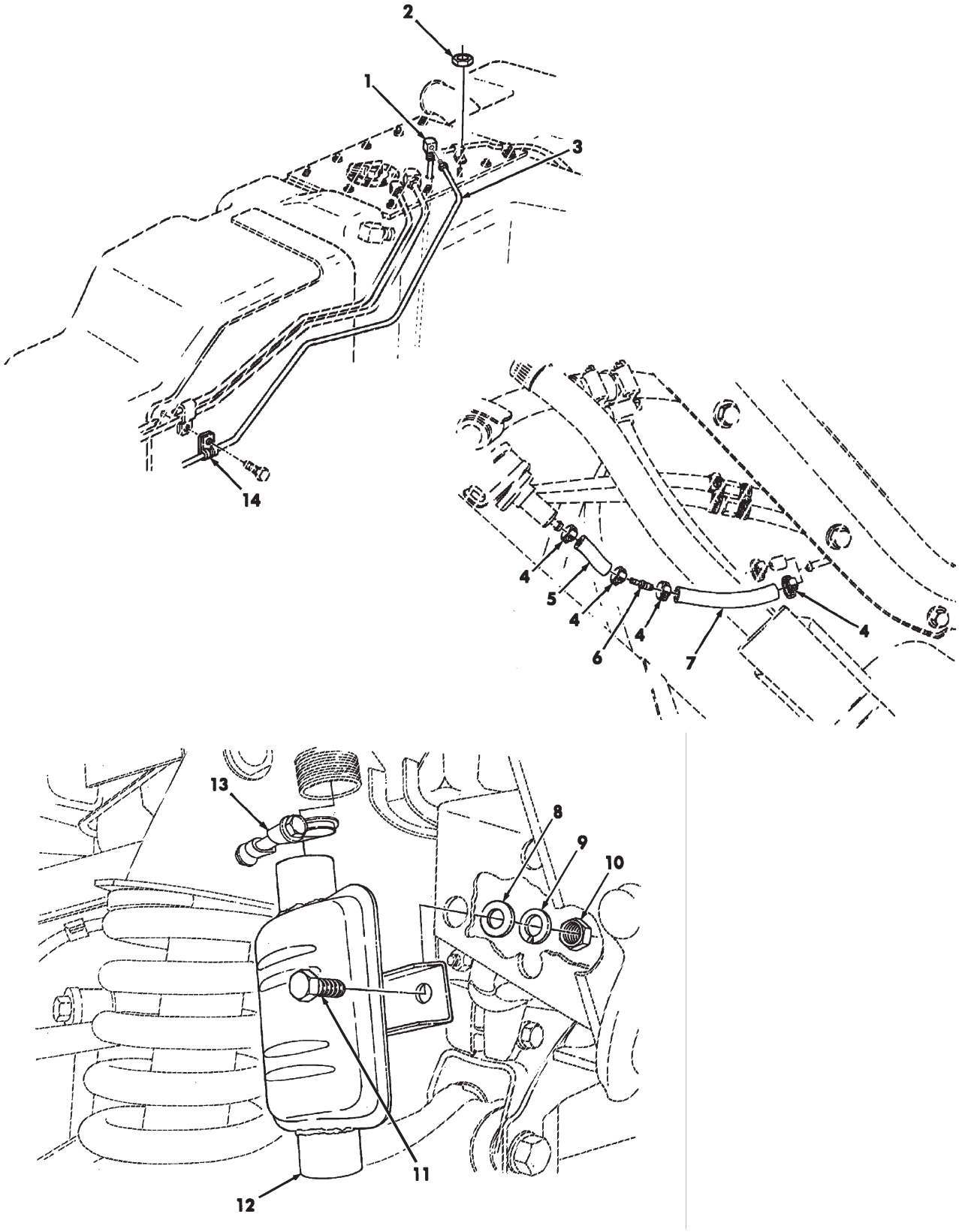

Figure 397D. Engine and Crew Compartment Heater Fuel Supply and Return Lines, Muffler, and Mounting Hardware.

(1) ITEM NO	(2) SMR CODE	(3) NSN	(4) CAGEC	(5) PART NUMBER	(6) DESCRIPTION AND USABLE ON CODES(UOC)	(7) QTY
					GROUP 3303 SPECIAL PURPOSE KITS	
					FIG. 397D ENGINE AND CREW COMPARTMENT HEATER FUEL SUPPLY AND RETURN LINES, MUFFLER, AND MOUNTING HARDWARE	
* 1	PAOZZ	4710013592956	19207	12338548-2	TUBE ASSEMBLY,METAL PART OF KIT P/N 57K3497.....	1
* 2	PAOZZ	5310000614650	96906	MS51943-31	NUT,SELF-LOCKING PART OF KIT P/N 57K3497.....	1
* 3	PAOZZ	4710013586397	19207	12342747	TUBE ASSEMBLY,METAL PART OF KIT P/N 57K3497.....	1
* 4	PAOZZ	4730011181278	76599	MMF4-SS	CLAMP,HOSE PART OF KIT P/N 57K3497. UOC:AVY,A11,A13,A14,A20,A24,A25,A26, A27,BVY,B17,B18,B20,B24,B25,C17,HVY, H11,H13,H14,H17,H18,H20,H21,H24,H25, H26,H27,H28,MMM,NNN	4
* 5	MOOZZ		24617	9436711-2.0	HOSE,NONMETALLIC MAKE FROM HOSE,P/N 9438381,2.00 INCHES LONG PART OF KIT P/N 57K3497..... UOC:AVY,A11,A13,A14,A20,A24,A25,A26, A27,BVY,B17,B18,B20,B24,B25,C17,HVY, H11,H13,H14,H17,H18,H20,H21,H24,H25, H26,H27,H28,MMM,NNN	1
* 6	PAOZZ	4730014746940	19207	12460438	REDUCER,TUBE PART OF KIT P/N 57K3497..... UOC:AVY,A11,A13,A14,A20,A24,A25,A26, A27,BVY,B17,B18,B20,B24,B25,C17,HVY, H11,H13,H14,H17,H18,H20,H21,H24,H25, H26,H27,H28,MMM,NNN	1
* 7	MOOZZ		24617	9436356-AR	HOSE,NONMETALLIC MAKE FROM HOSE,P/N 9438315,CUT LENGTH TO FIT PART OF KIT P/N 57K3497..... UOC:AVY,A11,A13,A14,A20,A24,A25,A26, A27,BVY,B17,B18,B20,B24,B25,C17,HVY, H11,H13,H14,H17,H18,H20,H21,H24,H25, H26,H27,H28,MMM,NNN	1
* 8	PAOZZ	5310014086466	24617	9417098	WASHER,FLAT PART OF KIT P/N 57K3497	1
* 9	PAOZZ	5310000116121	29510	120384	WASHER,LOCK PART OF KIT P/N 57K3497	1
* 10	PAOZZ	5310014654525	24617	9418753	NUT,PLAIN,HEXAGON PART OF KIT P/N 57K3497.....	1
* 11	PAOZZ	5305009474351	80204	B1821BH075C100N	SCREW,CAP,HEXAGON H PART OF KIT P/N 57K3497.....	1
* 12	PAOZZ	2990014753969	62380	19562D	MUFFLER,EXHAUST.....	1
* 13	PAOZZ	5340014753164	62380	367400	CLAMP,LOOP.....	1
* 14	PAOZZ	5340009936207	96906	MS21333-99	CLAMP,LOOP PART OF KIT P/N 57K3497..	1

END OF FIGURE

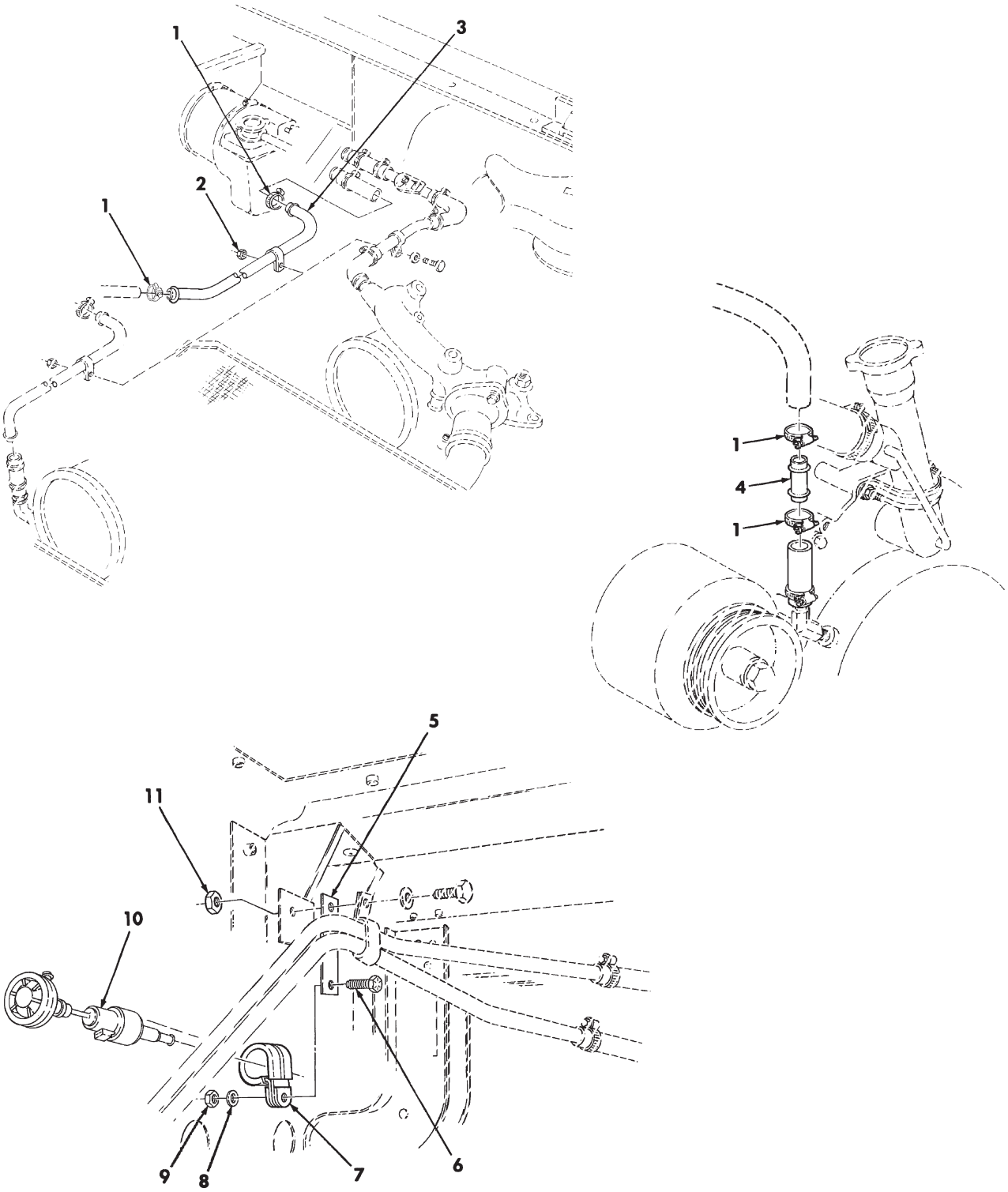

Figure 397E. Crew and Engine Compartment Heater Fuel Pump, Lines, and Mounting Hardware.

(1) ITEM NO	(2) SMR CODE	(3) NSN	(4) CAGEC	(5) PART NUMBER	(6) DESCRIPTION AND USABLE ON CODES(UOC)	(7) QTY
					GROUP 3303 SPECIAL PURPOSE KITS	
					FIG. 397E ENGINE AND CREW COMPARTMENT HEATER FUEL PUMP,LINES,AND MOUNTING HARDWARE	
* 1	PAOZZ	4730009083194	96906	MS35842-11	CLAMP,HOSE PART OF KIT P/N 57K3497.	4
* 2	PAOZZ	5310000614650	96906	MS51943-31	NUT,SELF-LOCKING PART OF KIT P/N 57K3497.....	1
* 3	PAOZZ	4710014746875	19207	12460437	TUBE,BENT METALLIC PART OF KIT P/N 57K3497.....	1
* 4	PAOZZ	4730013948192	96906	MS24520-7	MENDER,HOSE PART OF KIT P/N 57K3497	1
* 5	PAOZZ	5340014753147	19207	12469052	STRAP,RETAINING PART OF KIT P/N 57K3497.....	1
* 6	PAOZZ	5306002264825	80204	B1821BH031C075N	BOLT,MACHINE PART OF KIT P/N 57K3497.....	1
* 7	PAOZZ	5340014753159	62380	21499A	CLAMP,LOOP.....	1
* 8	PAOZZ	5310004079566	96906	MS35338-45	WASHER,LOCK PART OF KIT P/N 57K3497	1
* 9	PAOZZ	5310012097702	7X677	9429048	NUT,PLAIN,HEXAGON PART OF KIT P/N 57K3497.....	1
* 10	PAOZZ	2910014753937	62380	91473A	PUMP,FUEL.....	1
* 11	PAOZZ	5310000614650	96906	MS51943-31	NUT,SELF-LOCKING PART OF KIT P/N 57K3497.....	1
*KIT	PAOZZ	2540014754919	19207	57K3497	PARTS KIT,VEHICULAR.....	1
					ADAPTER,CONNECTOR	(1) 397A-14
					ADAPTER,CONNECTOR	(1) 397A-15
					BOLT,MACHINE	(2) 397B-21
					BOLT,MACHINE	(1) 397E-6
					BRACKET,MULTIPLE AN	(1) 397B-25
					BREAKER,CIRCUIT	(1) 397B-5
					CABLE,NIPPLE	(3) 397A-18
					CLAMP,HOSE	(8) 397A-2
					CLAMP,HOSE	(4) 397A-6
					CLAMP,HOSE	(6) 397C-1
					CLAMP,HOSE	(4) 397D-4
					CLAMP,HOSE	(4) 397E-1
					CLAMP,LOOP	(1) 397A-25
					CLAMP,LOOP	(1) 397B-13
					CLAMP,LOOP	(1) 397B-14
					CLAMP,LOOP	(2) 397C-4
					CLAMP,LOOP	(1) 397D-14
					DIODE,LIGHT EMITTING	(1) 397C-8
					GUARD,MUFFLER EXHAU	(1) 397B-6
					HEATER ASSEMBLY	(1) 397A-8
					HOSE,NONMETALLIC	(1) 397A-1
					HOSE,NONMETALLIC	(1) 397A-7
					HOSE,NONMETALLIC	(1) 397A-23
					HOSE,NONMETALLIC	(1) 397A-27
					HOSE,NONMETALLIC	(1) 397C-10
					HOSE,NONMETALLIC	(1) 397C-12
					HOSE,NONMETALLIC	(1) 397C-13

(1) ITEM NO	(2) SMR CODE	(3) NSN	(4) CAGEC	(5) PART NUMBER	(6) DESCRIPTION AND USABLE ON CODES(UOC)	(7) QTY
					HOSE,NONMETALLIC	(1) 397D-5
					HOSE,NONMETALLIC	(1) 397D-7
					HOSE,PREFORMED	(2) 397A-4
					HOSE,PREFORMED	(1) 397A-29
					INSERT,SCREW THREAD	(2) 397B-24
					INSULATOR,BUSHING	(3) 397A-17
					INSULATION,SLEEVING	(1) 397B-16
					MARKER,IDENTIFICATION	(1) 397C-6
					MENDER,HOSE	(1) 397A-28
					MENDER,HOSE	(1) 397E-4
					NUT,PLAIN,HEXAGON	(2) 397B-3
					NUT,PLAIN,HEXAGON	(2) 397B-12
					NUT,PLAIN,HEXAGON	(1) 397D-10
					NUT,PLAIN,HEXAGON	(1) 397E-9
					NUT,SELF-LOCKING	(1) 397A-24
					NUT,SELF-LOCKING	(2) 397B-26
					NUT,SELF-LOCKING	(1) 397D-2
					NUT,SELF-LOCKING	(1) 397E-2
					NUT,SELF-LOCKING	(1) 397E-11
					REDUCER,TUBE	(2) 397A-3
					REDUCER,TUBE	(1) 397D-6
					SCREW,CAP,HEXAGON	(6) 397B-8
					SCREW,CAP HEXAGON H	(1) 397D-11
					SCREW,MACHINE	(2) 397B-9
					SCREW,MACHINE	(2) 397B-10
					SCREW,TAPPING	(2) 397C-7
					SHELL,ELECTRICAL	(1) 397A-20
					SHELL,HEAD LIGHT	(1) 397B-19
					STRAP,RETAINING	(1) 397E-5
					STRAP,TIEDOWN ELEC	(5) 397A-26
					STRAP,TIEDOWN ELEC	(4) 397B-1
					STRAP,TIEDOWN ELEC	(2) 397C-14
					SWITCH,TOGGLE	(1) 397C-9
					TEE,HOSE	(1) 397C-11
					TERMINAL,LUG	(2) 397A-19
					TERMINAL,LUG	(1) 397A-22
					TERMINAL,LUG	(1) 397B-15
					TERMINAL,QUICK SE	(3) 397A-16
					TERMINAL, SET, QUICK	(1) 397B-17
					TUBE ASSEMBLY,METAL	(1) 397A-5
					TUBE ASSEMBLY METAL	(1) 397D-1
					TUBE ASSEMBLY,METAL	(1) 397D-3
					TUBE,BENT METALLIC	(1) 397E-3
					WASHER,FLAT	(1) 397B-18
					WASHER,FLAT	(2) 397B-23
					WASHER,FLAT	(1) 397D-8
					WASHER,LOCK	(2) 397B-4
					WASHER,LOCK	(6) 397B-7
					WASHER,LOCK	(2) 397B-11
					WASHER,LOCK	(3) 397B-22
					WASHER,LOCK	(2) 397C-2

(1) ITEM NO	(2) SMR CODE	(3) NSN	(4) CAGEC	(5) PART NUMBER	(6) DESCRIPTION AND USABLE ON CODES(UOC)	(7) QTY
					WASHER,LOCK	(1) 397C-5
					WASHER,LOCK	(1) 397D-9
					WASHER,LOCK	(1) 397E-8
					WASHER,SLOTTED	(1) 397A-21
					WIRE,ELECTRICAL	(1) 397B-2
					WIRE,ELECTRICAL	(1) 397B-20

END OF FIGURE

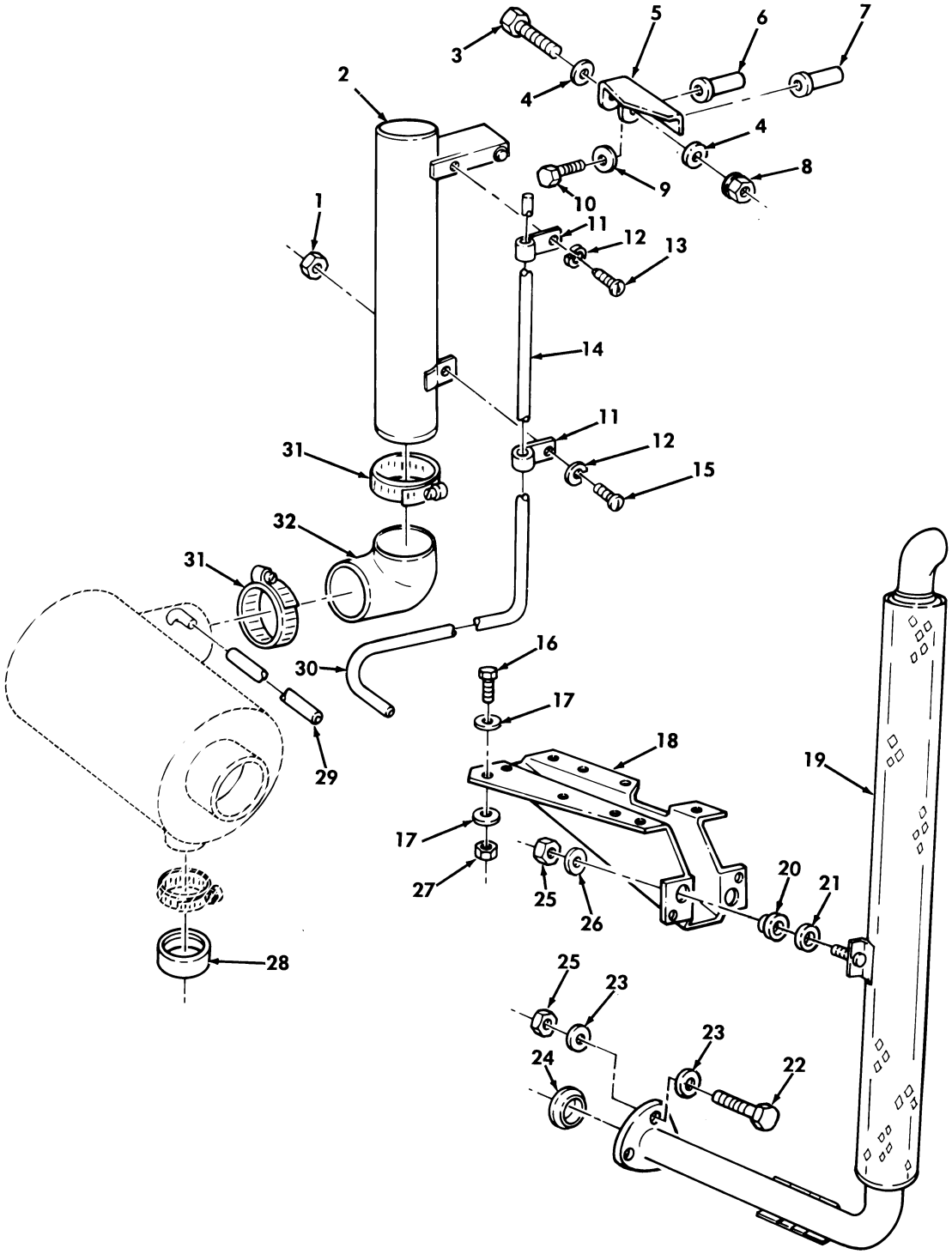

Figure 398. Deep Water Fording Kit, Intake and Exhaust Systems.

(1) ITEM NO	(2) SMR CODE	(3) NSN	(4) CAGEC	(5) PART NUMBER	(6) DESCRIPTION AND USABLE ON CODES(UOC)	(7) QTY
					GROUP 3305 DEEP WATER FORDING KITS	
					FIG. 398 DEEP WATER FORDING KIT, INTAKE AND EXHAUST SYSTEMS	
1	PAOZZ	5310012490899	96906	MS51470-03	NUT,PLAIN,HEXAGON #10-32 PART OF KIT P/N 5705693..... UOC:AVY,A11,A13,A14,A20,A24,A25,A26, A27,BVY,B16,B17,B18,B20,B24,B25,C17, HVY,H11,H13,H14,H16,H17,H18,H20,H21, H24,H25,H26,H27,H28,MMM,NNN	1
2	PFOZZ	2510011980333	19207	12339843	STACK ASSEMBLY PART OF KIT P/N 5705693..... UOC:AVY,A11,A13,A14,A20,A24,A25,A26, A27,BVY,B16,B17,B18,B20,B24,B25,C17, HVY,H11,H13,H14,H16,H17,H18,H20,H21, H24,H25,H26,H27,H28,MMM,NNN	1
3	PAOZZ	5305000695578	96906	MS90725-94	SCREW,CAP,HEXAGON H 7/16-14 X 2.75 PART OF KIT P/N 5705693..... UOC:AVY,A11,A13,A14,A20,A24,A25,A26, A27,BVY,B16,B17,B18,B20,B24,B25,C17, HVY,H11,H13,H14,H16,H17,H18,H20,H21, H24,H25,H26,H27,H28,MMM,NNN	1
4	PAOZZ	5310008094085	96906	MS27183-16	WASHER,FLAT 7/16 PART OF KIT P/N 5705693..... UOC:AVY,A11,A13,A14,A20,A24,A25,A26, A27,BVY,B16,B17,B18,B20,B24,B25,C17, HVY,H11,H13,H14,H16,H17,H18,H20,H21, H24,H25,H26,H27,H28,MMM,NNN	2
5	PFOZZ	5340012389543	19207	12339832	BRACKET,MOUNTING PART OF KIT P/N 5705693..... UOC:AVY,A11,A13,A14,A20,A24,A25,A26, A27,BVY,B16,B17,B18,B20,B24,B25,C17, HVY,H11,H13,H14,H16,H17,H18,H20,H21, H24,H25,H26,H27,H28,MMM,NNN	1
6	PFOZZ	5310012317455	19207	12339397-3	NUT,PLAIN,BLIND RIV 1/4-20 PART OF KIT P/N 5705693..... UOC:AVY,A11,A13,A14,A20,A24,A25,A26, A27,BVY,B16,B17,B18,B20,B24,B25,C17, HVY,H11,H13,H14,H16,H17,H18,H20,H21, H24,H25,H26,H27,H28,MMM,NNN	1
7	PAOZZ	5310013886205	19207	12339397-6	NUT,PLAIN,BLIND RIV 1/4-20 PART OF KIT P/N 5705693..... UOC:AVY,A11,A13,A14,A20,A24,A25,A26, A27,BVY,B16,B17,B18,B20,B24,B25,C17, HVY,H11,H13,H14,H16,H17,H18,H20,H21, H24,H25,H26,H27,H28,MMM,NNN	1
8	PAOZZ	5310011504003	24617	9422299	NUT,SELF-LOCKING,HE 7/16-14 PART OF KIT P/N 5705693..... UOC:AVY,A11,A13,A14,A20,A24,A25,A26, A27,BVY,B16,B17,B18,B20,B24,B25,C17, HVY,H11,H13,H14,H16,H17,H18,H20,H21, H24,H25,H26,H27,H28,MMM,NNN	1

(1) ITEM NO	(2) SMR CODE	(3) NSN	(4) CAGEC	(5) PART NUMBER	(6) DESCRIPTION AND USABLE ON CODES(UOC)	(7) QTY
9	PAOZZ	5310008775975	19207	10918603	WASHER,FLAT 1/4 PART OF KIT P/N 5705693..... UOC:AVY,A11,A13,A14,A20,A24,A25,A26, A27,BVY,B16,B17,B18,B20,B24,B25,C17, HVY,H11,H13,H14,H16,H17,H18,H20,H21, H24,H25,H26,H27,H28,MMM,NNN	2
10	PAOZZ	5305000680509	80204	B1821BH025C125N	SCREW,CAP,HEXAGON H 1/4-20 X 1.25 PART OF KIT P/N 5705693..... UOC:AVY,A11,A13,A14,A20,A24,A25,A26, A27,BVY,B16,B17,B18,B20,B24,B25,C17, HVY,H11,H13,H14,H16,H17,H18,H20,H21, H24,H25,H26,H27,H28,MMM,NNN	2
11	PAOZZ	5340000797837	96906	MS21333-67	CLAMP,LOOP PART OF KIT P/N 5705693.. UOC:AVY,A11,A13,A14,A20,A24,A25,A26, A27,BVY,B16,B17,B18,B20,B24,B25,C17, HVY,H11,H13,H14,H16,H17,H18,H20,H21, H24,H25,H26,H27,H28,MMM,NNN	2
12	PAOZZ	5310007217809	96906	MS35340-43	WASHER,LOCK #10 PART OF KIT P/N 5705693..... UOC:AVY,A11,A13,A14,A20,A24,A25,A26, A27,BVY,B16,B17,B18,B20,B24,B25,C17, HVY,H11,H13,H14,H16,H17,H18,H20,H21, H24,H25,H26,H27,H28,MMM,NNN	2
13	PAOZZ	5305012542461	34623	5592899	SCREW,TAPPING,THREA #10-32 X 1/2 PART OF KIT P/N 5705693..... UOC:AVY,A11,A13,A14,A20,A24,A25,A26, A27,BVY,B16,B17,B18,B20,B24,B25,C17, HVY,H11,H13,H14,H16,H17,H18,H20,H21, H24,H25,H26,H27,H28,MMM,NNN	1
14	PFOZZ	4710012096746	34623	12339833	TUBE,BENT,METALLIC PART OF KIT P/N 5705693..... UOC:AVY,A11,A13,A14,A20,A24,A25,A26, A27,BVY,B16,B17,B18,B20,B24,B25,C17, HVY,H11,H13,H14,H16,H17,H18,H20,H21, H24,H25,H26,H27,H28,MMM,NNN	1
15	PAOZZ	5305009897434	96906	MS35207-263	SCREW,MACHINE #10-32 X 1/2 PART OF KIT P/N 5705693..... UOC:AVY,A11,A13,A14,A20,A24,A25,A26, A27,BVY,B16,B17,B18,B20,B24,B25,C17, HVY,H11,H13,H14,H16,H17,H18,H20,H21, H24,H25,H26,H27,H28,MMM,NNN	1
16	PAOZZ	5305000680502	96906	MS90725-6	SCREW,CAP,HEXAGON H 1/4-20 X 3/4 PART OF KIT P/N 5705693..... UOC:AVY,A11,A13,A14,A20,A24,A25,A26, A27,BVY,B16,B17,B18,B20,B24,B25,C17, HVY,H11,H13,H14,H16,H17,H18,H20,H21, H24,H25,H26,H27,H28,MMM,NNN	8
17	PAOZZ	5310011023270	24617	2436161	WASHER,FLAT 1/4 PART OF KIT P/N 5705693..... UOC:AVY,A11,A13,A14,A20,A24,A25,A26, A27,BVY,B16,B17,B18,B20,B24,B25,C17, HVY,H11,H13,H14,H16,H17,H18,H20,H21, H24,H25,H26,H27,H28,MMM,NNN	16

(1) ITEM NO	(2) SMR CODE	(3) NSN	(4) CAGEC	(5) PART NUMBER	(6) DESCRIPTION AND USABLE ON CODES(UOC)	(7) QTY
18	PFOZZ	5340011857959	19207	12339848	BRACKET,PIPE PART OF KIT P/N 5705693 UOC:AVY,A11,A13,A14,A20,A24,A25,A26, A27,BVY,B16,B17,B18,B20,B24,B25,C17, HVY,H11,H13,H14,H16,H17,H18,H20,H21, H24,H25,H26,H27,H28,MMM,NNN	1
19	PAOZZ	2990012102176	19207	12339849	PIPE,EXHAUST PART OF KIT P/N 5705693 UOC:AVY,A11,A13,A14,A20,A24,A25,A26, A27,BVY,B16,B17,B18,B20,B24,B25,C17, HVY,H11,H13,H14,H16,H17,H18,H20,H21, H24,H25,H26,H27,H28,MMM,NNN	1
20	PFOZZ	5365012135739	34623	5584575-B	BUSHING,NONMETALLIC PART OF KIT P/N 5705693..... UOC:AVY,A11,A13,A14,A20,A24,A25,A26, A27,BVY,B16,B17,B18,B20,B24,B25,C17, HVY,H11,H13,H14,H16,H17,H18,H20,H21, H24,H25,H26,H27,H28,MMM,NNN	2
21	PAOZZ	5310012987770	3M915	5596167	WASHER,FLAT 3/8 PART OF KIT P/N 5705693..... UOC:AVY,A11,A13,A14,A20,A24,A25,A26, A27,BVY,B16,B17,B18,B20,B24,B25,C17, HVY,H11,H13,H14,H16,H17,H18,H20,H21, H24,H25,H26,H27,H28,MMM,NNN	2
22	PAOZZ	5305007829489	80204	B1821BH038C200N	SCREW,CAP,HEXAGON H 3/8-16 X 2.00 PART OF KIT P/N 5705693..... UOC:AVY,A11,A13,A14,A20,A24,A25,A26, A27,BVY,B16,B17,B18,B20,B24,B25,C17, HVY,H11,H13,H14,H16,H17,H18,H20,H21, H24,H25,H26,H27,H28,MMM,NNN	3
23	PAOZZ	5310000877493	96906	MS27183-13	WASHER,FLAT 3/8 PART OF KIT P/N 5705693..... UOC:AVY,A11,A13,A14,A20,A24,A25,A26, A27,BVY,B16,B17,B18,B20,B24,B25,C17, HVY,H11,H13,H14,H16,H17,H18,H20,H21, H24,H25,H26,H27,H28,MMM,NNN	6
24	PFOZZ	5330012000466	19207	12338339	GASKET PART OF KIT P/N 5705693..... UOC:AVY,A11,A13,A14,A20,A24,A25,A26, A27,BVY,B16,B17,B18,B20,B24,B25,C17, HVY,H11,H13,H14,H16,H17,H18,H20,H21, H24,H25,H26,H27,H28,MMM,NNN	1
25	PAOZZ	5310009359021	96906	MS51943-35	NUT,SELF-LOCKING,HE 3/8-16 PART OF KIT P/N 5705693..... UOC:AVY,A11,A13,A14,A20,A24,A25,A26, A27,BVY,B16,B17,B18,B20,B24,B25,C17, HVY,H11,H13,H14,H16,H17,H18,H20,H21, H24,H25,H26,H27,H28,MMM,NNN	5
26	PAOZZ	5310012581536	0MAY0	5593221	WASHER,FLAT 3/8 PART OF KIT P/N 5705693..... UOC:AVY,A11,A13,A14,A20,A24,A25,A26, A27,BVY,B16,B17,B18,B20,B24,B25,C17, HVY,H11,H13,H14,H16,H17,H18,H20,H21, H24,H25,H26,H27,H28,MMM,NNN	2
27	PAOZZ	5310000614650	96906	MS51943-31	NUT,SELF-LOCKING,HE 1/4-20 PART OF KIT P/N 5705693.....	8

(1) ITEM NO	(2) SMR CODE	(3) NSN	(4) CAGEC	(5) PART NUMBER	(6) DESCRIPTION AND USABLE ON CODES(UOC)	(7) QTY
					UOC:AVY,A11,A13,A14,A20,A24,A25,A26, A27,BVY,B16,B17,B18,B20,B24,B25,C17, HVY,H11,H13,H14,H16,H17,H18,H20,H21, H24,H25,H26,H27,H28,MMM,NNN	
28	PAOZZ	5340011972382	19207	12339996	CAP,PROTECTIVE,DUST PART OF KIT P/N 5705693..... UOC:AVY,A11,A13,A14,A20,A24,A25,A26, A27,BVY,B16,B17,B18,B24,B25,C17,HVY, H11,H13,H14,H15,H16,H17,H18,H20,H21, H24,H25,H26,H27,H28,MMM,NNN	1
29	MOOZZ		34623	5591707	TUBE MAKE FROM TUBE,P/N CPR104420-1,70 INCHES LONG PART OF KIT P/N 5705693..... UOC:AVY,A11,A13,A14,A20,A24,A25,A26, A27,BVY,B16,B17,B18,B20,B24,B25,C17, HVY,H11,H13,H14,H16,H17,H18,H20,H21, H24,H25,H26,H27,H28,MMM,NNN	1
30	MOOZZ		34623	5591210	TUBE,NONMETALLIC MAKE FROM TUBE,P/N CPR104420-2,11 INCHES LONG PART OF KIT P/N 5705693..... UOC:AVY,A11,A13,A14,A20,A24,A25,A26, A27,BVY,B16,B17,B18,B20,B24,B25,C17, HVY,H11,H13,H14,H16,H17,H18,H20,H21, H24,H25,H26,H27,H28,MMM,NNN	1
31	PAOZZ	4730003599487	66295	C72P	CLAMP,HOSE PART OF KIT P/N 5705693.. UOC:AVY,A11,A13,A14,A20,A24,A25,A26, A27,BVY,B16,B17,B18,B20,B24,B25,C17, HVY,H11,H13,H14,H16,H17,H18,H20,H21, H24,H25,H26,H27,H28,MMM,NNN	2
32	PAOZZ	4720011945338	34623	5578943	HOSE,PREFORMED PART OF KIT P/N 5705693..... UOC:AVY,A11,A13,A14,A20,A24,A25,A26, A27,BVY,B16,B17,B18,B20,B24,B25,C17, HVY,H11,H13,H14,H16,H17,H18,H20,H21, H24,H25,H26,H27,H28,MMM,NNN	1

END OF FIGURE

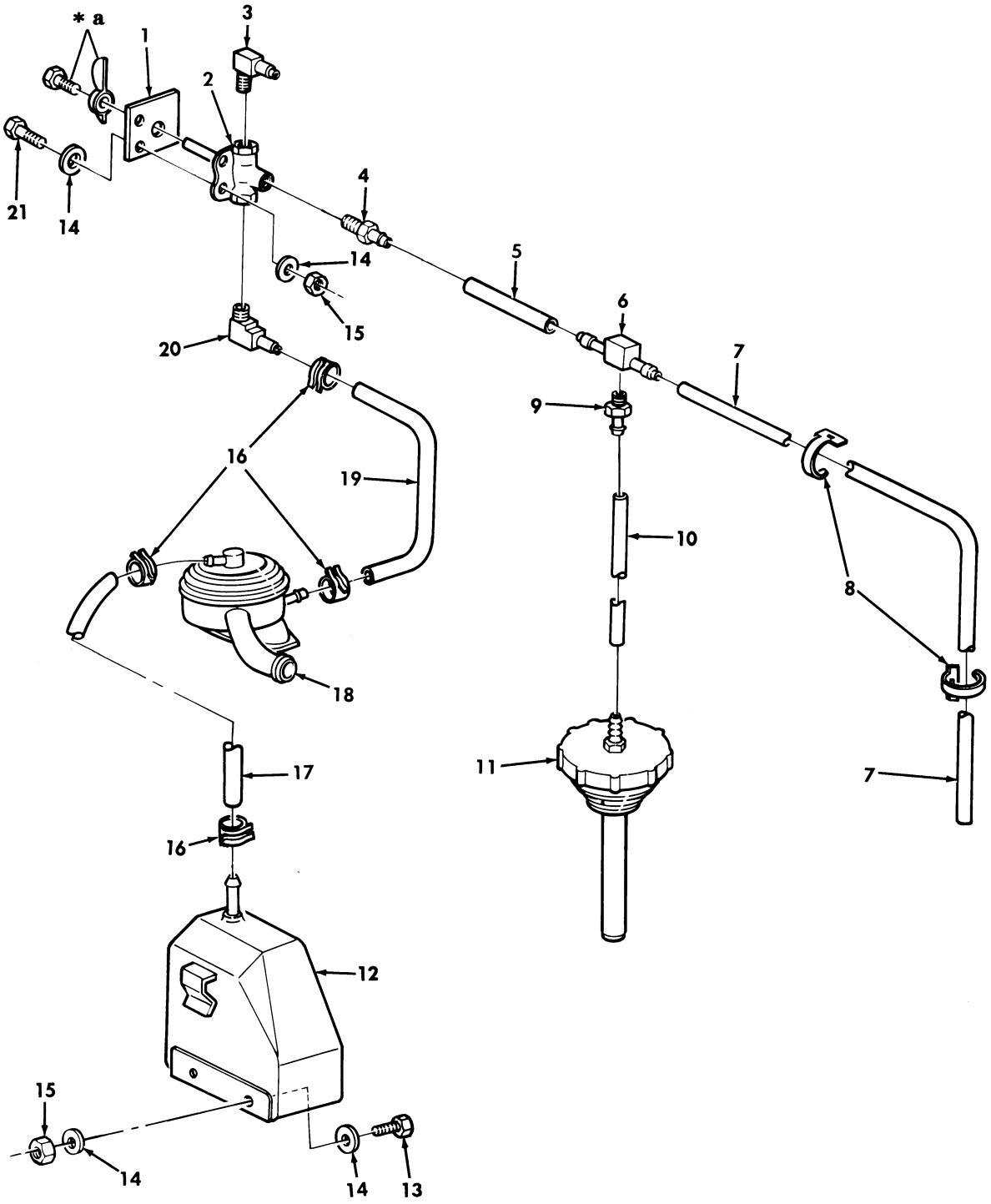

* a PART OF ITEM 2

Figure 399. Deep Water Fording Kit, Selector Valve, Sensor Cup, and Vent Lines.

(1) ITEM NO	(2) SMR CODE	(3) NSN	(4) CAGEC	(5) PART NUMBER	(6) DESCRIPTION AND USABLE ON CODES(UOC)	(7) QTY
					GROUP 3305 DEEP WATER FORDING KITS	
					FIG. 399 DEEP WATER FORDING KIT, SELECTOR VALVE,SENSOR CUP,AND VENT LINES	
1	PAOZZ	9905012058635	19207	12339109	PLATE,IDENTIFICATIO PART OF KIT P/N 5705693..... UOC:AVY,A11,A13,A14,A20,A24,A25,A26, A27,BVY,B16,B17,B18,B20,B24,B25,C17, HVY,H11,H13,H14,H16,H17,H18,H20,H21, H24,H25,H26,H27,H28,MMM,NNN	1
2	PAOZZ	4820011928030	70411	220C-J	VALVE,CROSS PART OF KIT P/N 5705693. UOC:AVY,A11,A13,A14,A20,A24,A25,A26, A27,BVY,B16,B17,B18,B20,B24,B25,C17, HVY,H11,H13,H14,H16,H17,H18,H20,H21, H24,H25,H26,H27,H28,MMM,NNN	1
3	PAOZZ	4730010707680	01989	1069X4	ELBOW,PIPE TO HOSE PART OF KIT P/N 5705693..... UOC:AVY,A11,A13,A14,A20,A24,A25,A26, A27,BVY,B16,B17,B18,B20,B24,B25,C17, HVY,H11,H13,H14,H16,H17,H18,H20,H21, H24,H25,H26,H27,H28,MMM,NNN	1
4	PAOZZ	4730011855348	01989	1068X4	ADAPTER,STRAIGHT,PI PART OF KIT P/N 5705693..... UOC:AVY,A11,A13,A14,A20,A24,A25,A26, A27,BVY,B16,B17,B18,B20,B24,B25,C17, HVY,H11,H13,H14,H16,H17,H18,H20,H21, H24,H25,H26,H27,H28,MMM,NNN	1
5	MOOZZ		34623	5584373	TUBE,NONMETALLIC MAKE FROM TUBE,P/N CPR104420-1, 26 INCHES LONG PART OF KIT P/N 5705693..... UOC:AVY,A11,A13,A14,A20,A24,A25,A26, A27,BVY,B16,B17,B18,B20,B24,B25,C17, HVY,H11,H13,H14,H16,H17,H18,H20,H21, H24,H25,H26,H27,H28,MMM,NNN	1
6	PAOZZ	4730010035105	79470	1064X4	TEE,HOSE PART OF KIT P/N 5705693.... UOC:AVY,A11,A13,A14,A20,A24,A25,A26, A27,BVY,B16,B17,B18,B20,B24,B25,C17, HVY,H11,H13,H14,H16,H17,H18,H20,H21, H24,H25,H26,H27,H28,MMM,NNN	1
7	MOOZZ		34623	5591253	TUBE MAKE FROM TUBE, P/N CPR104420-1, 41 INCHES LONG PART OF KIT P/N 5705693..... UOC:AVY,A11,A13,A14,A20,A24,A25,A26, A27,BVY,B16,B17,B18,B20,B24,B25,C17, HVY,H11,H13,H14,H16,H17,H18,H20,H21, H24,H25,H26,H27,H28,MMM,NNN	1
8	PAOZZ	5340011494434	7X677	3816659	STRAP,LINE SUPPORTI PART OF KIT P/N 5705693..... UOC:AVY,A11,A13,A14,A20,A24,A25,A26, A27,BVY,B16,B17,B18,B20,B24,B25,C17, HVY,H11,H13,H14,H16,H17,H18,H20,H21,	3

(1) ITEM NO	(2) SMR CODE	(3) NSN	(4) CAGEC	(5) PART NUMBER	(6) DESCRIPTION AND USABLE ON CODES(UOC)	(7) QTY
					H24,H25,H26,H27,H28,MMM,NNN	
9	PAOZZ	4730005951078	24869	AM-4X2-B	ADAPTER,STRAIGHT,PI PART OF KIT P/N 5705693..... UOC:AVY,A11,A13,A14,A20,A24,A25,A26, A27,BVY,B16,B17,B18,B20,B24,B25,C17, HVY,H11,H13,H14,H16,H17,H18,H20,H21, H24,H25,H26,H27,H28,MMM,NNN	1
10	MOOZZ		34623	5582644	TUBE MAKE FROM TUBE, P/N CPR104420-1, 20 INCHES LONG PART OF KIT P/N 5705693..... UOC:AVY,A11,A13,A14,A20,A24,A25,A26, A27,BVY,B16,B17,B18,B20,B24,B25,C17, HVY,H11,H13,H14,H16,H17,H18,H20,H21, H24,H25,H26,H27,H28,MMM,NNN	1
11	PAOZZ	2590011924425	19207	12339997	CAP,FILLER OPENING PART OF KIT P/N 5705693..... UOC:AVY,A11,A13,A14,A20,A24,A25,A26, A27,BVY,B16,B17,B18,B20,B24,B25,C17, HVY,H11,H13,H14,H16,H17,H18,H20,H21, H24,H25,H26,H27,H28,MMM,NNN	1
12	PAOZZ	2540011924502	19207	12339845	CUP,SENSOR,DEEP WAT PART OF KIT P/N 5705693..... UOC:AVY,A11,A13,A14,A20,A24,A25,A26, A27,BVY,B16,B17,B18,B20,B24,B25,C17, HVY,H11,H13,H14,H16,H17,H18,H20,H21, H24,H25,H26,H27,H28,MMM,NNN	1
13	PAOZZ	5305000680502	96906	MS90725-6	SCREW,CAP,HEXAGON H 1/4-20 X 3/4 PART OF KIT P/N 5705693..... UOC:AVY,A11,A13,A14,A20,A24,A25,A26, A27,BVY,B16,B17,B18,B20,B24,B25,C17, HVY,H11,H13,H14,H16,H17,H18,H20,H21, H24,H25,H26,H27,H28,MMM,NNN	2
14	PAOZZ	5310011023270	24617	2436161	WASHER,FLAT PART OF KIT P/N 5705693. UOC:AVY,A11,A13,A14,A20,A24,A25,A26, A27,BVY,B16,B17,B18,B20,B24,B25,C17, HVY,H11,H13,H14,H16,H17,H18,H20,H21, H24,H25,H26,H27,H28,MMM,NNN	8
15	PAOZZ	5310000614650	96906	MS51943-31	NUT,SELF-LOCKING,HE 1/4-20 PART OF KIT P/N 5705693..... UOC:AVY,A11,A13,A14,A20,A24,A25,A26, A27,BVY,B16,B17,B18,B20,B24,B25,C17, HVY,H11,H13,H14,H16,H17,H18,H20,H21, H24,H25,H26,H27,H28,MMM,NNN	4
16	PAOZZ	4730001389201	81348	WW-C-4408	CLAMP,HOSE PART OF KIT P/N 5705693.. UOC:AVY,A11,A13,A14,A20,A24,A25,A26, A27,BVY,B16,B17,B18,B20,B24,B25,C17, HVY,H11,H13,H14,H16,H17,H18,H20,H21, H24,H25,H26,H27,H28,MMM,NNN	4
17	MOOZZ		34623	12339981-2	HOSE,NONMETALLIC MAKE FROM HOSE,P/N RB1450-1-4IDX1-20D, 25 INCHES LONG PART OF KIT P/N 5705693..... UOC:AVY,A11,A13,A14,A20,A24,A25,A26, A27,BVY,B16,B17,B18,B20,B24,B25,C17,	1

(1) ITEM NO	(2) SMR CODE	(3) NSN	(4) CAGEC	(5) PART NUMBER	(6) DESCRIPTION AND USABLE ON CODES(UOC)	(7) QTY
					HVY,H11,H13,H14,H16,H17,H18,H20,H21, H24,H25,H26,H27,H28,MMM,NNN	
18	PAOZZ	4820011927678	70040	25043364	VALVE,VENT PART OF KIT P/N 5705693.. UOC:AVY,A11,A13,A14,A20,A24,A25,A26, A27,BVY,B16,B17,B18,B20,B24,B25,C17, HVY,H11,H13,H14,H16,H17,H18,H20,H21, H24,H25,H26,H27,H28,MMM,NNN	1
19	MOOZZ		34623	5583855	HOSE MAKE FROM HOSE, P/N RB1450-1-4IDX1-20D, 42 INCHES LONG PART OF KIT P/N 5705693..... UOC:AVY,A11,A13,A14,A20,A24,A25,A26, A27,BVY,B16,B17,B18,B20,B24,B25,C17, HVY,H11,H13,H14,H16,H17,H18,H20,H21, H24,H25,H26,H27,H28,MMM,NNN	1
20	PAOZZ	4730012004277	79470	1582	ELBOW,PIPE TO HOSE PART OF KIT P/N 5705693..... UOC:AVY,A11,A13,A14,A20,A24,A25,A26, A27,BVY,B16,B17,B18,B20,B24,B25,C17, HVY,H11,H13,H14,H16,H17,H18,H20,H21, H24,H25,H26,H27,H28,MMM,NNN	1
21	PAOZZ	5305000680508	80204	B1821BH025C075N	SCREW,CAP,HEXAGON H PART OF KIT P/N 5705693..... UOC:AVY,A11,A13,A14,A20,A24,A25,A26, A27,BVY,B16,B17,B18,B20,B24,B25,C17, HVY,H11,H13,H14,H16,H17,H18,H20,H21, H24,H25,H26,H27,H28	2

END OF FIGURE

1—2 5—6

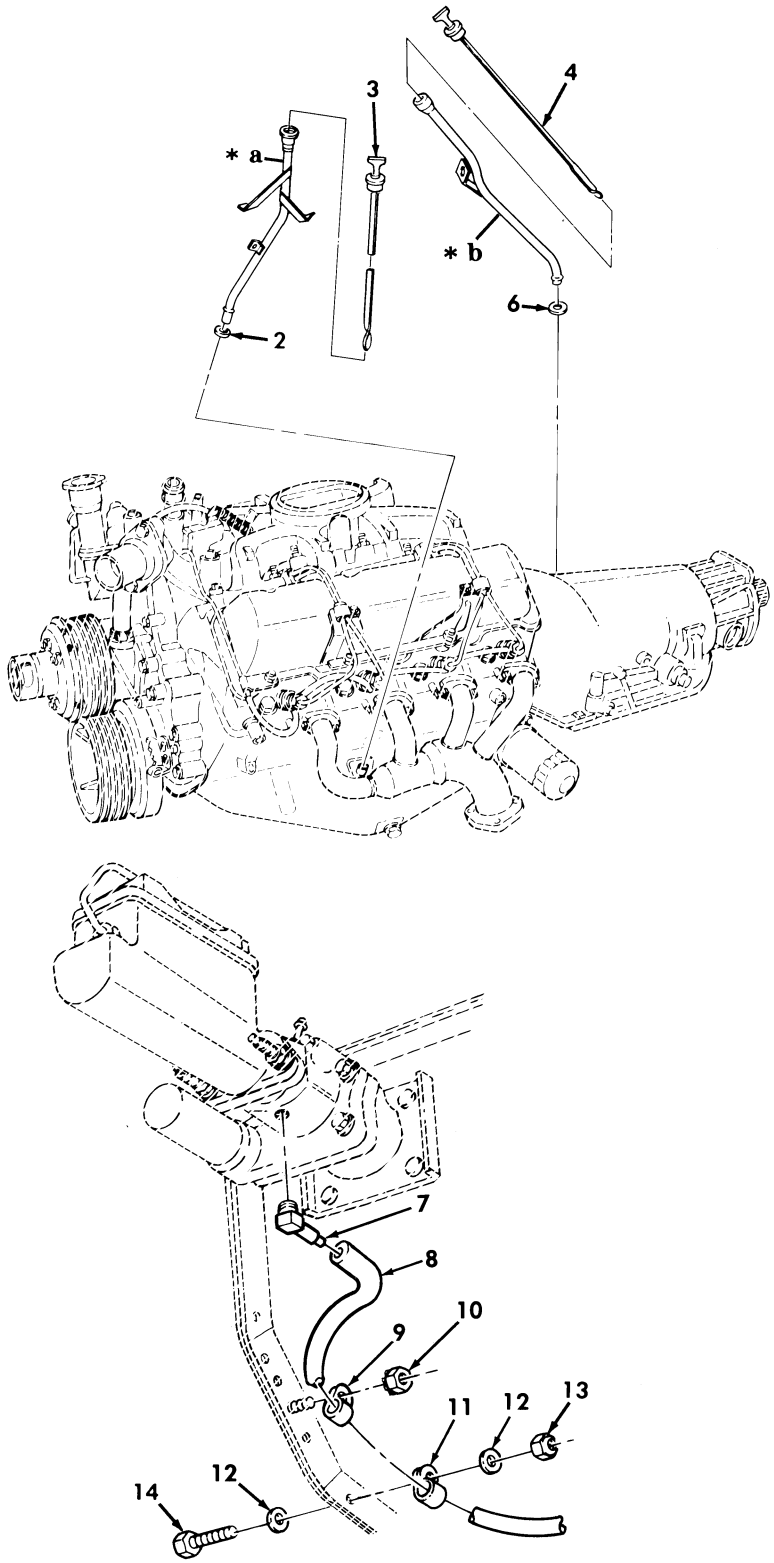

* a PART OF ITEM 1
* b PART OF ITEM 5

Figure 400. Deep Water Fording Kit, Hydro-Boost Vent Line, Engine and Transmission Dipstick, and Tube Assemblies

(1) ITEM NO	(2) SMR CODE	(3) NSN	(4) CAGEC	(5) PART NUMBER	(6) DESCRIPTION AND USABLE ON CODES(UOC)	(7) QTY
					GROUP 3305 DEEP WATER FORDING KITS	
					FIG. 400 DEEP WATER FORDING KIT, HYDRO-BOOST VENT LINE,ENGINE AND TRANSMISSION DIPSTICK,AND TUBE ASSEMBLIES	
1	PFOZZ	4710012028245	19207	12339844	TUBE ASSEMBLY,METAL PART OF KIT P/N 5705693..... UOC:AVY,A11,A13,A14,A20,A24,A25,A26, A27,BVY,B16,B17,B18,B20,B24,B25,C17, HVY,H11,H13,H14,H16,H17,H18,H20,H21, H24,H25,H26,H27,H28,MMM,NNN	1
2	PAOZZ	5331009359136	11862	274244	.O-RING..... UOC:AVY,A11,A13,A14,A20,A24,A25,A26, A27,BVY,B16,B17,B18,B20,B24,B25,C17, HVY,H11,H13,H14,H16,H17,H18,H20,H21, H24,H25,H26,H27,H28,MMM,NNN	1
3	PAOZZ	6680011853202	19207	12339846	GAGE ROD-CAP,LIQUID PART OF KIT P/N 5705693..... UOC:AVY,A11,A13,A14,A20,A24,A25,A26, A27,BVY,B16,B17,B18,B20,B24,B25,C17, HVY,H11,H13,H14,H16,H17,H18,H20,H21, H24,H25,H26,H27,H28,MMM,NNN	1
4	PAOZZ	6680014667238	19207	12460314	GAGE ROD-CAP,LIQUID..... UOC:BVY,B20,B24,B25,C17,NNN	1
4	PAOZZ	6680011794349	34623	5582843	GAGE ROD-CAP,LIQUID PART OF KIT P/N 5705693..... UOC:AVY,A11,A13,A14,A20,A24,A25,A26, A27,B16,B17,B18,HVY,H11,H13,H14,H16, H17,H18,H20,H21,H24,H25,H26,H27,H28, MMM	1
5	PAOZZ	4710011794346	19207	12339147-2	TUBE,BENT,METALLIC PART OF KIT P/N 5705693..... UOC:AVY,A11,A13,A14,A20,A24,A25,A26, A27,BVY,B16,B17,B18,B20,B24,B25,C17, HVY,H11,H13,H14,H16,H17,H18,H20,H21, H24,H25,H26,H27,H28,MMM,NNN	1
6	PAOZZ	5330011846492	02697	2-113N497-70	.PACKING,PREFORMED..... UOC:AVY,A11,A13,A14,A20,A24,A25,A26, A27,BVY,B16,B17,B18,B20,B24,B25,C17, HVY,H11,H13,H14,H16,H17,H18,H20,H21, H24,H25,H26,H27,H28,MMM,NNN	1
7	PAOZZ	4730011953803	01989	1069X4X1	ELBOW,PIPE TO HOSE PART OF KIT P/N 5705693..... UOC:AVY,A11,A13,A14,A20,A24,A25,A26, A27,BVY,B16,B17,B18,B20,B24,B25,C17, HVY,H11,H13,H14,H16,H17,H18,H20,H21, H24,H25,H26,H27,H28,MMM,NNN	1
8	MOOZZ		34623	5582644	TUBE MAKE FROM TUBE, P/N CPR104420-1, 20 INCHES LONG PART OF KIT P/N 5705693..... UOC:AVY,A11,A13,A14,A20,A24,A25,A26,	1

(1) ITEM NO	(2) SMR CODE	(3) NSN	(4) CAGEC	(5) PART NUMBER	(6) DESCRIPTION AND USABLE ON CODES(UOC)	(7) QTY
					A27,BVY,B16,B17,B18,B20,B24,B25,C17, HVY,H11,H13,H14,H16,H17,H18,H20,H21, H24,H25,H26,H27,H28,MMM,NNN	
9	PAOZZ	5340000797837	96906	MS21333-67	CLAMP,LOOP PART OF KIT P/N 5705693.. UOC:AVY,A11,A13,A14,A20,A24,A25,A26, A27,BVY,B16,B17,B18,B20,B24,B25,C17, HVY,H11,H13,H14,H16,H17,H18,H20,H21, H24,H25,H26,H27,H28,MMM,NNN	1
10	PAOZZ	5310001249265	72582	271169	NUT,PLAIN,ASSEMBLED PART OF KIT P/N 5705693..... UOC:AVY,A11,A13,A14,A20,A24,A25,A26, A27,BVY,B16,B17,B18,B20,B24,B25,C17, HVY,H11,H13,H14,H16,H17,H18,H20,H21, H24,H25,H26,H27,H28,MMM,NNN	1
11	PAOZZ	5340008091490	96906	MS21333-98	CLAMP,LOOP PART OF KIT P/N 5705693.. UOC:AVY,A11,A13,A14,A20,A24,A25,A26, A27,BVY,B16,B17,B18,B20,B24,B25,C17, HVY,H11,H13,H14,H16,H17,H18,H20,H21, H24,H25,H26,H27,H28,MMM,NNN	1
12	PAOZZ	5310011023270	24617	2436161	WASHER,FLAT 1/4 PART OF KIT P/N 5705693..... UOC:AVY,A11,A13,A14,A20,A24,A25,A26, A27,BVY,B16,B17,B18,B20,B24,B25,C17, HVY,H11,H13,H14,H16,H17,H18,H20,H21, H24,H25,H26,H27,H28,MMM,NNN	2
13	PAOZZ	5310000614650	96906	MS51943-31	NUT,SELF-LOCKING,HE 1/4-20 PART OF KIT P/N 5705693..... UOC:AVY,A11,A13,A14,A20,A24,A25,A26, A27,BVY,B16,B17,B18,B20,B24,B25,C17, HVY,H11,H13,H14,H16,H17,H18,H20,H21, H24,H25,H26,H27,H28,MMM,NNN	1
14	PAOZZ	5305000680502	96906	MS90725-6	SCREW,CAP,HEXAGON H 1/4-20 X 3/4 PART OF KIT P/N 5705693..... UOC:AVY,A11,A13,A14,A20,A24,A25,A26, A27,BVY,B16,B17,B18,B20,B24,B25,C17, HVY,H11,H13,H14,H16,H17,H18,H20,H21, H24,H25,H26,H27,H28,MMM,NNN	1
KIT	PDOZZ	2590013195435	34623	5705693	MODIFICATION KIT,VE..... UOC:AVY,A11,A13,A14,A20,A24,A25,A26, A27,BVY,B16,B17,B18,B20,B24,B25,C17, HVY,H11,H13,H14,H16,H17,H18,H20,H21, H24,H25,H26,H27,H28,MMM,NNN	1
					ADAPTER,STRAIGHT,PI(1) 399-4	
					ADAPTER,STRAIGHT,PI(1) 399-9	
					BRACKET,MOUNTING (1) 398-5	
					BRACKET,PIPE (1) 398-18	
					BUSHING,NONMETALLIC(2) 398-20	
					CAP,FILLER OPENING (1) 399-11	
					CAP,PROTECTIVE,DUST(1) 398-28	
					CLAMP,HOSE (2) 398-31	
					CLAMP,HOSE (4) 399-16	
					CLAMP,LOOP (1) 400-9	
					CLAMP,LOOP (1) 400-11	

(1) ITEM NO	(2) SMR CODE	(3) NSN	(4) CAGEC	(5) PART NUMBER	(6) DESCRIPTION AND USABLE ON CODES(UOC)	(7) QTY
					CLAMP,LOOP (2) 398-11	
					CUP,SENSOR,DEEP WAT(1) 399-12	
					ELBOW,PIPE TO HOSE (1) 399-3	
					ELBOW,PIPE TO HOSE (1) 399-20	
					ELBOW,PIPE TO HOSE (1) 400-7	
					GAGE ROD-CAP,LIQUID(1) 400-3	
					GAGE ROD-CAP,LIQUID(1) 400-4	
					GAGE ROD-CAP,LIQUID(1) 400-4	
					GASKET (1) 398-24	
					HOSE (1) 399-19	
					HOSE,NONMETALLIC (1) 399-17	
					HOSE,PREFORMED (1) 398-32	
					NUT,PLAIN,ASSEMBLED(1) 400-10	
					NUT,PLAIN,HEXAGON (1) 398-1	
					NUT,PLAIN,BLIND RIV(1) 398-6	
					NUT,PLAIN,BLIND RIV(1) 398-7	
					NUT,SELF-LOCKING,HE(1) 400-13	
					NUT,SELF-LOCKING,HE(1) 398-8	
					NUT,SELF-LOCKING,HE(4) 399-15	
					NUT,SELF-LOCKING,HE(5) 398-25	
					NUT,SELF-LOCKING,HE(8) 398-27	
					PIPE,EXHAUST (1) 398-19	
					PLATE,IDENTIFICATIO(1) 399-1	
					SCREW,CAP,HEXAGON H(1) 398-3	
					SCREW,CAP,HEXAGON H(2) 398-10	
					SCREW,CAP,HEXAGON H(2) 399-13	
					SCREW,CAP,HEXAGON H(2) 399-21	
					SCREW,CAP,HEXAGON H(1) 400-14	
					SCREW,CAP,HEXAGON H(8) 398-16	
					SCREW,CAP,HEXAGON H(3) 398-22	
					SCREW,MACHINE (1) 398-15	
					SCREW,TAPPING,THREA(1) 398-13	
					STACK ASSEMBLY (1) 398-2	
					STRAP,LINE SUPPORTI(3) 399-8	
					TEE,HOSE (1) 399-6	
					TUBE (1) 398-29	
					TUBE (1) 400-8	
					TUBE (1) 399-10	
					TUBE (1) 399-7	
					TUBE ASSEMBLY,METAL(1) 400-1	
					TUBE,BENT,METALLIC (1) 400-5	
					TUBE,BENT,METALLIC (1) 398-14	
					TUBE,NONMETALLIC (1) 399-5	
					TUBE,NONMETALLIC (1) 398-30	
					VALVE,CROSS (1) 399-2	
					VALVE,VENT (1) 399-18	
					WASHER,FLAT (2) 400-12	
					WASHER,FLAT (2) 398-21	
					WASHER,FLAT (2) 398-9	
					WASHER,FLAT (2) 398-4	
					WASHER,FLAT (8) 399-14	
					WASHER,FLAT (6) 398-23	
					WASHER,FLAT (2) 398-26	

(1) ITEM NO	(2) SMR CODE	(3) NSN	(4) CAGEC	(5) PART NUMBER	(6) DESCRIPTION AND USABLE ON CODES(UOC)	(7) QTY
					WASHER,FLAT (16) 398-17	
					WASHER,LOCK (2) 398-12	

END OF FIGURE

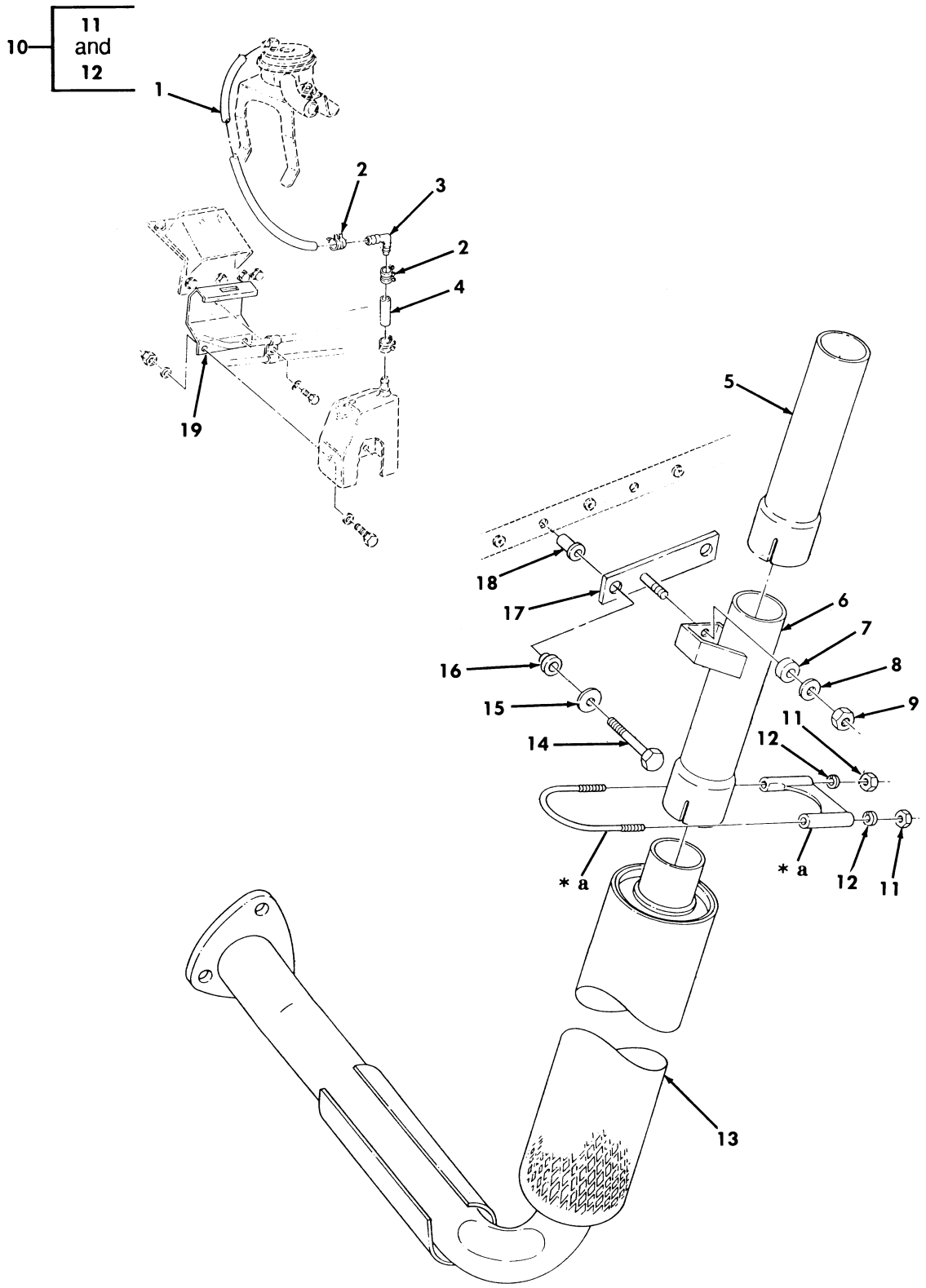

* a PART OF ITEM 10

Figure 401. Supplemental Deep Water Fording Kit.

(1) ITEM NO	(2) SMR CODE	(3) NSN	(4) CAGEC	(5) PART NUMBER	(6) DESCRIPTION AND USABLE ON CODES(UOC)	(7) QTY
					GROUP 3305 DEEP WATER FORDING KITS	
					FIG. 401 SUPPLEMENTAL DEEP WATER FORDING KIT	
* 1	MOOZZ		19207	12339981-5	HOSE,NONMETALLIC MAKE FROM HOSE, P/N 4219-3681, 42 INCHES LONG PART OF KIT P/N 5705703..... UOC:A15,B15,H15	1
2	PAOZA	4730002678945	81348	WW-C-440B TYPE E 1/2	CLAMP,HOSE PART OF KIT P/N 5705703.. UOC:A15,B15,H15	2
3	PAOZZ	4730012984363	61424	P4EUB-4	ELBOW,HOSE PART OF KIT P/N 5705703.. UOC:A15,B15,H15	1
* 4	MOOZZ		19207	12339981-6	HOSE,NONMETALLIC MAKE FROM HOSE,P/N 4219-3681, 2 INCHES LONG PART OF KIT P/N 5705703..... UOC:A15,B15,H15	1
5	PAOZZ	2990013858988	19207	12342567-2	PIPE,EXHAUST PART OF KIT P/N 5705703 UOC:A15,B15,H15	1
6	PAOZZ	2990013828796	19207	12342566	PIPE,EXHAUST PART OF KIT P/N 5705703 UOC:A15,B15,H15	1
7	PAOZZ	5365013811783	19207	12342569	SPACER,SLEEVE PART OF KIT P/N 5705703..... UOC:A15,B15,H15	1
8	PAOZZ	5310000877493	81495	330 2000	WASHER,FLAT 5/16 PART OF KIT P/N 5705703..... UOC:A15,B15,H15	1
9	PAOZZ	5310008140673	96906	MS51943-33	NUT,SELF-LOCKING,HE 5/16-18 PART OF KIT P/N 5705703..... UOC:A15,B15,H15	1
10	PAOZZ	5340013832397	19207	12338343-3	CLAMP,LOOP PART OF KIT P/N 5705703.. UOC:A15,B15,H15	2
11	PAOZZ	5310007320558	96906	MS51967-8	.NUT,PLAIN,HEXAGON 3/8-16..... UOC:A15,B15,H15	2
12	PAOZZ	5310006379541	81718	H2525M	.WASHER,LOCK 3/8..... UOC:A15,B15,H15	2
13	PAOZZ	2990012998820	34623	12342565	PIPE,EXHAUST PART OF KIT P/N 5705703 UOC:A15,B15,H15	1
14	PAOZZ	5305000712236	96906	MS90725-15	SCREW,CAP,HEXAGON H 1/4-20 X 2.25 PART OF KIT P/N 5705703..... UOC:A15,B15,H15	2
15	PAOZZ	5310001670893	88044	AN8013-2	WASHER,FLAT PART OF KIT P/N 5705703. UOC:A15,B15,H15	2
16	PAOZZ	2990013835689	34623	12341027	HANGER,ENGINE EXHAU PART OF KIT P/N 5705703..... UOC:A15,B15,H15	2
17	PAOZZ	5340013812045	19207	12342795	BRACKET,MOUNTING PART OF KIT P/N 5705703..... UOC:A15,B15,H15	1
18	PAOZZ	4931012028692	19207	12339998-13	PLUSNUT PART OF KIT P/N 5705703..... UOC:A15,B15,H15	2
19	PAOZZ	5340013811266	19207	12341641	STRAP,RETAINING PART OF KIT P/N 5705703.....	1

(1) ITEM NO	(2) SMR CODE	(3) NSN	(4) CAGEC	(5) PART NUMBER	(6) DESCRIPTION AND USABLE ON CODES(UOC)	(7) QTY
					UOC:A15,B15,H15	
KIT	PDOZZ	2540013208731	19207	5705703	MODIFICATION KIT,VE.....	1
					UOC:A15,B15,H15	
					BRACKET,MOUNTING (1) 401-17	
					CLAMP,HOSE (2) 401-2	
					CLAMP,LOOP (2) 401-10	
					ELBOW,HOSE (1) 401-3	
					HANGER,ENGINE EXHAU(2) 401-16	
					HOSE,NONMETALLIC (1) 401-1	
					HOSE,NONMETALLIC (1) 401-4	
					NUT,SELF-LOCKING,HE(1) 401-9	
					PIPE,EXHAUST (1) 401-5	
					PIPE,EXHAUST (1) 401-6	
					PIPE,EXHAUST (1) 401-13	
					PLUSNUT (2) 401-18	
					SCREW,CAP,HEXAGON H(2) 401-14	
					SPACER,SLEEVE (1) 401-7	
					STRAP,RETAINING (1) 401-19	
					WASHER,FLAT (1) 401-8	
					WASHER,FLAT (2) 401-15	

END OF FIGURE

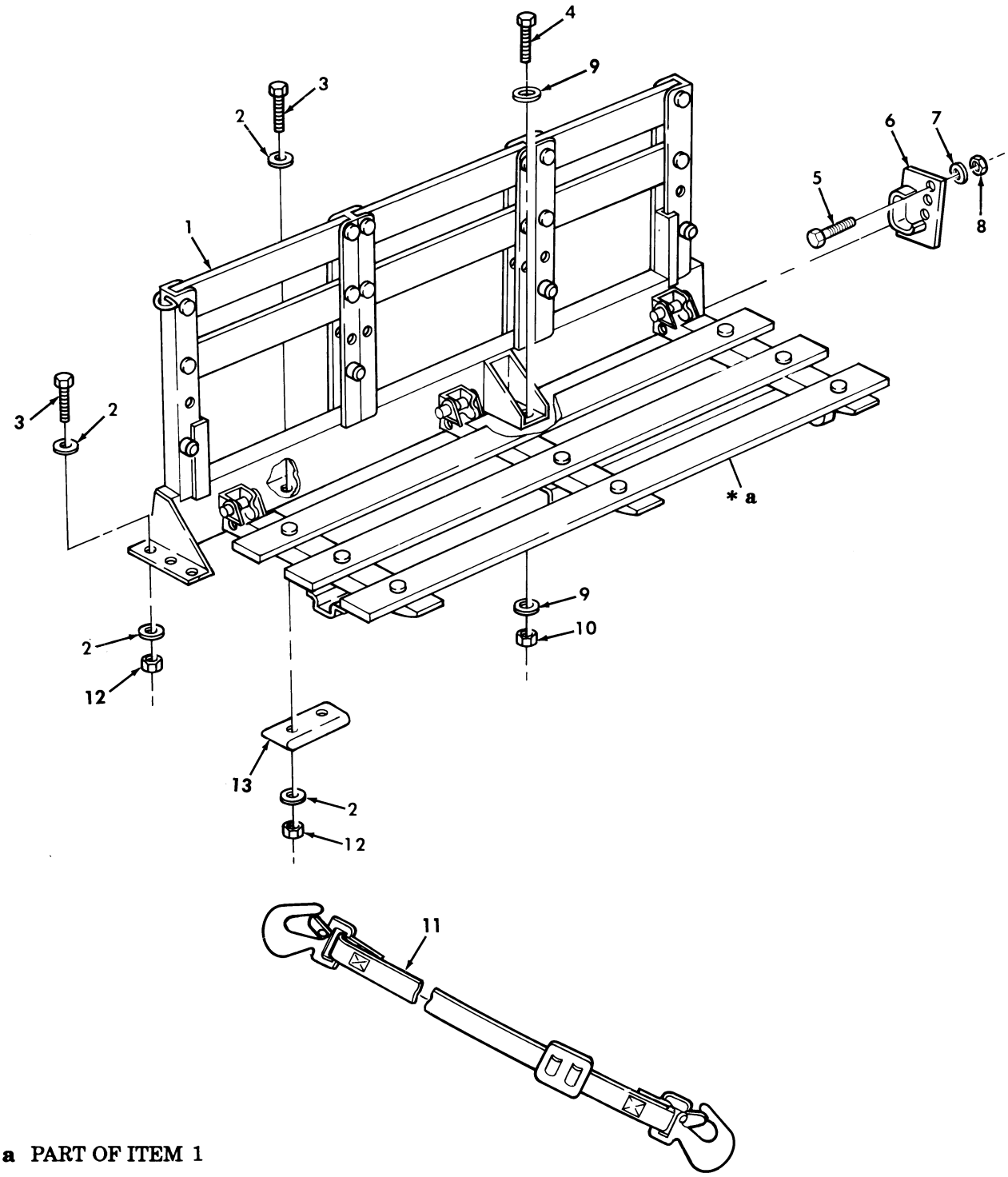

* a PART OF ITEM 1

Figure 402. Troop Seat Kit, Safety Strap, and Mounting Hardware.

(1) ITEM NO	(2) SMR CODE	(3) NSN	(4) CAGEC	(5) PART NUMBER	(6) DESCRIPTION AND USABLE ON CODES(UOC)	(7) QTY
					GROUP 3307 SPECIAL PURPOSE KITS	
					FIG. 402 TROOP SEAT KIT,SAFETY STRAP, AND MOUNTING HARDWARE	
1	PAOOO	2540011858016	19207	12340560-1	SEAT,VEHICULAR L.H.,GREEN,PART OF KIT P/N 12338105..... UOC:AVY,A13,A14,BVY,HPM,HVY,H13,H14, KTV,NNN	1
1	PAOOO	2540011853214	19207	12340560-2	SEAT,VEHICULAR R.H.,GREEN,PART OF KIT P/N 12338105..... UOC:AVY,A13,A14,BVY,HPM,HVY,H13,H14, KTV,NNN	1
1	PAOOO	2540013967759	19207	12340560-3	SEAT,VEHICUALR L.H.,TAN,PART OF KIT P/N 57K0216..... UOC:AVY,A13,A14,BVY,HPM,HVY,H13,H14, KTV,NNN	1
1	PAOOO	2540013990785	19207	12340560-4	SEAT,VEHICULAR R.H.,TAN,PART OF KIT P/N 57K0216..... UOC:AVY,A13,A14,BVY,HPM,HVY,H13,H14, KTV,NNN	1
1	PAOOO	2540013967756	19207	12340560-5	SEAT,VEHICULAR L.H.,WHITE,PART OF KIT P/N 57K0220..... UOC:AVY,A13,A14,BVY,HPM,HVY,H13,H14, KTV,NNN	1
1	PAOOO	2540013967757	19207	12340560-6	SEAT,VEHICULAR R.H.,WHITE,PART OF KIT P/N 57K0220..... UOC:AVY,A13,A14,BVY,HPM,HVY,H13,H14, KTV,NNN	1
2	PAOZZ	5310008094058	96906	MS27183-10	WASHER,FLAT 1/4..... UOC:AVY,A13,A14,BVY,HPM,HVY,H13,H14, KTV,NNN	36
3	PAOZZ	5305000180024	96906	MS35297-10	SCREW,CAP,HEXAGON H 1/4-20 X 1.25.. UOC:AVY,A13,A14,BVY,HPM,HVY,H13,H14, KTV,NNN	18
* 4	PAOZZ	5305013157066	24617	9425339	SCREW,CAP,HEXAGON H 7/16-20 X 3/4, PART OF KIT P/N 12338105,PART OF KIT P/N 57K0216,PART OF KIT P/N 57K0220. UOC:AVY,A13,A14,BVY,HPM,HVY,H13,H14, KTV,NNN	4
5	PAOZZ	5306002258499	96906	MS90725-34	BOLT,MACHINE 5/16-18 X 1.00,PART OF KIT P/N 12338105,PART OF KIT P/N 57K0216,PART OF KIT P/N 57K0220..... UOC:AVY,A13,A14,BVY,HPM,HVY,H13,H14, KTV,NNN	6
6	PAOZZ	2540013949682	19207	12340542-1	SUPPORT,SEAT,VEHICU L.H.,GREEN,PART OF KIT P/N 12338105..... UOC:AVY,A13,A14,BVY,HPM,HVY,H13,H14, KTV,NNN	1
6	PAOZZ	2540013949683	19207	12340542-2	SUPPORT,SEAT,VEHICU R.H.,GREEN,PART OF KIT P/N 12338105..... UOC:AVY,A13,A14,BVY,HPM,HVY,H13,H14, KTV,NNN	1

(1) ITEM NO	(2) SMR CODE	(3) NSN	(4) CAGEC	(5) PART NUMBER	(6) DESCRIPTION AND USABLE ON CODES(UOC)	(7) QTY
6	PAOZZ	2540013944788	19207	12340542-3	SUPPORT,SEAT,VEHICU L.H.,TAN,PART OF KIT P/N 57K0216..... UOC:AVY,A13,A14,BVY,HPM,HVY,H13,H14, KTV,NNN	1
6	PAOZZ	2540013944787	19207	12340542-4	SUPPORT,SEAT,VEHICU R.H.,TAN,PART OF KIT P/N 57K0216..... UOC:AVY,A13,A14,BVY,HPM,HVY,H13,H14, KTV,NNN	1
6	PAOZZ	2540013944792	19207	12340542-5	SUPPORT,SEAT,VEHICU L.H.,WHITE,PART OF KIT P/N 57K0220..... UOC:AVY,A13,A14,BVY,HPM,HVY,H13,H14, KTV,NNN	1
6	PAOZZ	2540013949679	19207	12340542-6	SUPPORT,SEAT,VEHICU R.H.,WHITE,PART OF KIT P/N 57K0220..... UOC:AVY,A13,A14,BVY,HPM,HVY,H13,H14, KTV,NNN	1
7	PAOZZ	5310000814219	96906	MS27183-12	WASHER,FLAT 5/16..... UOC:AVY,A13,A14,BVY,HPM,HVY,H13,H14, KTV,NNN	6
8	PAOZZ	5310002416658	96906	MS51943-34	NUT,SELF-LOCKING,HE 5/16-18,PART OF KIT P/N 12338105,PART OF KIT P/N 57K0216,PART OF KIT P/N 57K0220..... UOC:AVY,A13,A14,BVY,HPM,HVY,H13,H14, KTV,NNN	6
9	PAOZZ	5310008094085	96906	MS27183-16	WASHER,FLAT 7/16,PART OF KIT P/N 12338105,PART OF KIT P/N 57K0216, PART OF KIT P/N 57K0220..... UOC:AVY,A13,A14,BVY,HPM,HVY,H13,H14, KTV,NNN	8
10	PAOZZ	5310013153403	24617	9422300	NUT,PLAIN,HEXAGON 7/16-20,PART OF KIT P/N 12338105,PART OF KIT P/N 57K0216,PART OF KIT P/N 57K0220..... UOC:AVY,A13,A14,BVY,HPM,HVY,H13,H14, KTV,NNN	4
11	PAOZZ	5340011147712	19207	11682088-1	STRAP,WEBBING PART OF KIT P/N 12338105,PART OF KIT P/N 57K0216, PART OF KIT P/N 57K0220..... UOC:AVY,A13,A14,BVY,HPM,HVY,H13,H14, KTV,NNN	1
12	PAOZZ	5310000614650	96906	MS51943-31	NUT,SELF-LOCKING,HE 1/4-20,PART OF KIT P/N 12338105,PART OF KIT P/N 57K0216,PART OF KIT P/N 57K0220..... UOC:AVY,A13,A14,BVY,HPM,HVY,H13,H14, KTV,NNN	18
13	PFOZZ	5340012559510	19207	12339009	PLATE,MENDING..... UOC:AVY,A13,A14,BVY,HPM,HVY,H13,H14, KTV,NNN	6
KIT	PDOZZ	2540011853216	19207	12338105	PARTS KIT,SEAT GREEN..... UOC:AVY,A13,A14,BVY,HPM,HVY,H13,H14, KTV,NNN	1
					BOLT,MACHINE (6) 402-5	
					NUT,PLAIN,HEXAGON (4) 402-10	
					NUT,SELF-LOCKING,HE(6) 402-8	

(1) ITEM NO	(2) SMR CODE	(3) NSN	(4) CAGEC	(5) PART NUMBER	(6) DESCRIPTION AND USABLE ON CODES(UOC)	(7) QTY
					NUT,SELF-LOCKING,HE(18) 402-12	
					SCREW,CAP,HEXAGON H(4) 402-4	
					SEAT,VEHICULAR (1) 402-1	
					SEAT,VEHICULAR (1) 402-1	
					STRAP,WEBBING (1) 402-11	
					SUPPORT,SEAT,VEHICU(1) 402-6	
					SUPPORT,SEAT,VEHICU(1) 402-6	
					WASHER,FLAT (8) 402-9	
KIT	PDOZZ	2540013388081	19207	57K0216	PARTS KIT,SEAT TAN.....	1
					UOC:AVY,A13,A14,BVY,HPM,HVY,H13,H14, KTV,NNN	
					BOLT,MACHINE (6) 402-5	
					NUT,PLAIN,HEXAGON (4) 402-10	
					NUT,SELF-LOCKING,HE(6) 402-8	
					NUT,SELF-LOCKING,HE(18) 402-12	
					SCREW,CAP,HEXAGON H(4) 402-4	
					SEAT,VEHICULAR (1) 402-1	
					SEAT,VEHICULAR (1) 402-1	
					STRAP,WEBBING (1) 402-11	
					SUPPORT,SEAT,VEHICU(1) 402-6	
					SUPPORT,SEAT,VEHICU(1) 402-6	
					WASHER,FLAT (8) 402-9	
KIT	PDOZZ	2540013958771	19207	57K0220	PARTS KIT,SEAT WHITE.....	1
					UOC:AVY,A13,A14,BVY,HPM,HVY,H13,H14, KTV,NNN	
					BOLT,MACHINE (6) 402-5	
					NUT,PLAIN,HEXAGON (4) 402-10	
					NUT,SELF-LOCKING,HE(6) 402-8	
					NUT,SELF-LOCKING,HE(18) 402-12	
					SCREW,CAP,HEXAGON H(4) 402-4	
					SEAT,VEHICULAR (1) 402-1	
					SEAT,VEHICULAR (1) 402-1	
					STRAP,WEBBING (1) 402-11	
					SUPPORT,SEAT,VEHICU(1) 402-6	
					SUPPORT,SEAT,VEHICU(1) 402-6	
					WASHER,FLAT (8) 402-9	

END OF FIGURE

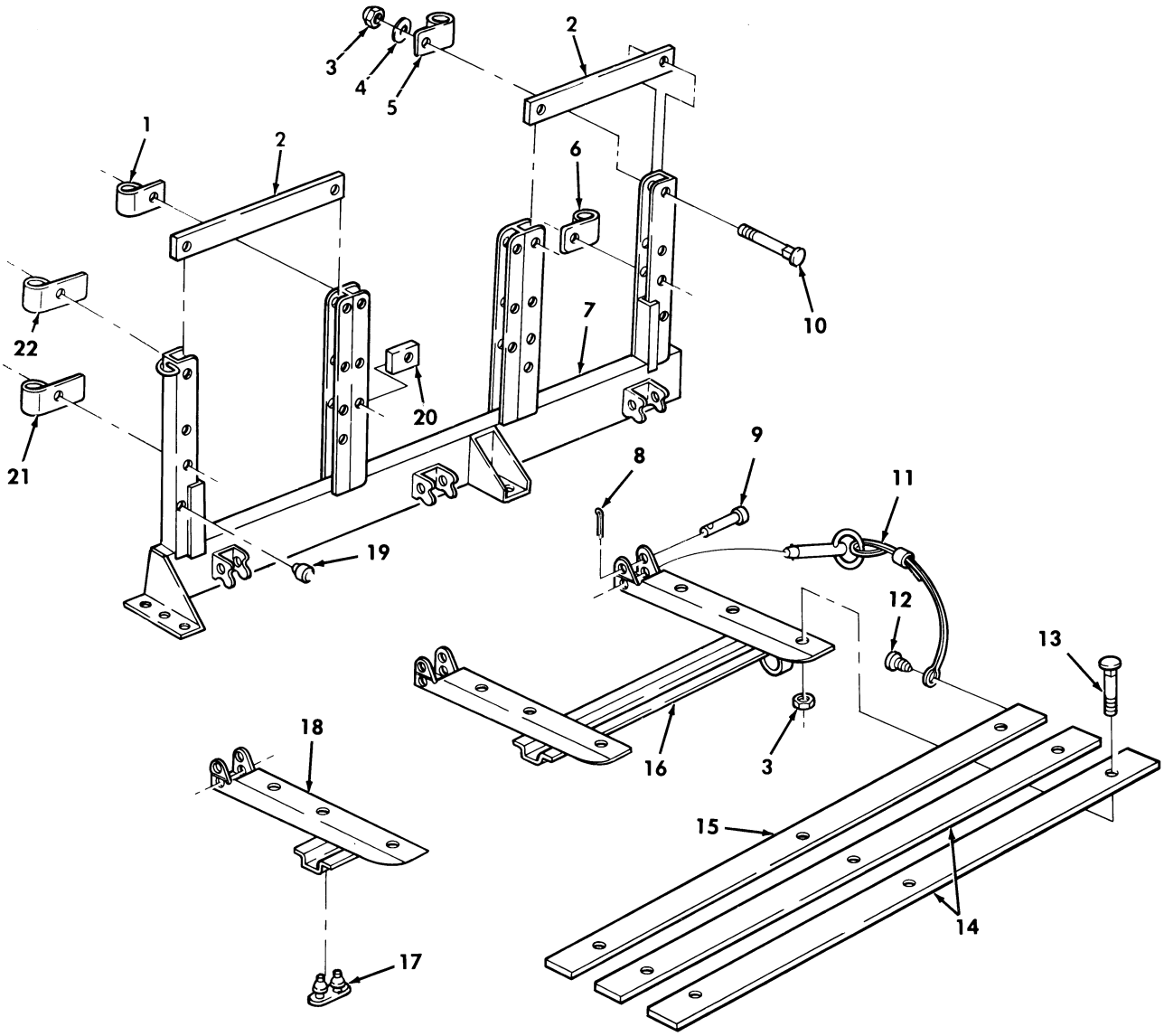

Figure 403. Troop Seat Assembly, Left and Right.

(1) ITEM NO	(2) SMR CODE	(3) NSN	(4) CAGEC	(5) PART NUMBER	(6) DESCRIPTION AND USABLE ON CODES(UOC)	(7) QTY
					GROUP 3307 SPECIAL PURPOSE KITS	
					FIG. 403 TROOP SEAT ASSEMBLY,LEFT AND RIGHT	
1	PAOZZ	2540011929712	34623	5578466	RETAINER ASSEMBLY,B USE ON L.H. SIDE RACK ASSY..... UOC:AVY,A13,A14,BVY,HPM,HVY,H13,H14, KTV,NNN	2
1	PAOZZ	2540011929713	19207	12340545-2	RETAINER ASSEMBLY,B USE ON R.H. SIDE RACK ASSY..... UOC:AVY,A13,A14,BVY,HPM,HVY,H13,H14, KTV,NNN	2
2	PAOZZ	2540011857951	19207	12340544	BOARD SEAT ..... UOC:AVY,A13,A14,BVY,HPM,HVY,H13,H14, KTV,NNN	12
3	PAOZZ	5310009334310	24617	271184	NUT,PLAIN ASSEMBLED 5/16-18..... UOC:AVY,A13,A14,BVY,HPM,HVY,H13,H14, KTV,NNN	50
* 4	PAOZZ	5310011191024	24617	2436162	WASHER,FLAT 5/16..... UOC:AVY,A13,A14,BVY,HPM,HVY,H13,H14, KTV,NNN	32
5	PFOZZ	2540011929711	19207	12340546-1	RETAINER,BOW,VEHICU..... UOC:AVY,A13,A14,BVY,HPM,HVY,H13,H14, KTV,NNN	3
6	PAOZZ	2540011929712	34623	5578466	RETAINER ASSEMBLY,B USE ON R.H. SIDE RACK ASSY..... UOC:AVY,A13,A14,BVY,HPM,HVY,H13,H14, KTV,NNN	1
6	PAOZZ	2540011929713	19207	12340545-2	RETAINER ASSEMBLY,B USE ON L.H. SIDE RACK ASSY..... UOC:AVY,A13,A14,BVY,HPM,HVY,H13,H14, KTV,NNN	1
7	XAOZZ		34623	5591333	CHANNEL ASSEMBLY R.H..... UOC:AVY,A13,A14,BVY,HPM,HVY,H13,H14, KTV,NNN	1
7	XAOZZ		34623	5591334	CHANNEL ASSEMBLY L.H..... UOC:AVY,A13,A14,BVY,HPM,HVY,H13,H14, KTV,NNN	1
8	PAOZZ	5315012677570	96906	MS24665-319	PIN,COTTER 3/32 X 1.00..... UOC:AVY,A13,A14,BVY,HPM,HVY,H13,H14, KTV,NNN	6
9	PAOZZ	5315007370134	19207	7370134	PIN,STRAIGHT,HEADED 3/8 X 2.00..... UOC:AVY,A13,A14,BVY,HPM,HVY,H13,H14, KTV,NNN	6
10	PAOZZ	5306000120231	96906	MS35751-44	BOLT,SQUARE NECK 5/16-18 X 1.75.... UOC:AVY,A13,A14,BVY,HPM,HVY,H13,H14, KTV,NNN	32
11	PAOZZ	5315010949025	19207	12255608	PIN,QUICK RELEASE..... UOC:AVY,A13,A14,BVY,HPM,HVY,H13,H14, KTV,NNN	2
12	PAOZZ	5305004324170	96906	MS51861-35	SCREW,TAPPING #8-18 X 1/2..... UOC:AVY,A13,A14,BVY,HPM,HVY,H13,H14,	2

(1) ITEM NO	(2) SMR CODE	(3) NSN	(4) CAGEC	(5) PART NUMBER	(6) DESCRIPTION AND USABLE ON CODES(UOC)	(7) QTY
					KTV,NNN	
13	PAOZZ	5306007536996	96906	MS35751-43	BOLT,SQUARE NECK 5/16-18 X 1.50.... UOC:AVY,A13,A14,BVY,HPM,HVY,H13,H14, KTV,NNN	18
14	PAOZZ	2540011858015	19207	12340553	BOARD SEAT ..... UOC:AVY,A13,A14,BVY,HPM,HVY,H13,H14, KTV,NNN	4
15	PFOZZ	2540011924501	19207	12340549	SEAT,VEHICULAR..... UOC:AVY,A13,A14,BVY,HPM,HVY,H13,H14, KTV,NNN	2
16	XAOZZ		19207	12340562-1	CHANNEL ASSEMBLY L.H..... UOC:AVY,A13,A14,BVY,HPM,HVY,H13,H14, KTV,NNN	1
16	XAOZZ		19207	12340562-2	CHANNEL ASSEMBLY R.H..... UOC:AVY,A13,A14,BVY,HPM,HVY,H13,H14, KTV,NNN	1
17	PAOZZ	5340011968028	19207	12339961-1	BUMPER,NONMETALLIC..... UOC:AVY,A13,A14,BVY,HPM,HVY,H13,H14, KTV,NNN	6
18	PFOZZ	2540013344333	34623	5588656	SUPPORT,SEAT,VEHICU REAR..... UOC:AVY,A13,A14,BVY,HPM,HVY,H13,H14, KTV,NNN	2
19	PAOZZ	5340011962573	34623	5584977	BUMPER,NONMETALLIC..... UOC:AVY,A13,A14,BVY,HPM,HVY,H13,H14, KTV,NNN	4
20	PAOZZ	5365011934479	34623	5584999	SPACER..... UOC:AVY,A13,A14,BVY,HPM,HVY,H13,H14, KTV,NNN	4
21	PFOZZ	2540011929715	19207	12340535-1	RETAINER ASSEMBLY,B L.H..... UOC:AVY,A13,A14,BVY,HPM,HVY,H13,H14, KTV,NNN	1
21	PFOZZ	2540011929714	19207	12340535-2	RETAINER ASSEMBLY,B R.H..... UOC:AVY,A13,A14,BVY,HPM,HVY,H13,H14, KTV,NNN	1
22	PAOZZ	2540011932711	19207	12340536-1	RETAINER,BOW,VEHICU..... UOC:AVY,A13,A14,BVY,HPM,HVY,H13,H14, KTV,NNN	1

END OF FIGURE

DELETED

Figure 404. Alternator, 100 AMP Kit (PRESTOLITE).

(1) ITEM NO	(2) SMR CODE	(3) NSN	(4) CAGEC	(5) PART NUMBER	(6) DESCRIPTION AND USABLE ON CODES(UOC)	(7) QTY
					GROUP 3307 SPECIAL PURPOSE KITS	
					FIG. 404 ALTERNATOR,100 AMP KIT (PRESTOLITE)	

DELETED

DELETED

Figure 405. Alternator, 100 AMP Kit (NIEHOFF).

(1) ITEM NO	(2) SMR CODE	(3) NSN	(4) CAGEC	(5) PART NUMBER	(6) DESCRIPTION AND USABLE ON CODES(UOC)	(7) QTY
					GROUP 3307 SPECIAL PURPOSE KITS	
					FIG. 405 ALTERNATOR,100 AMP KIT (NIEHOFF)	

DELETED

DELETED

Figure 406. Alternator, 100 AMP (PRESTOLITE).

(1) ITEM NO	(2) SMR CODE	(3) NSN	(4) CAGEC	(5) PART NUMBER	(6) DESCRIPTION AND USABLE ON CODES(UOC)	(7) QTY
					GROUP 3307 SPECIAL PURPOSE KITS	
					FIG. 406 ALTERNATOR,100 AMP KIT (PRESTOLITE)	

DELETED

DELETED

Figure 407. Alternator, 100 AMP (NIEHOFF).

(1) ITEM NO	(2) SMR CODE	(3) NSN	(4) CAGEC	(5) PART NUMBER	(6) DESCRIPTION AND USABLE ON CODES(UOC)	(7) QTY
					GROUP 3307 SPECIAL PURPOSE KITS	
					FIG. 407 ALTERNATOR,100 AMP (NIEHOFF)	

DELETED

DELETED

Figure 408. Alternator, 200 AMP Kit.

(1) ITEM NO	(2) SMR CODE	(3) NSN	(4) CAGEC	(5) PART NUMBER	(6) DESCRIPTION AND USABLE ON CODES(UOC)	(7) QTY
					GROUP 3307 SPECIAL PURPOSE KITS	
					FIG. 408 ALTERNATOR,200 AMP KIT	

DELETED

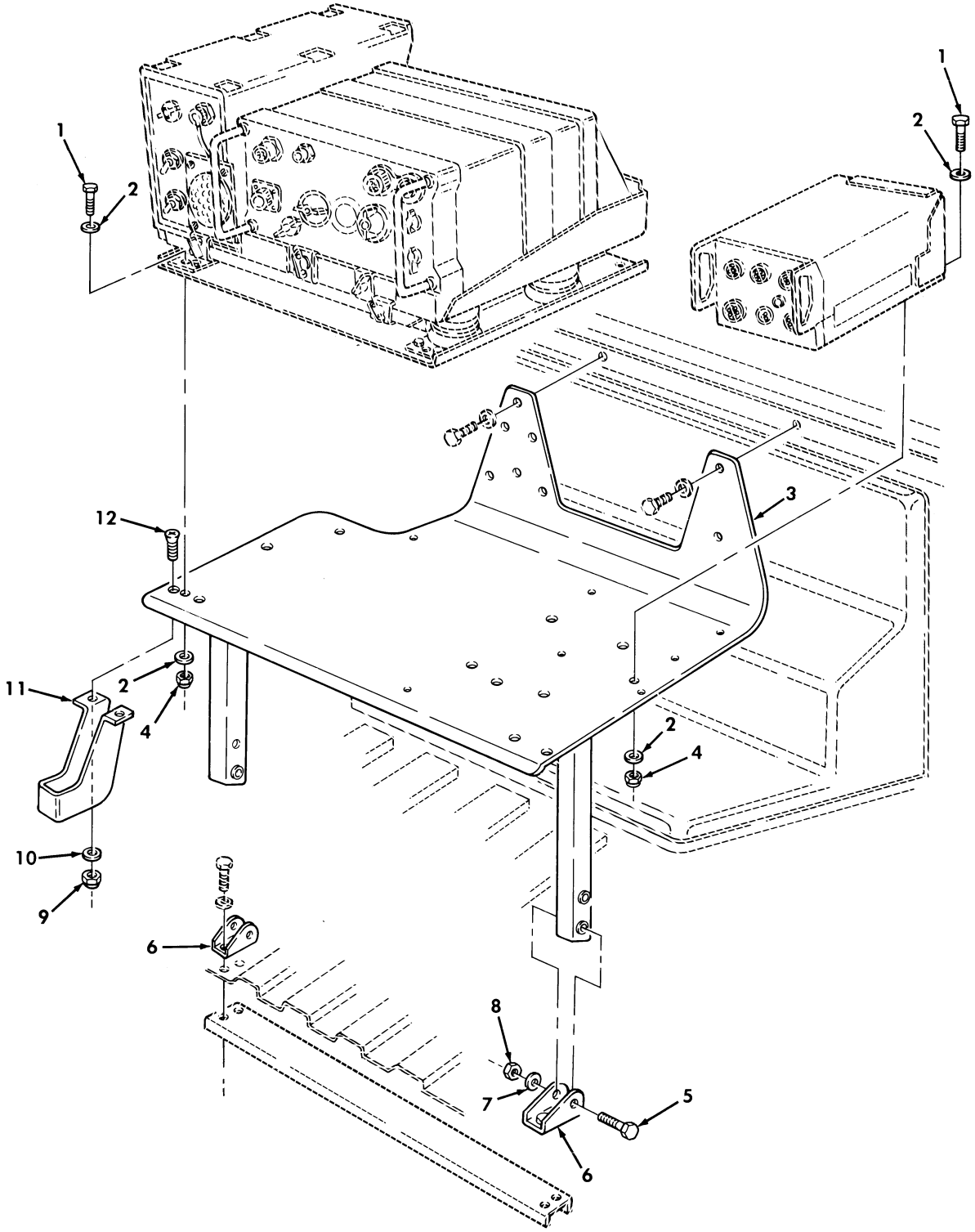

Figure 409. Communications Kit, Radio Rack Assembly, and Mounting Hardware, AN/GRC-160 and TSEC/KY-57.

(1) ITEM NO	(2) SMR CODE	(3) NSN	(4) CAGEC	(5) PART NUMBER	(6) DESCRIPTION AND USABLE ON CODES(UOC)	(7) QTY
					GROUP 3307 SPECIAL PURPOSE KITS	
					FIG. 409 COMMUNICATIONS KIT,RADIO RACK ASSEMBLY,AND MOUNTING HARDWARE, AN/GRC-160 AND TSEC/KY-57	
* 1	PAOZZ	5306002258499	96906	MS90725-34	BOLT,MACHINE 5/16-18 X 1.00,PART OF KIT P/N 5590244..... UOC:AVY,A13,A14,BVY,HVY,H13,H14	9
* 2	PAOZZ	5310011191024	24617	2436162	WASHER,FLAT 5/16 PART OF KIT P/N 5590244..... UOC:AVY,A13,A14,BVY,HVY,H13,H14	18
* 3	PFOZZ	5975011975505	19207	12340167	MOUNTING BASE,ELECT PART OF KIT P/N 5590244..... UOC:AVY,A13,A14,BVY,HVY,H13,H14	1
* 4	PAOZZ	5310008140673	96906	MS51943-33	NUT,SELF-LOCKING,HE 5/16-18 PART OF KIT P/N 5590244..... UOC:AVY,A13,A14,BVY,HVY,H13,H14	9
* 5	PAOZZ	5306010684592	96906	MS35764-1303	BOLT,SELF-LOCKING 3/8-16 X 2.25 PART OF KIT P/N 5590244..... UOC:AVY,A13,A14,BVY,HVY,H13,H14	2
* 6	PFOZZ	2590012028546	19207	12340134	BRACKET,VEHICULAR C PART OF KIT P/N 5590244..... UOC:AVY,A13,A14,HVY,H13,H14	2
* 6	PAOZZ	5340014120866	19207	12446766	BRACKET,DOUBLE ANGL..... UOC:BVY	2
* 7	PAOZZ	5310014124013	24617	2436163	WASHER,FLAT 3/8 PART OF KIT P/N 5590244..... UOC:AVY,A13,A14,BVY,HVY,H13,H14	2
* 8	PAOZZ	5310009359021	96906	MS51943-35	NUT,SELF-LOCKING,HE 3/8-16,PART OF KIT P/N 5590244..... UOC:AVY,A13,A14,BVY,HVY,H13,H14	2
* 9	PAOZZ	5310000614650	96906	MS51943-31	NUT,SELF-LOCKING,HE 1/4-20 PART OF KIT P/N 5590244..... UOC:AVY,A13,A14,BVY,HVY,H13,H14	2
* 10	PAOZZ	5310011023270	24617	2436161	WASHER,FLAT 1/4 PART OF KIT P/N 5590244..... UOC:AVY,A13,A14,BVY,HVY,H13,H14	2
* 11	PFOZZ	2540012028545	19207	12340131	BRACKET,HEAD PHONE PART OF KIT P/N 5590244..... UOC:AVY,A13,A14,BVY,HVY,H13,H14	1
* 12	PAOZZ	5305007195021	96906	MS51959-81	SCREW,MACHINE 1/4-20 X .75 PART OF KIT P/N 5590244..... UOC:AVY,A13,A14,BVY,HVY,H13,H14	2

END OF FIGURE

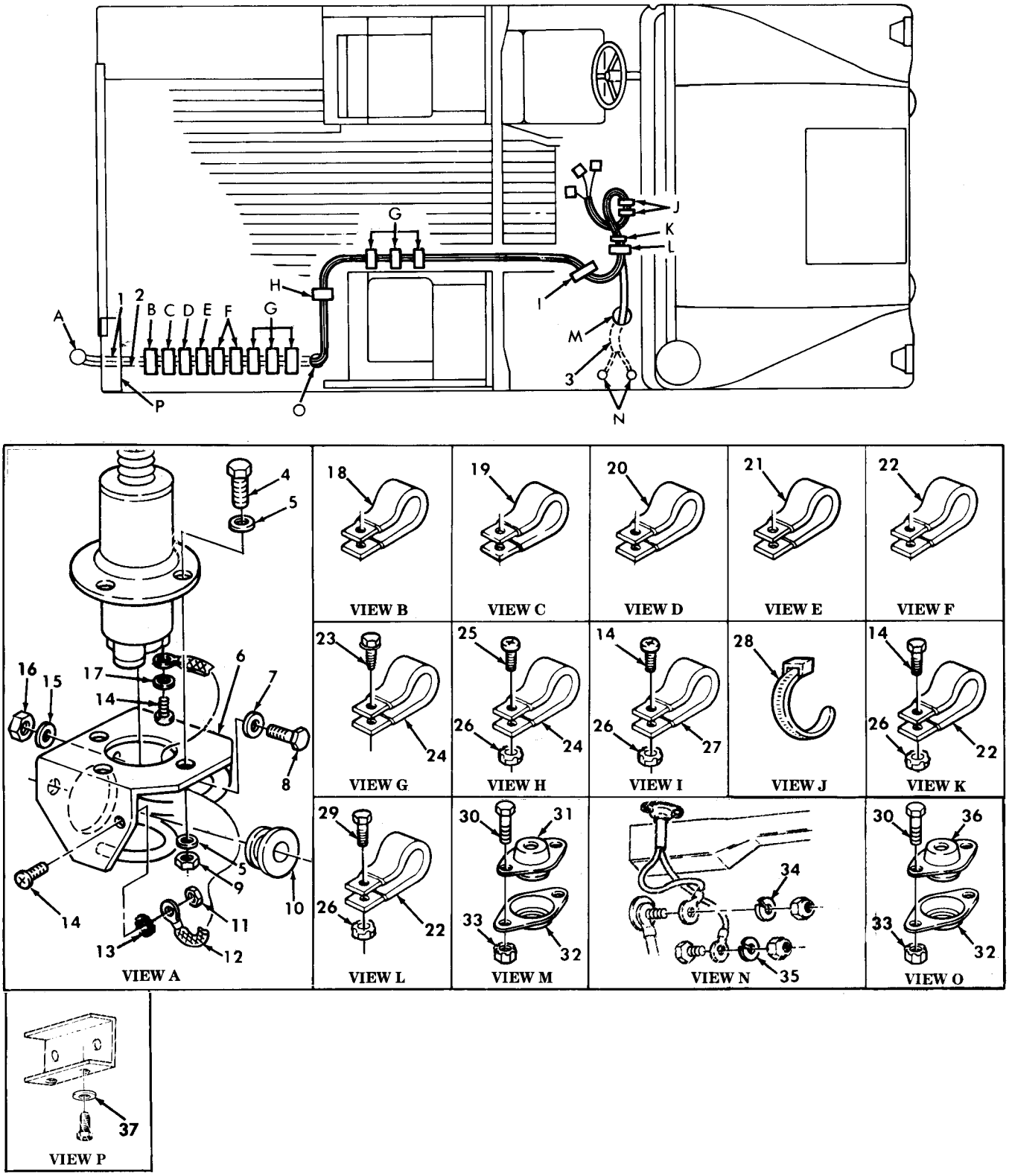

Figure 410. Communications Kit, Radio Cables, AN/GRC-160, AN/VRC-46, and TSEC/KY-57.

(1) ITEM NO	(2) SMR CODE	(3) NSN	(4) CAGEC	(5) PART NUMBER	(6) DESCRIPTION AND USABLE ON CODES(UOC)	(7) QTY
					GROUP 3307 SPECIAL PURPOSE KITS	
					FIG. 410 COMMUNICATIONS KIT,RADIO CABLES,AN/GRC-160,AN/VRC-46,AND TSEC/KY-57	
1	PAOZZ	5995012017495	19207	12338086-3	CABLE ASSEMBLY,RADI PART OF KIT P/N 5590244..... UOC:A13,A14,H13,H14	1
2	PAOZZ	5995012014129	19207	12338089-3	CABLE ASSEMBLY,SPEC PART OF KIT P/N 5590244..... UOC:A13,A14,H13,H14	1
* 3	PAOZZ	5995012014128	34623	5577765-B	CABLE ASSEMBLY,SPEC PART OF KIT P/N 5590244..... UOC:A13,A14,H13,H14	1
* 4	PAOZZ	5305002693216	80205	MS90725-66	SCREW,CAP,HEXAGON H 3/8-16 X 2.00, PART OF KIT P/N 5590244..... UOC:A13,A14,H13,H14	4
5	PAOZZ	5310014124013	24617	2436163	WASHER,FLAT 3/8,PART OF KIT P/N 5590244..... UOC:A13,A14,H13,H14	8
6	PFOZZ	5985012159404	80063	A3046166	SUPPORT,ANTENNA PART OF KIT P/N 5590244..... UOC:A13,A14,H13,H14	1
* 7	PAOZZ	5310011191024	24617	2436162	WASHER,FLAT 5/16,PART OF KIT P/N 5590244..... UOC:A13,A14,H13,H14	3
8	PAOZZ	5306002258499	96906	MS90725-34	BOLT,MACHINE 5/16-18 X 3/4,PART OF KIT P/N 5590244..... UOC:A13,A14,H13,H14	3
9	PAOZZ	5310009359021	96906	MS51943-35	NUT,SELF-LOCKING,HE 3/8-16,PART OF KIT P/N 5590244..... UOC:A13,A14,H13,H14	4
10	PAOZZ	5325012085424	19207	12338098	GROMMET,NONMETALLIC PART OF KIT P/N 5590244..... UOC:A13,A14,H13,H14	1
11	PAOZZ	5310012510726	34623	5593053	NUT,SELF-LOCKING,HE #10-32,PART OF KIT P/N 5590244..... UOC:A13,A14,H13,H14	1
12	PAOZZ	5999012720018	34623	5598121	STRIP,ELECTRICAL GR PART OF KIT P/N 5590244..... UOC:A13,A14,H13,H14	1
13	PAOZZ	5310000453296	96906	MS35338-43	WASHER,LOCK #10,PART OF KIT P/N 5590244..... UOC:A13,A14,H13,H14	1
* 14	PAOZZ	5305000593659	96906	MS51958-63	SCREW,MACHINE #10-32 X 1/2,PART OF KIT P/N 5590244..... UOC:A13,A14,H13,H14	4
15	PFOZZ	5310012087576	19207	12338095	WASHER,FLAT 11/32,PART OF KIT P/N 5590244..... UOC:A13,A14,H13,H14	3
16	PAOZZ	5310012531615	34623	5592958	NUT,SELF-LOCKING,HE 5/16-18,PART OF KIT P/N 5590244.....	3

(1) ITEM NO	(2) SMR CODE	(3) NSN	(4) CAGEC	(5) PART NUMBER	(6) DESCRIPTION AND USABLE ON CODES(UOC)	(7) QTY
					UOC:A13,A14,H13,H14	
17	PAOZZ	5310000453296	96906	MS35338-43	WASHER,LOCK #10,PART OF KIT P/N 5590244.....	1
					UOC:A13,A14,H13,H14	
18	PAOZZ	5340008338476	96906	MS21333-122	CLAMP,LOOP PART OF KIT P/N 5590244.	1
					UOC:A13,A14,H13,H14	
19	PAOZZ	5340000572906	96906	MS21333-73	CLAMP,LOOP PART OF KIT P/N 5590244.	1
					UOC:A13,A14,H13,H14	
20	PAOZZ	5340009226300	96906	MS21333-77	CLAMP,LOOP PART OF KIT P/N 5590244.	1
					UOC:A13,A14,H13,H14	
21	PAOZZ	5340007247038	96906	MS21333-76	CLAMP,LOOP PART OF KIT P/N 5590244.	1
					UOC:A13,A14,H13,H14	
22	PAOZZ	5340000502740	96906	MS21333-75	CLAMP,LOOP PART OF KIT P/N 5590244.	4
					UOC:A13,A14,H13,H14	
23	PAOZZ	5305012854234	24617	9414241	SCREW,MACHINE #10-32 X .75,PART OF KIT P/N 5590244.....	6
					UOC:A13,A14,H13,H14	
24	PAOZZ	5340000572904	96906	MS21333-71	CLAMP,LOOP PART OF KIT P/N 5590244.	7
					UOC:A13,A14,H13,H14	
25	PAOZZ	5305000593661	96906	MS51958-65	SCREW,MACHINE #10-32 X 3/4,PART OF KIT P/N 5590244.....	1
					UOC:A13,A14,H13,H14	
* 26	PAOZZ	5310001249265	72582	271169	NUT,PLAIN,ASSEMBLED #10-32,PART OF KIT P/N 5590244.....	4
					UOC:A13,A14,H13,H14	
27	PAOZZ	5340000886655	96906	MS21333-101	CLAMP,LOOP PART OF KIT P/N 5590244.	1
					UOC:A13,A14,H13,H14	
* 28	PAOZZ	5975010345871	96906	MS3367-7-0	STRAP,TIEDOWN,ELECT PART OF KIT P/N 5590244.....	2
					UOC:A13,A14,H13,H14	
29	PAOZZ	5305000711322	96906	MS51960-65	SCREW,MACHINE #10-32 X 1/2,PART OF KIT P/N 5590244.....	1
					UOC:A13,A14,H13,H14	
30	PAOZZ	5305000680502	96906	MS90725-6	SCREW,CAP,HEXAGON H 1/4-20 X 3/4, PART OF KIT P/N 5590244.....	4
					UOC:A13,A14,H13,H14	
31	PAOZZ	5325012055378	19207	12338084	GROMMET PART OF KIT P/N 5590244....	1
					UOC:A13,A14,H13,H14	
32	PAOZZ	2590004543620	34623	809223	RETAINER ASSEMBLY PART OF KIT P/N 5590244.....	2
					UOC:A13,A14,H13,H14	
33	PAOZZ	5310011520598	24617	271172	NUT,SELF-LOCKING 1/4-20,PART OF KIT P/N 5590244.....	4
					UOC:A13,A14,H13,H14	
34	PAOZZ	5310012538440	34623	5596566	WASHER,LOCK 1/2,PART OF KIT P/N 5590244.....	2
					UOC:A13,A14,H13,H14	
* 35	PAOZZ	5310005845272	96906	MS35338-48	WASHER,LOCK 1/2,PART OF KIT P/N 5590244.....	2
					UOC:A13,A14,H13,H14	
36	PAOZZ	5325012053203	19207	12338085	GROMMET PART OF KIT P/N 5590244....	1
					UOC:A13,A14,H13,H14	
37	PAOZZ	5310005825965	96906	MS35338-44	WASHER,LOCK 1/4,PART OF KIT P/N	1

(1) ITEM NO	(2) SMR CODE	(3) NSN	(4) CAGEC	(5) PART NUMBER	(6) DESCRIPTION AND USABLE ON CODES(UOC)	(7) QTY
					5590244.....	
KIT	PDOZZ	5999011975465	34623	5590244	PARTS KIT,ELECTRONI RAIDO,AN/GRC- 160,AN/VRC-46,AND TSEC KY-57,CARGO..	1
					UOC:A13,A14,H13,H14	
					BOLT,MACHINE (9) 409-1	
					BOLT,MACHINE (3) 410-8	
					BOLT,SELF-LOCKING (2) 409-5	
					BRACKET,HEAD PHONE (1) 409-11	
					BRACKET,RADIO (2) 409-6	
					CABLE ASSEMBLY,RADI(1) 410-1	
					CABLE ASSEMBLY,SPEC(1) 410-2	
					CABLE ASSEMBLY,SPEC(1) 410-3	
					CLAMP,LOOP (7) 410-24	
					CLAMP,LOOP (1) 410-20	
					CLAMP,LOOP (1) 410-19	
					CLAMP,LOOP (1) 410-27	
					CLAMP,LOOP (1) 410-21	
					CLAMP,LOOP (4) 410-22	
					CLAMP,LOOP (1) 410-18	
					GROMMET (1) 410-36	
					GROMMET (1) 410-31	
					GROMMET,NONMETALLIC(1) 410-10	
					MOUNTING BASE,ELECT(1) 409-3	
					NUT,PLAIN,ASSEMBLED(4) 410-26	
					NUT,SELF-LOCKING (2) 409-9	
					NUT,SELF-LOCKING (4) 410-33	
					NUT,SELF-LOCKING (9) 409-4	
					NUT,SELF-LOCKING (2) 409-8	
					NUT,SELF-LOCKING (3) 410-16	
					NUT,SELF-LOCKING (4) 410-9	
					NUT,SELF-LOCKING (1) 410-11	
					RETAINER ASSEMBLY (2) 410-32	
					SCREW,CAP,HEXAGON H(4) 410-30	
					SCREW,CAP,HEXAGON H(4) 410-4	
					SCREW,MACHINE (4) 410-14	
					SCREW,MACHINE (2) 409-12	
					SCREW,MACHINE (6) 410-23	
					SCREW,MACHINE (1) 410-25	
					SCREW,MACHINE (1) 410-29	
					STRAP (2) 410-28	
					STRIP,ELECTRIC,GR (1) 410-12	
					SUPPORT,ANTENNA (1) 410-6	
					WASHER,FLAT (3) 410-15	
					WASHER,FLAT (3) 410-7	
					WASHER,FLAT (18) 409-2	
					WASHER,FLAT (2) 409-7	
					WASHER,FLAT (2) 409-10	
					WASHER,FLAT (8) 410-5	
					WASHER,LOCK (1) 410-17	
					WASHER,LOCK (2) 410-34	
					WASHER,LOCK (1) 410-13	
					WASHER,LOCK (2) 410-35	

(1) ITEM NO	(2) SMR CODE	(3) NSN	(4) CAGEC	(5) PART NUMBER	(6) DESCRIPTION AND USABLE ON CODES(UOC)	(7) QTY
					WASHER,LOCK (1) 410-37	

END OF FIGURE

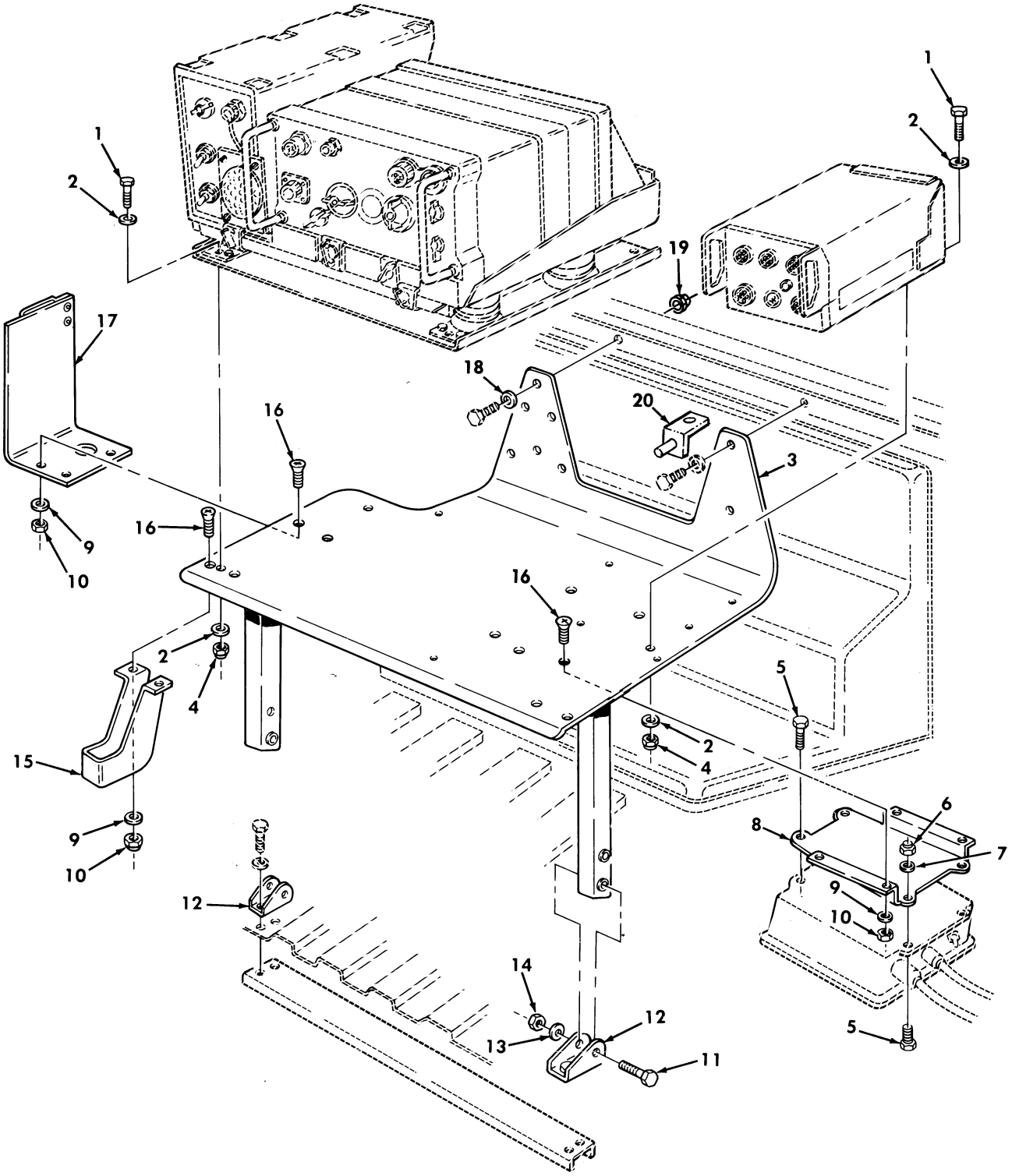

Figure 411. Communications Kit, Radio Rack Assembly, and Mounting Hardware, AN/GRC-160 and TSEC/KY-57, TOW Carrier.

(1) ITEM NO	(2) SMR CODE	(3) NSN	(4) CAGEC	(5) PART NUMBER	(6) DESCRIPTION AND USABLE ON CODES(UOC)	(7) QTY
					GROUP 3307 SPECIAL PURPOSE KITS	
					FIG. 411 COMMUNICATIONS KIT,RADIO RACK ASSEMBLY,AND MOUNTING HARDWARE, AN/GRC-160 AND TSEC/KY-57,TOW CARRIER	
1	PAOZZ	5306002258499	96906	MS90725-34	BOLT,MACHINE 5/16-18 X 1.00..... UOC:A11,A24,A27,B24,H11,H24,H27,MMM	8
2	PAOZZ	5310011023270	24617	2436161	WASHER,FLAT 1/4..... UOC:A11,A24,A27,B24,H11,H24,H27,MMM	16
3	PFOZZ	5975011975505	19207	12340167	MOUNTING BASE,ELECT PART OF KIT P/N 5705689..... UOC:A11,A24,A27,B24,H11,H24,H27,MMM	1
4	PAOZZ	5310008140673	96906	MS51943-33	NUT,SELF-LOCKING,HE 5/16-18..... UOC:A11,A24,A27,B24,H11,H24,H27,MMM	8
5	PAOZZ	5305002400194	96906	MS51849-76	SCREW,MACHINE #10-24 X 3/4..... UOC:A11,A24,A27,B24,H11,H24,H27,MMM	4
6	PAOZZ	5310012699245	24617	190254	NUT,SELF-LOCKING,HE #10-24..... UOC:A11,A24,A27,B24,H11,H24,H27,MMM	4
7	PAOZZ	5310000145850	96906	MS27183-42	WASHER,FLAT #10..... UOC:A11,A24,A27,B24,H11,H24,H27,MMM	4
8	PAOZZ	2540012028548	19207	12340153	BRACE,RADIO MOUNTIN PART OF KIT P/N 5705689..... UOC:A11,A24,A27,B24,H11,H24,H27,MMM	1
9	PAOZZ	5310011023270	24617	2436161	WASHER,FLAT 1/4..... UOC:A11,A24,A27,B24,H11,H24,H27,MMM	9
10	PAOZZ	5310000131245	21450	131245	NUT,SELF-LOCKING,HE 1/4-20..... UOC:A11,A24,A27,B24,H11,H24,H27,MMM	9
11	PAOZZ	5306010684592	96906	MS35764-1303	BOLT,SELF-LOCKING 3/8-16 X 2.25, PART OF KIT P/N 5705689..... UOC:A11,A24,A27,B24,H11,H24,H27,MMM	2
* 12	PFOZZ	2590012028546	19207	12340134	BRACKET,RADIO PART OF KIT P/N 5705689..... UOC:A11,A24,A27,H11,H24,H27,MMM	2
* 12	PAOZZ	5340014120866	19207	12446766	BRACKET,DOUBLE ANGL..... UOC:B24	2
13	PAOZZ	5310014124013	24617	2436163	WASHER,FLAT 3/8..... UOC:A11,A24,A27,B24,H11,H24,H27,MMM	2
14	PAOZZ	5310009359021	96906	MS51943-35	NUT,SELF-LOCKING,HE 3/8-16..... UOC:A11,A24,A27,B24,H11,H24,H27,MMM	2
15	PFOZZ	2540012028545	19207	12340131	BRACKET,HEAD PHONE PART OF KIT P/N 5705689..... UOC:A11,A24,A27,B24,H11,H24,H27,MMM	1
16	PAOZZ	5305007195021	96906	MS51959-81	SCREW,MACHINE 1/4-20 X .75..... UOC:A11,A24,A27,B24,H11,H24,H27,MMM	9
17	PFOZZ	5340012097386	19207	12340151	BRACKET,ANGLE PART OF KIT P/N 5705689..... UOC:A11,A24,A27,B24,H11,H24,H27,MMM	1
18	PAOZZ	5310011708705	24617	9419265	WASHER,FLAT..... UOC:B24	2
* 19	PAOZZ	5310009359022	81349	M45913/3-4FG8C	NUT,SELF-LOCKING,HE..... UOC:B24	2

(1) ITEM NO	(2) SMR CODE	(3) NSN	(4) CAGEC	(5) PART NUMBER	(6) DESCRIPTION AND USABLE ON CODES(UOC)	(7) QTY
20	PFOZZ	2590014398268	19207	12446763	BRACKET,ANGLE..... UOC:B24	1

END OF FIGURE

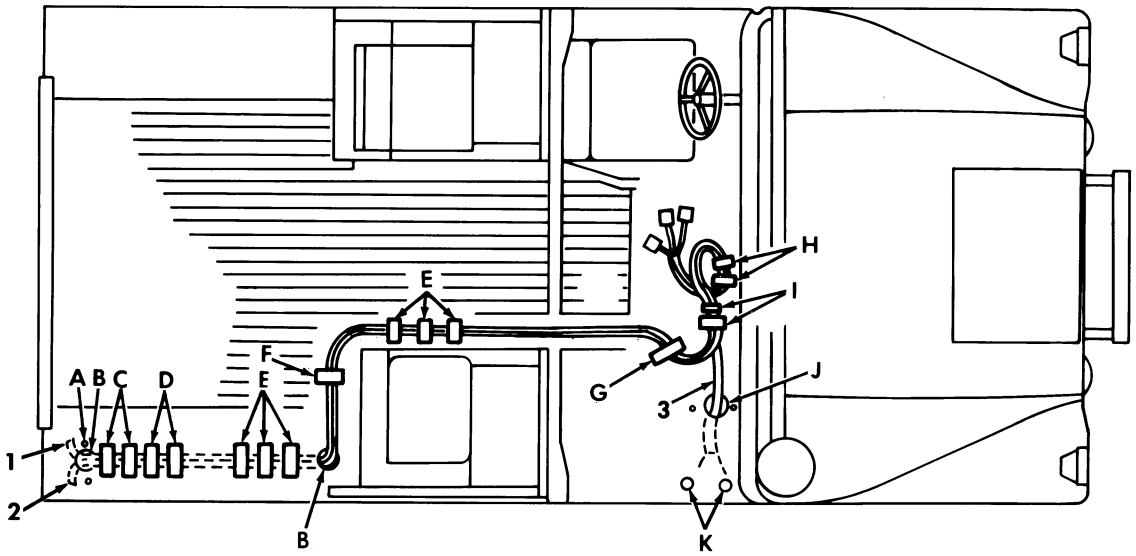

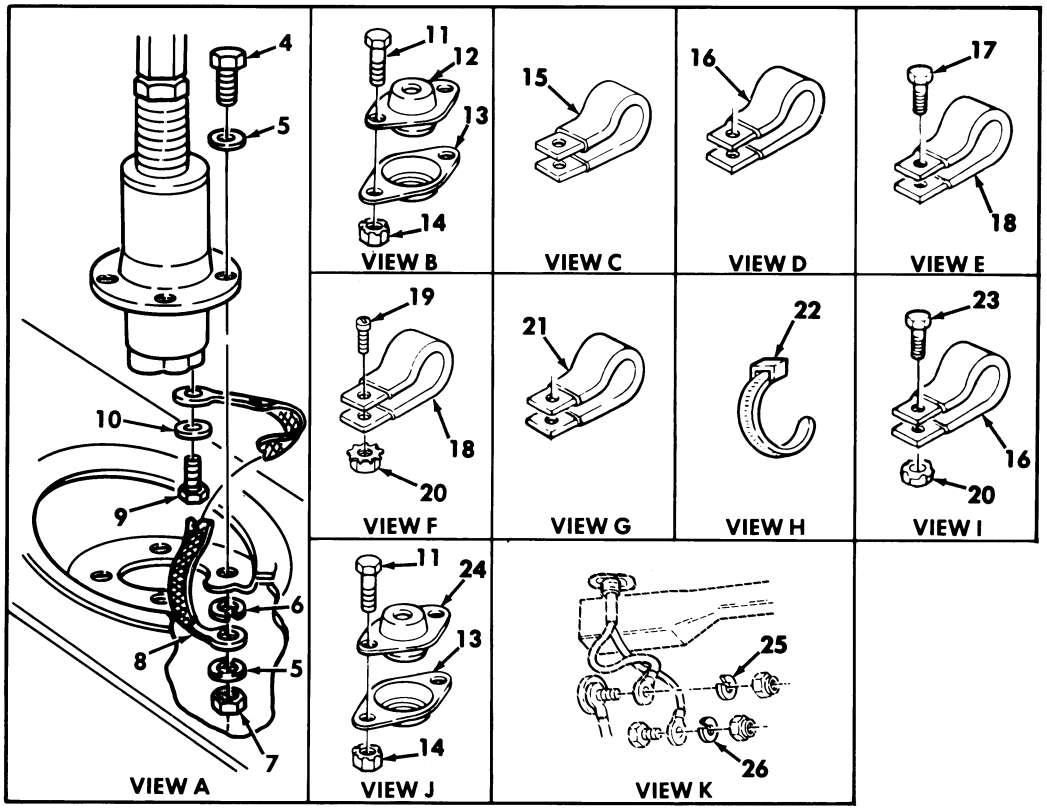

Figure 412. Communications Kit, Radio Cables, AN/GRC-160, AN/VRC-46, and TSEC/KY-57, TOW Carrier.

(1) ITEM NO	(2) SMR CODE	(3) NSN	(4) CAGEC	(5) PART NUMBER	(6) DESCRIPTION AND USABLE ON CODES(UOC)	(7) QTY
					GROUP 3307 SPECIAL PURPOSE KITS	
					FIG. 412 COMMUNICATIONS KIT,RADIO CABLES,AN/GRC-160,AN/VRC-46,AND TSEC/KY-57,TOW CARRIER	
1	PAOZZ	5995012017495	34623	5589167	CABLE ASSEMBLY,RADI PART OF KIT P/N 5705689..... UOC:A11,A24,A27,B24,H11,H24,H27,MMM	1
2	PAOZZ	5995012014129	19207	12338089-3	CABLE ASSEMBLY,SPEC PART OF KIT P/N 5705689..... UOC:A11,A24,A27,B24,H11,H24,H27,MMM	1
3	PAOZZ	5995012014128	19207	12338088	CABLE ASSEMBLY,SPEC PART OF KIT P/N 5705689..... UOC:A11,A24,A27,B24,H11,H24,H27,MMM	1
4	PAOZZ	5305007829489	80204	B1821BH038C200N	SCREW,CAP,HEXAGON H 3/8-16 X 2.00, PART OF KIT P/N 5705689..... UOC:A11,A24,A27,B24,H11,H24,H27,MMM	4
5	PAOZZ	5310014124013	24617	2436163	WASHER,FLAT 3/8..... UOC:A11,A24,A27,B24,H11,H24,H27,MMM	8
6	PAOZZ	5310000453299	96906	MS35333-42	WASHER,LOCK 3/8..... UOC:A11,A24,A27,B24,H11,H24,H27,MMM	1
7	PAOZZ	5310009359021	96906	MS51943-35	NUT,SELF-LOCKING,HE 3/8-16..... UOC:A11,A24,A27,B24,H11,H24,H27,MMM	4
8	PAOZZ	5940012048830	34623	5591200	TERMINAL STRIP,GROU PART OF KIT P/N 5705689..... UOC:A11,A24,A27,B24,H11,H24,H27,MMM	1
9	PAOZZ	5305000593659	96906	MS51958-63	SCREW,MACHINE #10-32 X 1/2,PART OF KIT P/N 5705689..... UOC:A11,A24,A27,B24,H11,H24,H27,MMM	2
10	PAOZZ	5310000453296	96906	MS35338-43	WASHER,LOCK 3/8,PART OF KIT P/N 5705689..... UOC:A11,A24,A27,B24,H11,H24,H27,MMM	1
11	PAOZZ	5305000680502	96906	MS90725-6	SCREW,CAP,HEXAGON H 1/4-20 X 3/4, PART OF KIT P/N 5705689..... UOC:A11,A24,A27,B24,H11,H24,H27,MMM	6
12	PAOZZ	5325012053203	19207	12338085	GROMMET PART OF KIT P/N 5705689.... UOC:A11,A24,A27,B24,H11,H24,H27,MMM	2
13	PAOZZ	2590004543620	19207	809223	RETAINER ASSEMBLY PART OF KIT P/N 5705689..... UOC:A11,A24,A27,B24,H11,H24,H27,MMM	3
14	PAOZZ	5310011520598	24617	271172	NUT,SELF-LOCKING,HE 1/4-20,PART OF KIT P/N 5705689..... UOC:A11,A24,A27,B24,H11,H24,H27,MMM	6
15	PAOZZ	5340008338476	96906	MS21333-122	CLAMP,LOOP PART OF KIT P/N 5705689. UOC:A11,A24,A27,B24,H11,H24,H27,MMM	2
16	PAOZZ	5340000502740	96906	MS21333-75	CLAMP,LOOP PART OF KIT P/N 5705689. UOC:A11,A24,A27,B24,H11,H24,H27,MMM	4
17	PAOZZ	5305012596322	34623	5593913	SCREW,MACHINE #10-32 X 3/4,PART OF KIT P/N 5705689..... UOC:A11,A24,A27,B24,H11,H24,H27,MMM	6
18	PAOZZ	5340000572904	96906	MS21333-71	CLAMP,LOOP PART OF KIT P/N 5705689. UOC:A11,A24,A27,B24,H11,H24,H27,MMM	7

(1) ITEM NO	(2) SMR CODE	(3) NSN	(4) CAGEC	(5) PART NUMBER	(6) DESCRIPTION AND USABLE ON CODES(UOC)	(7) QTY
19	PAOZZ	5305000593661	96906	MS51958-65	SCREW,MACHINE #10-32 X 3/4,PART OF KIT P/N 5705689..... UOC:A11,A24,A27,B24,H11,H24,H27,MMM	1
20	PAOZZ	5310012510726	34623	5593053	NUT,SELF-LOCKING,HE #10-32..... UOC:A11,A24,A27,B24,H11,H24,H27,MMM	3
21	PAOZZ	5340008546729	96906	MS21333-103	CLAMP,LOOP..... UOC:A11,A24,A27,B24,H11,H24,H27,MMM	1
* 22	PAOZZ	5975010345871	96906	MS3367-7-0	STRAP PART OF KIT P/N 5705689..... UOC:A11,A24,A27,B24,H11,H24,H27,MMM	2
23	PAOZZ	5305009847363	96906	MS35191-272	SCREW,MACHINE #10-32 X 1/2,PART OF KIT P/N 5705689..... UOC:A11,A24,A27,B24,H11,H24,H27,MMM	2
24	PAOZZ	5325012055378	19207	12338084	GROMMET PART OF KIT P/N 5705689.... UOC:A11,A24,A27,B24,H11,H24,H27,MMM	1
25	PFOZZ	5310012538440	34623	5596566	WASHER,LOCK 1/2..... UOC:A11,A24,A27,B24,H11,H24,H27,MMM	1
26	PAOZZ	5310000034094	96906	MS35338-48	WASHER,LOCK 1/2..... UOC:A11,A24,A27,B24,H11,H24,H27,MMM	1
*KIT	PDOZZ	5895011975467	34623	05705689	PARTS KIT,ELECTRONI RADIO,AN/GRC-160,AN/VRC-46,AND TSEC/KY-57,TOW CARRIER..... UOC:A11,A24,A27,B24,H11,H24,H27,MMM	1

BOLT,SELF-LOCKING (2) 411-11
BRACE,RADIO MOUNTIN(1) 411-8
BRACKET,HEAD PHONE (1) 411-15
BRACKET,ANGLE (1) 411-17
BRACKET,RADIO (2) 411-12
CABLE ASSEMBLY,RADI(1) 412-1
CABLE ASSEMBLY,SPEC(1) 412-3
CABLE ASSEMBLY,SPEC(1) 412-2
CLAMP,LOOP (2) 412-15
CLAMP,LOOP (4) 412-16
CLAMP,LOOP (7) 412-18
GROMMET (1) 412-24
GROMMET (2) 412-12
MOUNTING BASE,ELECT(1) 411-3
RETAINER ASSEMBLY (3) 411-13
NUT,SELF-LOCKING (6) 412-14
SCREW,CAP,HEXAGON H(6) 412-11
SCREW,CAP,HEXAGON H(4) 412-4
SCREW,MACHINE (2) 412-23
SCREW,MACHINE (2) 412-9
SCREW,MACHINE (6) 412-17
SCREW,MACHINE (1) 412-19
STRAP (2) 412-22
TERMINAL STRIP (1) 412-8
WASHER,LOCK (1) 412-10

END OF FIGURE

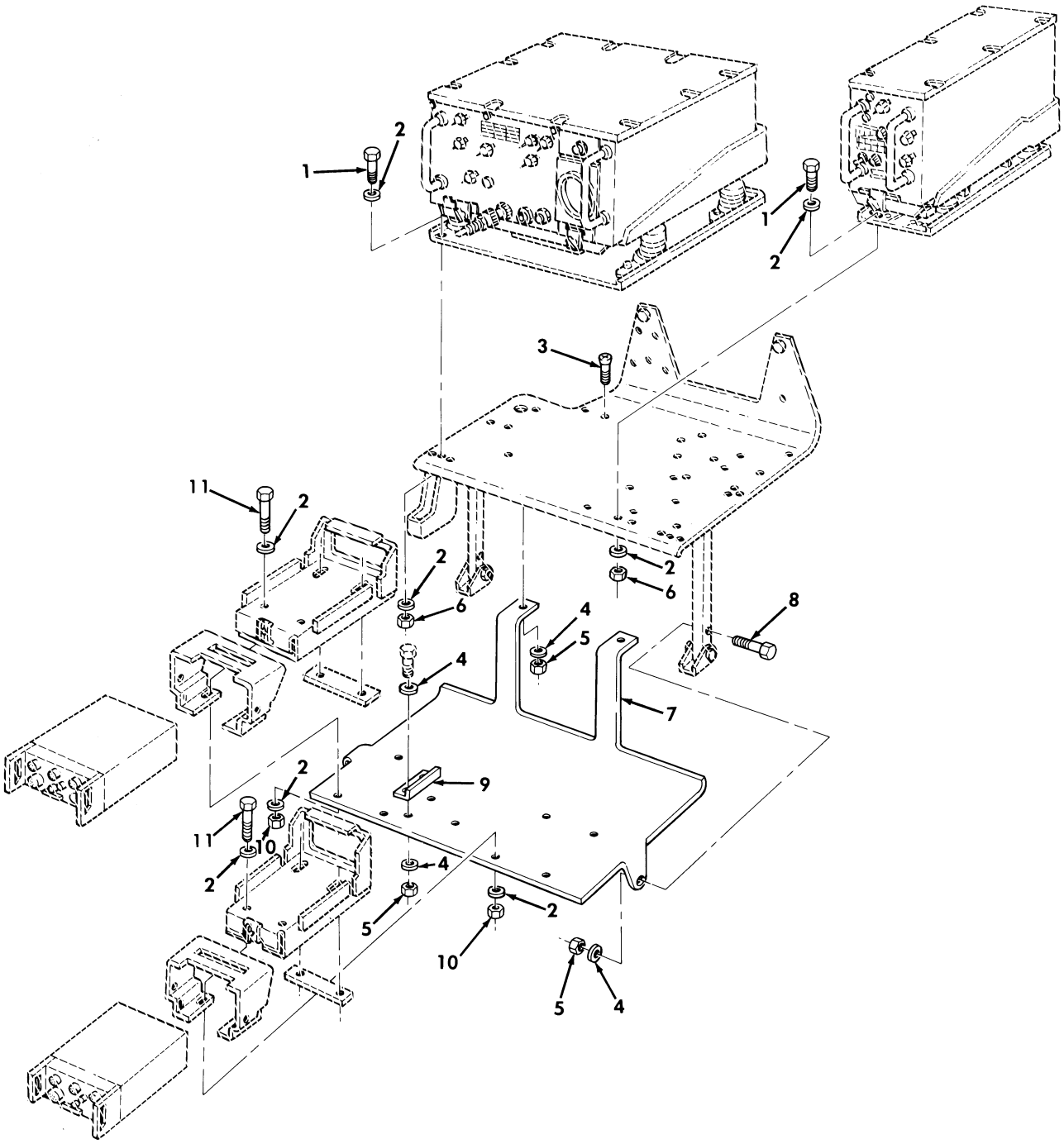

Figure 413. Communications Kit, Radio Rack Assembly, AN/VRC-47 and (2) TSEC/KY-57 Assemblies.

(1) ITEM NO	(2) SMR CODE	(3) NSN	(4) CAGEC	(5) PART NUMBER	(6) DESCRIPTION AND USABLE ON CODES(UOC)	(7) QTY
					GROUP 3307 SPECIAL PURPOSE KITS	
					FIG. 413 COMMUNICATIONS KIT,RADIO RACK ASSEMBLY,AN/VRC-47 AND (2) TSEC/KY-57 ASSEMBLIES	
1	PAOZZ	5306002258499	96906	MS90725-34	BOLT,MACHINE 5/16-18 X 1.00,PART OF KIT P/N PPL-10323..... UOC:AVY,A13,A14,BVY,B17,B18,C17,HVY, H13,H14,H17,H18,NNN	8
* 2	PAOZZ	5310011191024	24617	2436162	WASHER,FLAT 5/16,PART OF IT P/N PPL-10323..... UOC:AVY,A13,A14,BVY,B17,B18,C17,HVY, H13,H14,H17,H18,NNN	32
3	PAOZZ	5305007195021	96906	MS51959-81	SCREW,MACHINE 1/4-20 X .75,PART OF KIT P/N PPL-10323..... UOC:AVY,A13,A14,BVY,B17,B18,C17,HVY, H13,H14,H17,H18,NNN	2
4	PAOZZ	5310011023270	24617	2436161	WASHER,FLAT 1/4,PART OF KIT P/N PPL-10323..... UOC:AVY,A13,A14,BVY,B17,B18,C17,HVY, H13,H14,H17,H18,NNN	8
5	PAOZZ	5310000614650	96906	MS51943-31	NUT,SELF-LOCKING,HE 1/4-20,PART OF KIT P/N PPL-10323..... UOC:AVY,A13,A14,BVY,B17,B18,C17,HVY, H13,H14,H17,H18,NNN	6
6	PAOZZ	5310008140673	96906	MS51943-33	NUT,SELF-LOCKING,HE 5/16-18,PART OF KIT P/N PPL-10323..... UOC:AVY,A13,A14,BVY,B17,B18,C17,HVY, H13,H14,H17,H18,NNN	8
7	PAOZZ	2540012491589	19207	12340641	SHELF,AUXILIARY PART OF KIT P/N PPL-10323..... UOC:AVY,A13,A14,BVY,B17,B18,C17,HVY, H13,H14,H17,H18,NNN	1
8	PAOZZ	5305000712237	96906	MS90725-14	SCREW,CAP,HEXAGON H 1/4-20 X 2.00, PART OF KIT P/N PPL-10323..... UOC:AVY,A13,A14,BVY,B17,B18,C17,HVY, H13,H14,H17,H18,NNN	2
9	PAOZZ	5340012551109	19207	12340635	BRACKET,ANGLE PART OF KIT P/N PPL-10323..... UOC:AVY,A13,A14,BVY,B17,B18,C17,HVY, H13,H14,H17,H18,NNN	1
10	PAOZZ	5310012559452	34623	5593027	NUT,PLAIN,HEXAGON 5/16-24,PART OF KIT P/N PPL-10323..... UOC:AVY,A13,A14,BVY,B17,B18,C17,HVY, H13,H14,H17,H18,NNN	8
11	PAOZZ	5306000514077	80204	B1821BH031F113N	BOLT,MACHINE 5/16-24 X 1.125,PART OF KIT P/N 5705689..... UOC:AVY,A13,A14,BVY,B17,B18,C17,HVY, H13,H14,H17,H18,NNN	8

END OF FIGURE

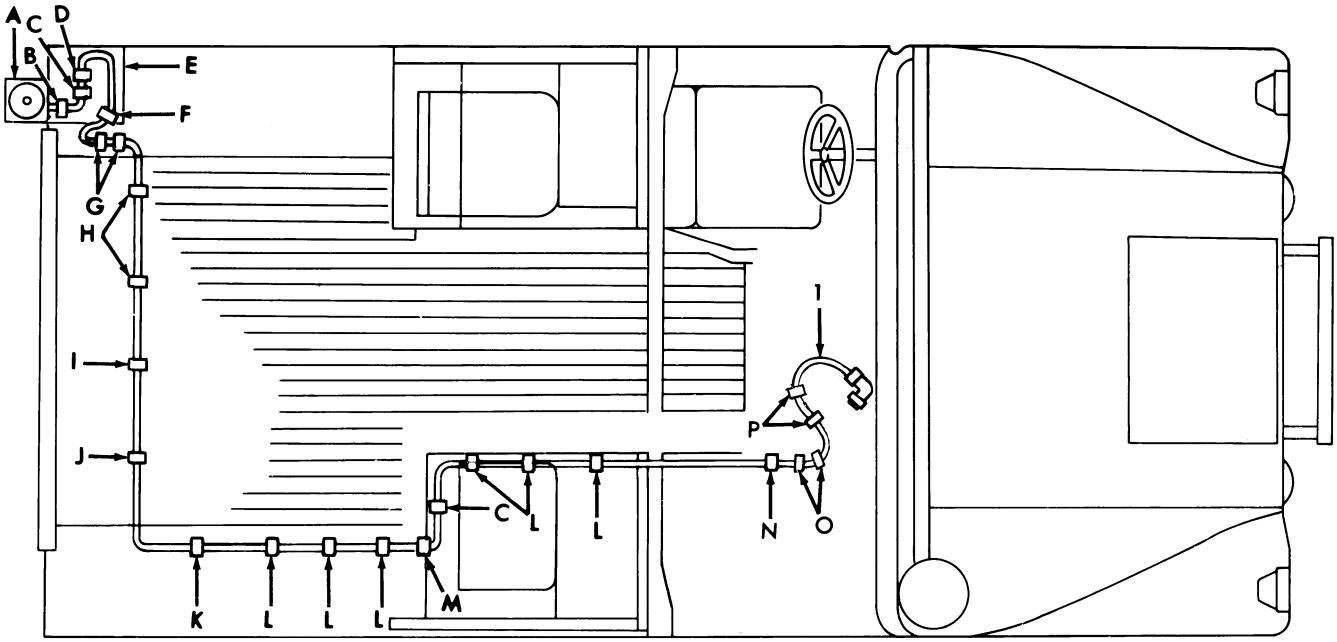

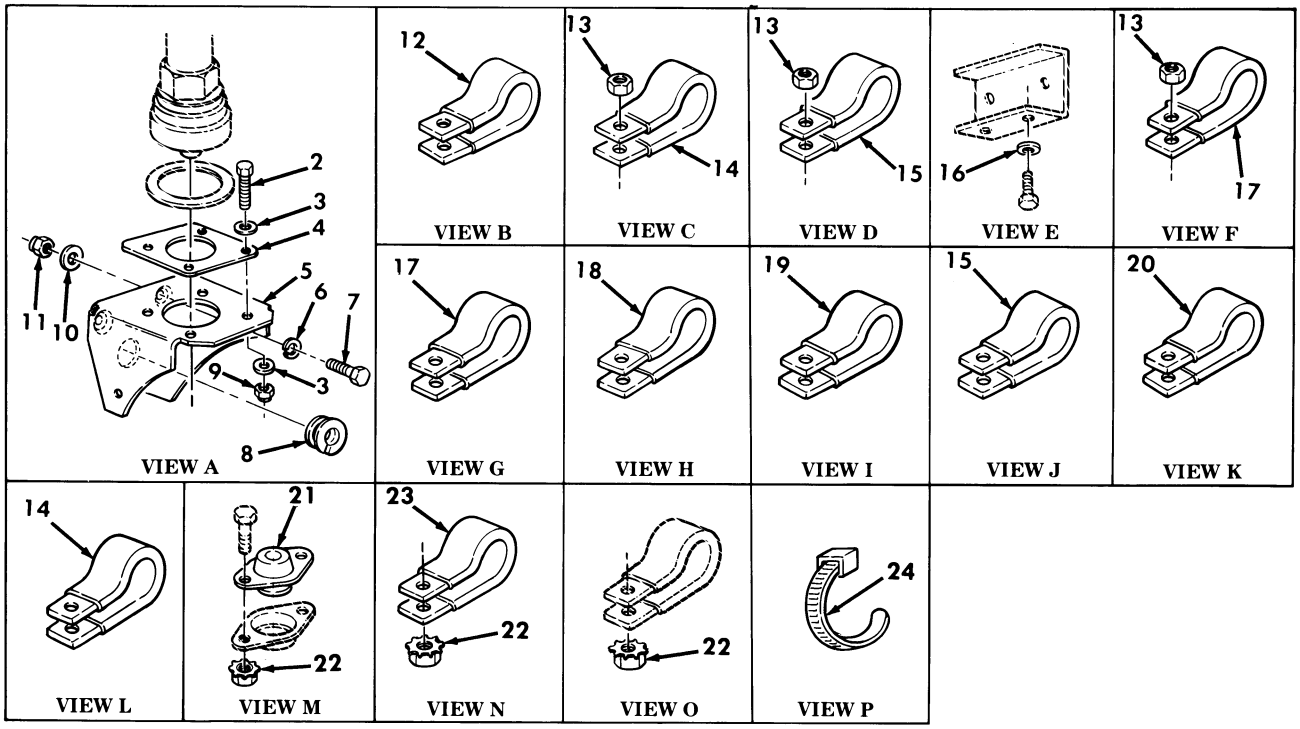

Figure 414. Communications Kit, Radio Cables, AN/VRC-47, and (2) TSEC/KY-57 Assemblies.

(1) ITEM NO	(2) SMR CODE	(3) NSN	(4) CAGEC	(5) PART NUMBER	(6) DESCRIPTION AND USABLE ON CODES(UOC)	(7) QTY
					GROUP 3307 SPECIAL PURPOSE KITS	
					FIG. 414 COMMUNICATIONS KIT,RADIO CABLES,AN/VRC-47 AND (2) TSEC/KY-57 ASSEMBLIES	
1	PAOZZ	5995012519316	19207	12338086-4	CABLE ASSEMBLY,RADI PART OF KIT P/N PPL-10323..... UOC:AVY,A13,A14,BVY,B17,B18,C17,HVY, H13,H14,H17,H18,NNN	1
2	PAOZZ	5305008213869	80204	B1821BH038C175N	SCREW,CAP,HEXAGON H 3/8-16 X 1.75 PART OF KIT P/N PPL-10323..... UOC:AVY,A13,A14,BVY,B17,B18,C17,HVY, H13,H14,H17,H18,NNN	4
3	PAOZZ	5310014124013	24617	2436163	WASHER,FLAT 3/8 PART OF KIT P/N PPL-10323..... UOC:AVY,A13,A14,BVY,B17,B18,C17,HVY, H13,H14,H17,H18,NNN	8
4	PAOZZ	5985012533514	19207	12340637	ADAPTER,ANTENNA TO PART OF KIT P/N PPL-10323..... UOC:AVY,A13,A14,BVY,B17,B18,C17,HVY, H13,H14,H17,H18,NNN	1
5	PAOZZ	5985012159404	80063	A3046166	SUPPORT,ANTENNA PART OF KIT P/N PPL-10323..... UOC:AVY,A13,A14,BVY,B17,B18,C17,HVY, H13,H14,H17,H18,NNN	1
* 6	PAOZZ	5310011191024	24617	2436162	WASHER,FLAT 5/16 PART OF KIT P/N PPL-10323..... UOC:AVY,A13,A14,BVY,B17,B18,C17,HVY, H13,H14,H17,H18,NNN	3
7	PAOZZ	5306002258499	96906	MS90725-34	BOLT,MACHINE 5/16-18 X 1.00 PART OF KIT P/N PPL-10323..... UOC:AVY,A13,A14,BVY,B17,B18,C17,HVY, H13,H14,H17,H18,NNN	3
8	PAOZZ	5325012085424	19207	12338098	GROMMET,NONMETALLIC PART OF KIT P/N PPL-10323..... UOC:AVY,A13,A14,BVY,B17,B18,C17,HVY, H13,H14,H17,H18,NNN	1
9	PAOZZ	5310009359021	96906	MS51943-35	NUT,SELF-LOCKING,HE 3/8-16 PART OF KIT P/N PPL-10323..... UOC:AVY,A13,A14,BVY,B17,B18,C17,HVY, H13,H14,H17,H18,NNN	4
10	PAOZZ	5310012087576	19207	12338095	WASHER,FLAT 5/16 PART OF KIT P/N PPL-10323..... UOC:AVY,A13,A14,BVY,B17,B18,C17,HVY, H13,H14,H17,H18,NNN	3
11	PAOZZ	5310008140673	96906	MS51943-33	NUT,SELF-LOCKING,HE 5/16-18 PART OF KIT P/N PPL-10323..... UOC:AVY,A13,A14,BVY,B17,B18,C17,HVY, H13,H14,H17,H18,NNN	3
12	PAOZZ	5340000509077	96906	MS21333-119	CLAMP,LOOP PART OF KIT P/N PPL-10323 UOC:AVY,A13,A14,BVY,B17,B18,C17,HVY, H13,H14,H17,H18,NNN	1

(1) ITEM NO	(2) SMR CODE	(3) NSN	(4) CAGEC	(5) PART NUMBER	(6) DESCRIPTION AND USABLE ON CODES(UOC)	(7) QTY
13	PAOZZ	5310001249265	72582	271169	NUT,PLAIN,ASSEMBLED #10-32 PART OF KIT P/N PPL-10323..... UOC:AVY,A13,A14,BVY,B17,B18,C17,HVY, H13,H14,H17,H18,NNN	6
14	PAOZZ	5340000572904	96906	MS21333-71	CLAMP,LOOP PART OF KIT P/N PPL-10323 UOC:AVY,A13,A14,BVY,B17,B18,C17,HVY, H13,H14,H17,H18,NNN	8
15	PAOZZ	5340009899222	96906	MS21333-74	CLAMP,LOOP PART OF KIT P/N PPL-10323 UOC:AVY,A13,A14,BVY,B17,B18,C17,HVY, H13,H14,H17,H18,NNN	2
16	PAOZZ	5310005825965	96906	MS35338-44	WASHER,LOCK 1/4 PART OF KIT P/N PPL -10323..... UOC:AVY,A13,A14,BVY,B17,B18,C17,HVY, H13,H14,H17,H18,NNN	2
17	PAOZZ	5340000572906	96906	MS21333-73	CLAMP,LOOP PART OF KIT P/N PPL-10323 UOC:AVY,A13,A14,BVY,B17,B18,C17,HVY, H13,H14,H17,H18,NNN	2
18	PAOZZ	5340007247038	96906	MS21333-76	CLAMP,LOOP PART OF KIT P/N PPL-10323 UOC:AVY,A13,A14,BVY,B17,B18,C17,HVY, H13,H14,H17,H18,NNN	2
19	PAOZZ	5340009226300	96906	MS21333-77	CLAMP,LOOP PART OF KIT P/N PPL-10323 UOC:AVY,A13,A14,BVY,B17,B18,C17,HVY, H13,H14,H17,H18,NNN	1
20	PAOZZ	5340000502740	96906	MS21333-75	CLAMP,LOOP PART OF KIT P/N PPL-10323 UOC:AVY,A13,A14,BVY,B17,B18,C17,HVY, H13,H14,H17,H18,NNN	1
21	PAOZZ	5325012555062	34623	5590029	GROMMET,NONMETALLIC PART OF KIT P/N PPL-10323..... UOC:AVY,A13,A14,BVY,B17,B18,C17,HVY, H13,H14,H17,H18,NNN	1
* 22	PAOZZ	5310011520598	24617	271172	NUT,SELF-LOCKING,AS 1/4-20 PART OF KIT P/N PPL-10323..... UOC:AVY,A13,A14,BVY,B17,B18,C17,HVY, H13,H14,H17,H18,NNN	4
23	PAOZZ	5340009848540	96906	MS21333-102	CLAMP,LOOP PART OF KIT P/N PPL-10323 UOC:AVY,A13,A14,BVY,B17,B18,C17,HVY, H13,H14,H17,H18,NNN	1
* 24	PAOZZ	5975010345871	96906	MS3367-7-0	STRAP,TIEDOWN,ELECT PART OF KIT P/N PPL-10323..... UOC:AVY,A13,A14,BVY,B17,B18,C17,HVY, H13,H14,H17,H18,NNN	2
KIT	PDOZZ	5820012221107	80063	PPL-10323	TRANSITION KIT,ELEC RADIO RACK ASSEMBLY,AN/VRC-47 AND TSEC/KY-57... UOC:AVY,A13,A14,BVY,B17,B18,C17,HVY, H13,H14,H17,H18,NNN	1
					ADAPTER,ANTENNA TO (1) 414-4	
					BOLT,MACHINE (8) 413-1	
					BOLT,MACHINE (8) 413-11	
					BOLT,MACHINE (3) 414-7	
					BRACKET,ANGLE (1) 413-9	
					CABLE ASSEMBLY,RADI(1) 414-1	
					CLAMP,LOOP (1) 414-12	
					CLAMP,LOOP (8) 414-14	

(1) ITEM NO	(2) SMR CODE	(3) NSN	(4) CAGEC	(5) PART NUMBER	(6) DESCRIPTION AND USABLE ON CODES(UOC)	(7) QTY
					CLAMP,LOOP (2) 414-15	
					CLAMP,LOOP (2) 414-17	
					CLAMP,LOOP (2) 414-18	
					CLAMP,LOOP (1) 414-19	
					CLAMP,LOOP (1) 414-20	
					CLAMP,LOOP (1) 414-23	
					GROMMET,NONMETALLIC(1) 414-8	
					GROMMET,NONMETALLIC(1) 414-21	
					NUT,PLAIN,HEXAGON (8) 413-10	
					NUT,PLAIN,ASSEMBLED(6) 414-13	
					NUT,SELF-LOCKING,HE(6) 413-5	
					NUT,SELF-LOCKING,HE(8) 413-6	
					NUT,SELF-LOCKING,HE(4) 414-9	
					NUT,SELF-LOCKING,HE(3) 414-11	
					NUT,SELF-LOCKING,HE(4) 414-22	
					SCREW,CAP,HEXAGON H(2) 413-8	
					SCREW,CAP,HEXAGON H(4) 414-2	
					SCREW,MACHINE (2) 413-3	
					SHELF,AUXILIARY (1) 413-7	
					STRAP,TIEDOWN,ELECT(2) 414-24	
					SUPPORT,ANTENNA (1) 414-5	
					WASHER,FLAT (32) 413-2	
					WASHER,FLAT (8) 413-4	
					WASHER,FLAT (8) 414-3	
					WASHER,FLAT (3) 414-6	
					WASHER,FLAT (3) 414-10	
					WASHER,LOCK (2) 414-16	

END OF FIGURE

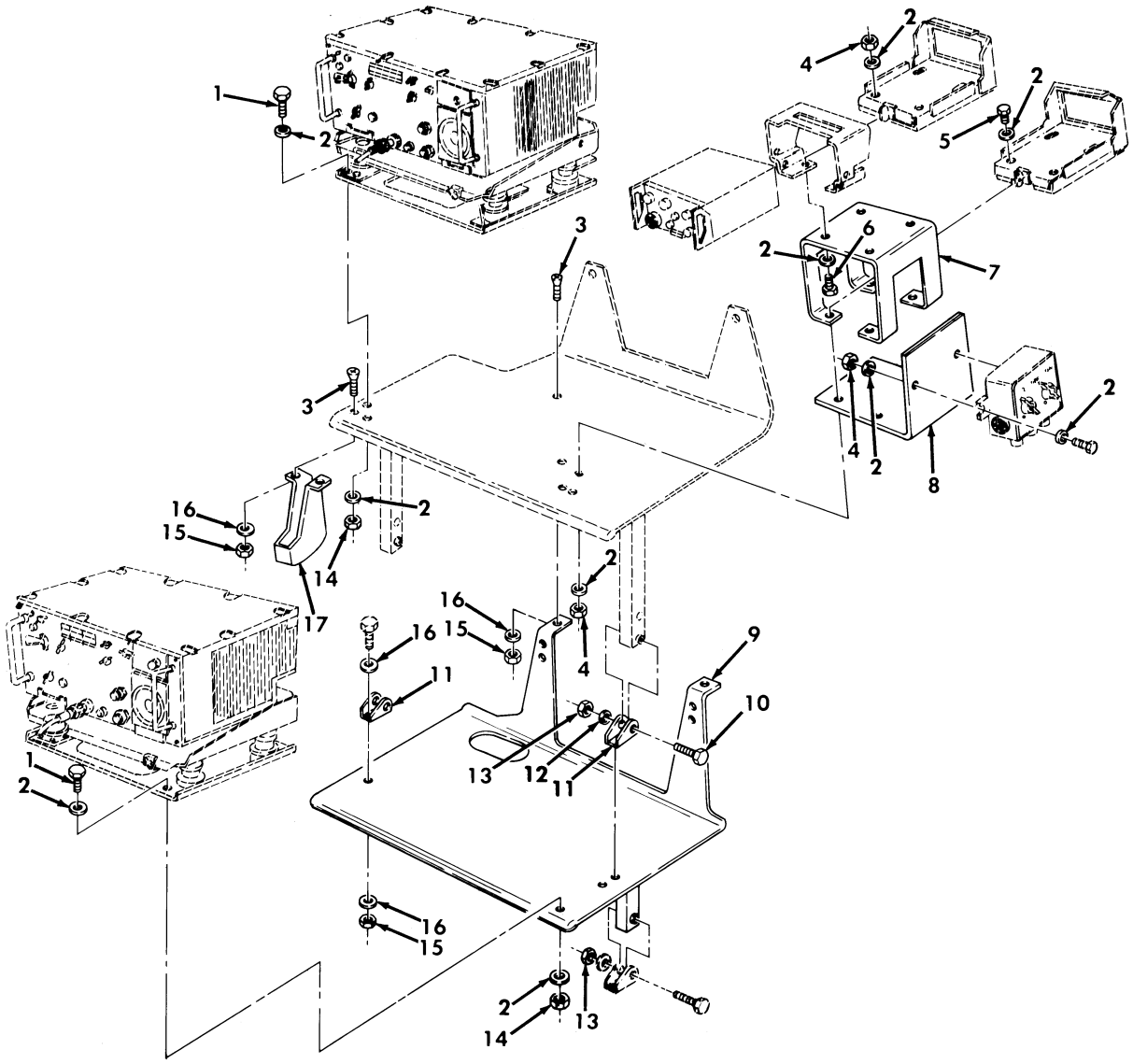

Figure 415. Communications Kit, Radio Rack Assembly, AN/VRC-49, and (2) TSEC/KY-57 Assemblies.

(1) ITEM NO	(2) SMR CODE	(3) NSN	(4) CAGEC	(5) PART NUMBER	(6) DESCRIPTION AND USABLE ON CODES(UOC)	(7) QTY
					GROUP 3307 SPECIAL PURPOSE KITS	
					FIG. 415 COMMUNICATIONS KIT,RADIO RACK ASSEMBLY,AN/VRC-49 AND (2) TSEC/KY-57 ASSEMBLIES	
1	PAOZZ	5306002558499	96906	MS90725-34	BOLT,MACHINE 5/16-18 X 1.00 PART OF KIT P/N PPL-10324..... UOC:AVY,A13,A14,BVY,HVY,H13,H14,NNN	10
* 2	PAOZZ	5310011191024	24617	2436162	WASHER,FLAT 5/16 PART OF KIT P/N PPL-10324..... UOC:AVY,A13,A14,BVY,HVY,H13,H14,NNN	40
3	PAOZZ	5305007195021	96906	MS51959-81	SCREW,MACHINE 1/4-20 X .75 PART OF KIT P/N PPL-10324..... UOC:AVY,A13,A14,BVY,HVY,H13,H14,NNN	6
4	PAOZZ	5310002416658	96906	MS51943-34	NUT,SELF-LOCKING,HE 5/16-24 PART OF KIT P/N PPL-10324..... UOC:AVY,A13,A14,BVY,HVY,H13,H14,NNN	10
5	PAOZZ	5306000514077	80204	B1821BH031F113N	BOLT,MACHINE 5/16-24 X 1.125 PART OF KIT P/N PPL-10324..... UOC:AVY,A13,A14,BVY,HVY,H13,H14,NNN	4
6	PAOZZ	5306012552662	34623	5593359	BOLT,MACHINE 5/16-24 X .88 PART OF KIT P/N PPL-10324..... UOC:AVY,A13,A14,BVY,HVY,H13,H14,NNN	4
7	PAOZZ	5340012491590	19207	12340639	BRACKET,MOUNTING PART OF KIT P/N PPL -10324..... UOC:AVY,A13,A14,BVY,HVY,H13,H14,NNN	1
8	PFOZZ	5340012559514	19207	12340636	BRACKET,ANGLE PART OF KIT P/N PPL-10324..... UOC:AVY,A13,A14,BVY,HVY,H13,H14,NNN	1
9	PAOZZ	2540012507590	19207	12340581	RACK ASSEMBLY,RADIO PART OF KIT P/N PPL-10324..... UOC:AVY,A13,A14,BVY,HVY,H13,H14,NNN	1
10	PAOZZ	5306010684592	96906	MS35764-1303	BOLT,SELF-LOCKING 3/8-16 X 2.25 PART OF KIT P/N PPL-10324..... UOC:AVY,A13,A14,BVY,HVY,H13,H14,NNN	2
11	PFOZZ	2590012028546	19207	12340134	BRACKET,VEHICULAR C PART OF KIT P/N PPL-10324..... UOC:AVY,A13,A14,BVY,HVY,H13,H14,NNN	2
12	PAOZZ	5310014124013	24617	2436163	WASHER,FLAT 3/8 PART OF KIT P/N PPL -10324..... UOC:AVY,A13,A14,BVY,HVY,H13,H14,NNN	2
13	PAOZZ	5310009359021	96906	MS51943-35	NUT,SELF-LOCKING,HE 3/8-16 PART OF KIT P/N PPL-10324..... UOC:AVY,A13,A14,BVY,HVY,H13,H14,NNN	4
14	PAOZZ	5310008140673	96906	MS51943-33	NUT,SELF-LOCKING,HE 5/16-18 PART OF KIT P/N PPL-10324..... UOC:AVY,A13,A14,BVY,HVY,H13,H14,NNN	10
15	PAOZZ	5310000614650	96906	MS51943-31	NUT,SELF-LOCKING,HE 1/4-20 PART OF KIT P/N PPL-10324..... UOC:AVY,A13,A14,BVY,HVY,H13,H14,NNN	10
16	PAOZZ	5310011023270	24617	2436161	WASHER,FLAT 1/4 PART OF KIT P/N PPL -10324.....	14

(1) ITEM NO	(2) SMR CODE	(3) NSN	(4) CAGEC	(5) PART NUMBER	(6) DESCRIPTION AND USABLE ON CODES(UOC)	(7) QTY
17	PFOZZ	2540012028545	19207	12340131	UOC:AVY,A13,A14,BVY,HVY,H13,H14,NNN BRACKET,HEAD PHONE PART OF KIT P/N PPL-10324..... UOC:AVY,A13,A14,BVY,HVY,H13,H14	1

END OF FIGURE

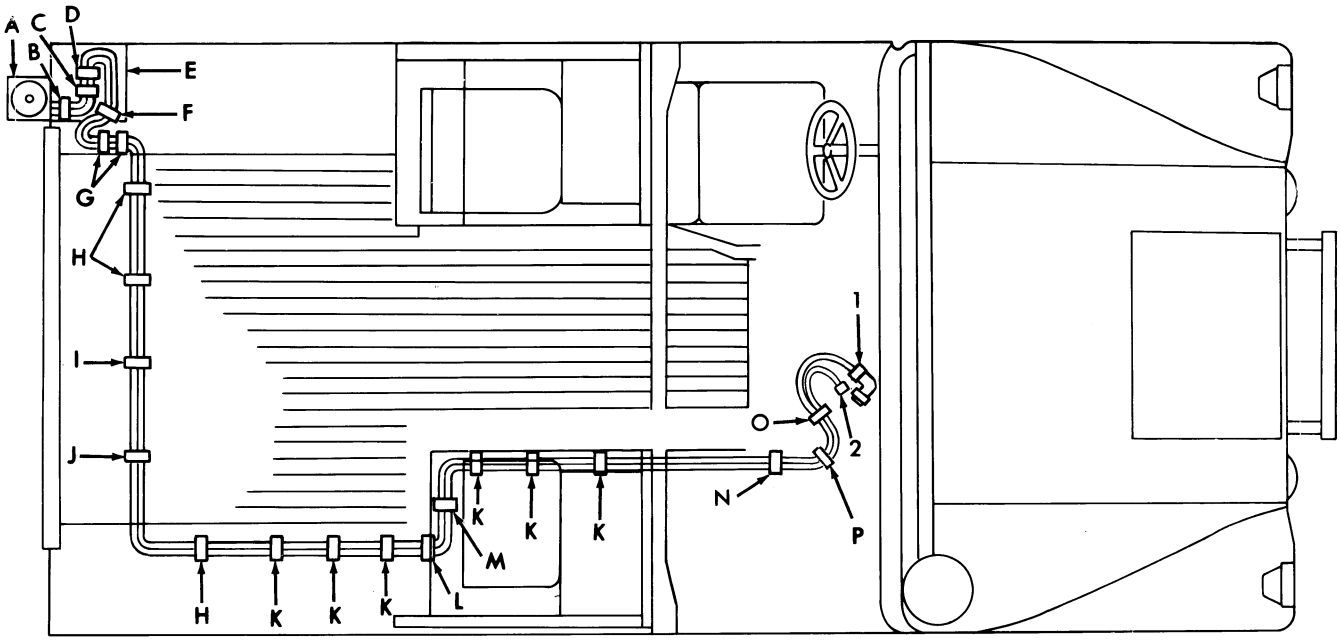

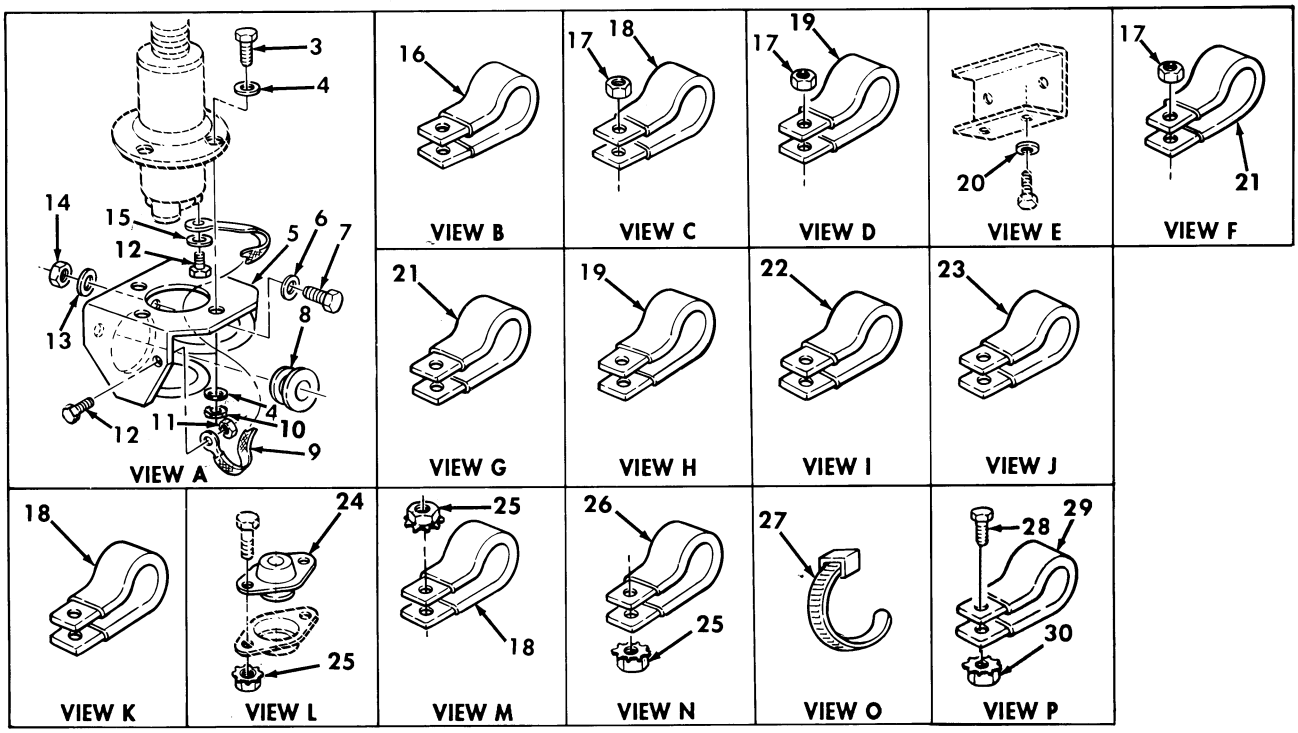

Figure 416. Communications Kit, Radio Cables, AN/VRC-49 and (2) TSEC/KY-57 Assemblies.

(1) ITEM NO	(2) SMR CODE	(3) NSN	(4) CAGEC	(5) PART NUMBER	(6) DESCRIPTION AND USABLE ON CODES(UOC)	(7) QTY
					GROUP 3307 SPECIAL PURPOSE KITS	
					FIG. 416 COMMUNICATIONS KIT,RADIO CABLES,AN/VRC-49 AND (2) TSEC/KY-57 ASSEMBLIES	
1	PAOZZ	5995012516785	19207	12338089-4	CABLE ASSEMBLY,SPEC PART OF KIT P/N PPL-10324..... UOC:AVY,A13,A14,BVY,HVY,H13,H14,NNN	1
2	PAOZZ	5995012519316	19207	12338086-4	CABLE ASSEMBLT,RADI PART OF KIT P/N PPL-10324..... UOC:AVY,A13,A14,BVY,HVY,H13,H14,NNN	1
3	PAOZZ	5305000680502	96906	MS90725-6	SCREW,CAP,HEXAGON H 3/8-16 X 2.00, PART OF KIT P/N PPL-10324..... UOC:AVY,A13,A14,BVY,HVY,H13,H14,NNN	4
4	PAOZZ	5310014124013	19207	2436163	WASHER,FLAT 3/8,PART OF KIT P/N PPL-10324..... UOC:AVY,A13,A14,BVY,HVY,H13,H14,NNN	8
5	PFOZZ	5340011975470	19207	12340364	BRACKET,ANTENNA PART OF KIT P/N PPL-10324..... UOC:AVY,A13,A14,BVY,HVY,H13,H14,NNN	1
* 6	PAOZZ	5310011191024	24617	2436162	WASHER,FLAT 5/16,PART OF KIT P/N PPL-10324..... UOC:AVY,A13,A14,BVY,HVY,H13,H14,NNN	3
7	PAOZZ	5306002258499	96906	MS90725-34	BOLT,MACHINE 5/16-18 X 1.00,PART OF KIT P/N PPL-10324..... UOC:AVY,A13,A14,BVY,HVY,H13,H14,NNN	3
8	PAOZZ	5325012085424	19207	12338098	GROMMET,NONMETALLIC PART OF KIT P/N PPL-10324..... UOC:AVY,A13,A14,BVY,HVY,H13,H14,NNN	1
9	PAOZZ	6150012078120	19207	12338099-1	LEAD,ELECTRICAL PART OF KIT P/N PPL-10324..... UOC:AVY,A13,A14,BVY,HVY,H13,H14,NNN	1
10	PAOZZ	5310009359021	96906	MS51943-35	NUT,SELF-LOCKING,HE 3/8-16,PART OF KIT P/N PPL-10324..... UOC:AVY,A13,A14,BVY,HVY,H13,H14,NNN	4
11	PAOZZ	5310002514503	24617	9411893	NUT,SELF-LOCKING,HE #10-32,PART OF KIT P/N PPL-10324..... UOC:AVY,A13,A14,BVY,HVY,H13,H14,NNN	1
12	PAOZZ	5305000593659	96906	MS51958-63	SCREW,MACHINE #10-32 X .50,PART OF KIT P/N PPL-10324..... UOC:AVY,A13,A14,BVY,HVY,H13,H14,NNN	2
13	PAOZZ	5310012087576	19207	12338095	WASHER,FLAT 5/16,PART OF KIT P/M PPL-10324..... UOC:AVY,A13,A14,BVY,HVY,H13,H14,NNN	3
14	PAOZZ	5310008140673	96906	MS51943-33	NUT,SELF-LOCKING,HE 5/16-18,PART OF KIT P/N PPL-10323..... UOC:AVY,A13,A14,BVY,HVY,H13,H14,NNN	3
15	PAOZZ	5310000453296	96906	MS35338-43	WASHER,LOCK #10,PART OF KIT P/N PPL-10324..... UOC:AVY,A13,A14,BVY,HVY,H13,H14,NNN	1
16	PAOZZ	5340008546730	96906	MS21333-124	CLAMP,LOOP PART OF KIT P/N PPL-10324 UOC:AVY,A13,A14,BVY,HVY,H13,H14,NNN	1

(1) ITEM NO	(2) SMR CODE	(3) NSN	(4) CAGEC	(5) PART NUMBER	(6) DESCRIPTION AND USABLE ON CODES(UOC)	(7) QTY
17	PFOZZ	5310001249265	72582	271169	NUT,SELF-LOCKING,HE PART OF KIT P/N PPL-10324..... UOC:AVY,A13,A14,BVY,HVY,H13,H14,NNN	3
18	PAOZZ	5340000572906	96906	MS21333-73	CLAMP,LOOP PART OF KIT P/N PPL-10324 UOC:AVY,A13,A14,BVY,HVY,H13,H14,NNN	8
19	PAOZZ	5340009226300	96906	MS21333-77	CLAMP,LOOP PART OF KIT P/N PPL-10324 UOC:AVY,A13,A14,BVY,HVY,H13,H14,NNN	4
20	PAOZZ	5310005825965	96906	MS35338-44	WASHER,LOCK 1/4,PART OF KIT P/N PPL-10324..... UOC:AVY,A13,A14,BVY,HVY,H13,H14,NNN	2
21	PAOZZ	5340007247038	96906	MS21333-76	CLAMP,LOOP PART OF KIT P/N PPL-10324 UOC:AVY,A13,A14,BVY,HVY,H13,H14,NNN	3
22	PFOZZ	5340009588457	96906	MS21333-78	CLAMP,LOOP PART OF KIT P/N PPL-10324 UOC:AVY,A13,A14,BVY,HVY,H13,H14,NNN	1
23	PAOZZ	5340000502740	96906	MS21333-75	CLAMP,LOOP PART OF KIT P/N PPL10324 UOC:AVY,A13,A14,BVY,HVY,H13,H14,NNN	1
24	PAOZZ	5325012555063	19207	12340631	GROMMET,NONMETALLIC PART OF KIT P/N PPL-10324..... UOC:AVY,A13,A14,BVY,HVY,H13,H14,NNN	1
25	PAOZZ	5310011520598	34623	5592818	NUT,SELF-LOCKING,HE 1/4-20,PART OF KIT P/N PPL-10324..... UOC:AVY,A13,A14,BVY,HVY,H13,H14,NNN	4
26	PAOZZ	5340000881254	96906	MS21333-104	CLAMP,LOOP PART OF KIT P/N PPL-10324 UOC:AVY,A13,A14,BVY,HVY,H13,H14,NNN	1
* 27	PAOZZ	5975010345871	96906	MS3367-7-0	STRAP,TIEDOWN,ELECT PART OF KIT P/N PPL-10324..... UOC:AVY,A13,A14,BVY,HVY,H13,H14,NNN	1
28	PAOZZ	5305009897434	96906	MS35207-263	SCREW,MACHINE..... UOC:AVY,A13,A14,BVY,HVY,H13,H14,NNN	1
29	PAOZZ	5340000502740	96906	MS21333-75	CLAMP,LOOP..... UOC:AVY,A13,A14,BVY,HVY,H13,H14,NNN	1
30	PAOZZ	5310001249265	24617	271169	NUT,PLAIN,ASSEMBLED..... UOC:AVY,A13,A14,BVY,HVY,H13,H14,NNN	1
KIT	PDOZZ	5820012221106	80036	PPL-10324	TRANSITION KIT,ELEC RADIO RACK ASSEMBLY,AN/VRC-49 RADIO AND TSCE/.. KY-57 ASSEMBLIES..... UOC:AVY,A13,A14,BVY,HVY,H13,H14,NNN	1
					BOLT,MACHINE (10) 415-1	
					BOLT,MACHINE (4) 415-5	
					BOLT,MACHINE (4) 415-6	
					BOLT,MACHINE (3) 416-7	
					BOLT,SELF-LOCKING (2) 415-10	
					BRACKET,ANGLE (1) 415-8	
					BRACKET,ANTENNA (1) 416-5	
					BRACKET,HEAD PHONE (1) 415-17	
					BRACKET,MOUNTING (1) 415-7	
					BRACKET,VEHICULAR C(2) 415-11	
					CABLE ASSEMBLY,RADI(1) 416-2	
					CABLE ASSEMBLY,SPEC(1) 416-1	
					CLAMP,LOOP (1) 416-16	
					CLAMP,LOOP (8) 416-18	
					CLAMP,LOOP (4) 416-19	

(1) ITEM NO	(2) SMR CODE	(3) NSN	(4) CAGEC	(5) PART NUMBER	(6) DESCRIPTION AND USABLE ON CODES(UOC)	(7) QTY
					CLAMP,LOOP (3) 416-21	
					CLAMP,LOOP (1) 416-22	
					CLAMP,LOOP (1) 416-23	
					CLAMP,LOOP (1) 416-26	
					GROMMET,NONMETALLIC(1) 416-8	
					GROMMET,NONMETALLIC(1) 416-24	
					LEAD,ELECTRICAL (1) 416-9	
					NUT,SELF-LOCKING,HE(4) 416-25	
					NUT,SELF-LOCKING,HE(10) 415-4	
					NUT,SELF-LOCKING,HE(4) 415-13	
					NUT,SELF-LOCKING,HE(10) 415-14	
					NUT,SELF-LOCKING,HE(10) 415-15	
					NUT,SELF-LOCKING,HE(4) 416-10	
					NUT,SELF0LOCKING,HE(1) 416-11	
					NUT,SELF-LOCKING,HE(3) 416-14	
					NUT,SELF-LOCKING,HE(4) 416-17	
					RACK ASSEMBLY,RADIO(1) 415-9	
					SCREW,CAP,HEXAGON H(6) 415-3	
					SCREW,CAP,HEXAGON H(4) 416-3	
					SCREW,MACHINE (2) 416-12	
					STRAP,TIEDOWN,ELECT(1) 416-27	
					WASHER,FLAT (40) 415-2	
					WASHER,FLAT (2) 415-12	
					WASHER,FLAT (14) 415-16	
					WASHER,FLAT (8) 416-4	
					WASHER,FLAT (3) 416-6	
					WASHER,FLAT (3) 416-13	
					WASHER,LOCK (1) 416-15	
					WASHER,LOCK (2) 416-20	

END OF FIGURE

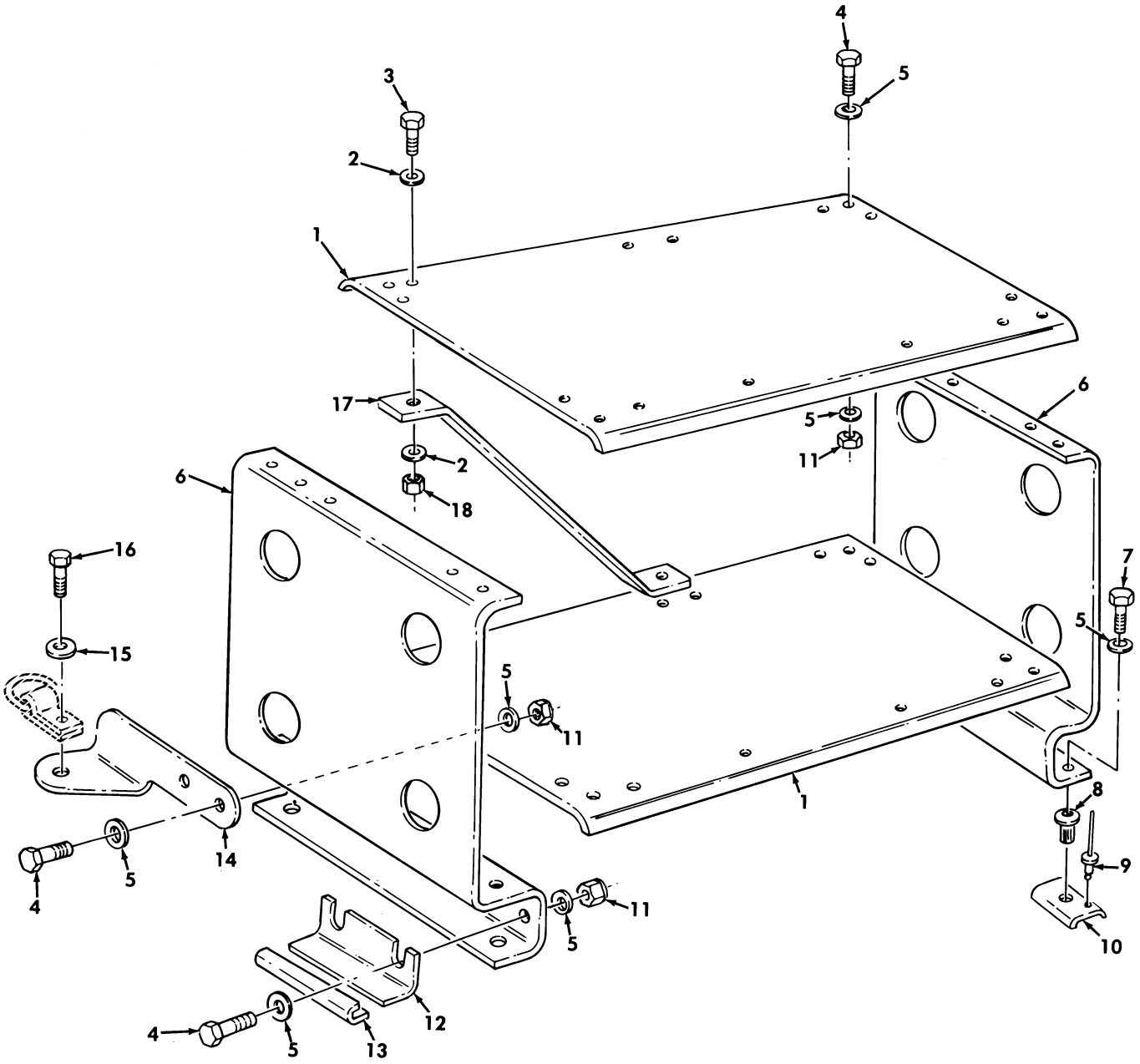

Figure 417. Communications Kit, Radio Rack Assembly.

(1) ITEM NO	(2) SMR CODE	(3) NSN	(4) CAGEC	(5) PART NUMBER	(6) DESCRIPTION AND USABLE ON CODES(UOC)	(7) QTY
					GROUP 3307 SPECIAL PURPOSE KITS	
					FIG. 417 COMMUNICATIONS KIT,RADIO RACK ASSEMBLY	
1	PFOZZ	5975013125469	34623	5596795	SHELF,ELECTRICAL EQ PART OF KIT P/N 5596946..... UOC:A13,A14,H13,H14	2
2	PAOZZ	5310012510748	34623	5593691	WASHER,FLAT 1/4 PART OF KIT P/N 5596946..... UOC:A13,A14,H13,H14	8
3	PAOZZ	5305002253843	80204	B1821BH025C100N	SCREW,CAP,HEXAGON H 1/4-20 X 1.00 PART OF KIT P/N 5596946..... UOC:A13,A14,H13,H14	4
4	PAOZZ	5306002264828	80204	B1821BH031C113N	BOLT,MACHINE 5/16-18 X 1.125 PART OF KIT P/N 5596946..... UOC:A13,A14,H13,H14	14
* 5	PAOZZ	5310011191024	24617	2436162	WASHER,FLAT 5/16 PART OF KIT P/N 5596946..... UOC:A13,A14,H13,H14	32
6	PAOZZ	5340012902279	34623	5596794	BRACKET,MOUNTING PART OF KIT P/N 5596946..... UOC:A13,A14,H13,H14	2
7	PAOZZ	5306002264829	80204	B1821BH031C125N	BOLT,MACHINE 5/16-18 X 1.25 PART OF KIT P/N 5596946..... UOC:A13,A14,H13,H14	4
8	PAOZZ	5310011981724	03481	S31P280	NUT,PLAIN,BLIND RIV 5/16-18 PART OF KIT P/N 5596946..... UOC:A13,A14,H13,H14	4
9	PAOZZ	5320012544251	34623	5593050	RIVET,BLIND PART OF KIT P/N 5596946. UOC:A13,A14,H13,H14	8
10	PAOZZ	5340012915711	34623	5588193	BRACKET,DOUBLE ANGL PART OF KIT P/N 5596946..... UOC:A13,A14,H13,H14	4
11	PAOZZ	5310008140673	96906	MS51943-33	NUT,SELF-LOCKING,HE 5/16-18 PART OF KIT P/N 5596946..... UOC:A13,A14,H13,H14	14
12	PAOZZ	5340012914537	34623	5597356	BRACKET,ANGLE PART OF KIT P/N 5596946..... UOC:A13,A14,H13,H14	1
13	PAOZZ	2590012911033	34623	5595551	PROTECTOR,EDGE PART OF KIT P/N 5596946..... UOC:A13,A14,H13,H14	1
14	PAOZZ	5340012989691	34623	5597372	BRACKET,ANGLE R.H. PART OF KIT P/N 5596946..... UOC:A13,A14,H13,H14	1
14	PAOZZ	5340012906342	34623	5597350	BRACKET,ANGLE L.H. PART OF KIT P/N 5596946..... UOC:A13,A14,H13,H14	1
15	PAOZZ	5310012538948	34623	5593320	WASHER,FLAT .50 PART OF KIT P/N 5596946..... UOC:A13,A14,H13,H14	2
16	PAOZZ	5305000712069	52304	113324	SCREW,CAP,HEXAGON H 1/2-13 X 1.50	2

(1) ITEM NO	(2) SMR CODE	(3) NSN	(4) CAGEC	(5) PART NUMBER	(6) DESCRIPTION AND USABLE ON CODES(UOC)	(7) QTY
					PART OF KIT P/N 5596946..... UOC:A13,A14,H13,H14	
17	PAOZZ	5340012908390	34623	5597086	BRACKET,MOUNTING PART OF KIT P/N 5596946..... UOC:A13,A14,H13,H14	2
18	PAOZZ	5310000614650	96906	MS51943-31	NUT,SELF-LOCKING,HE 1/4-20 PART OF KIT P/N 5596946..... UOC:A13,A14,H13,H14	4

END OF FIGURE

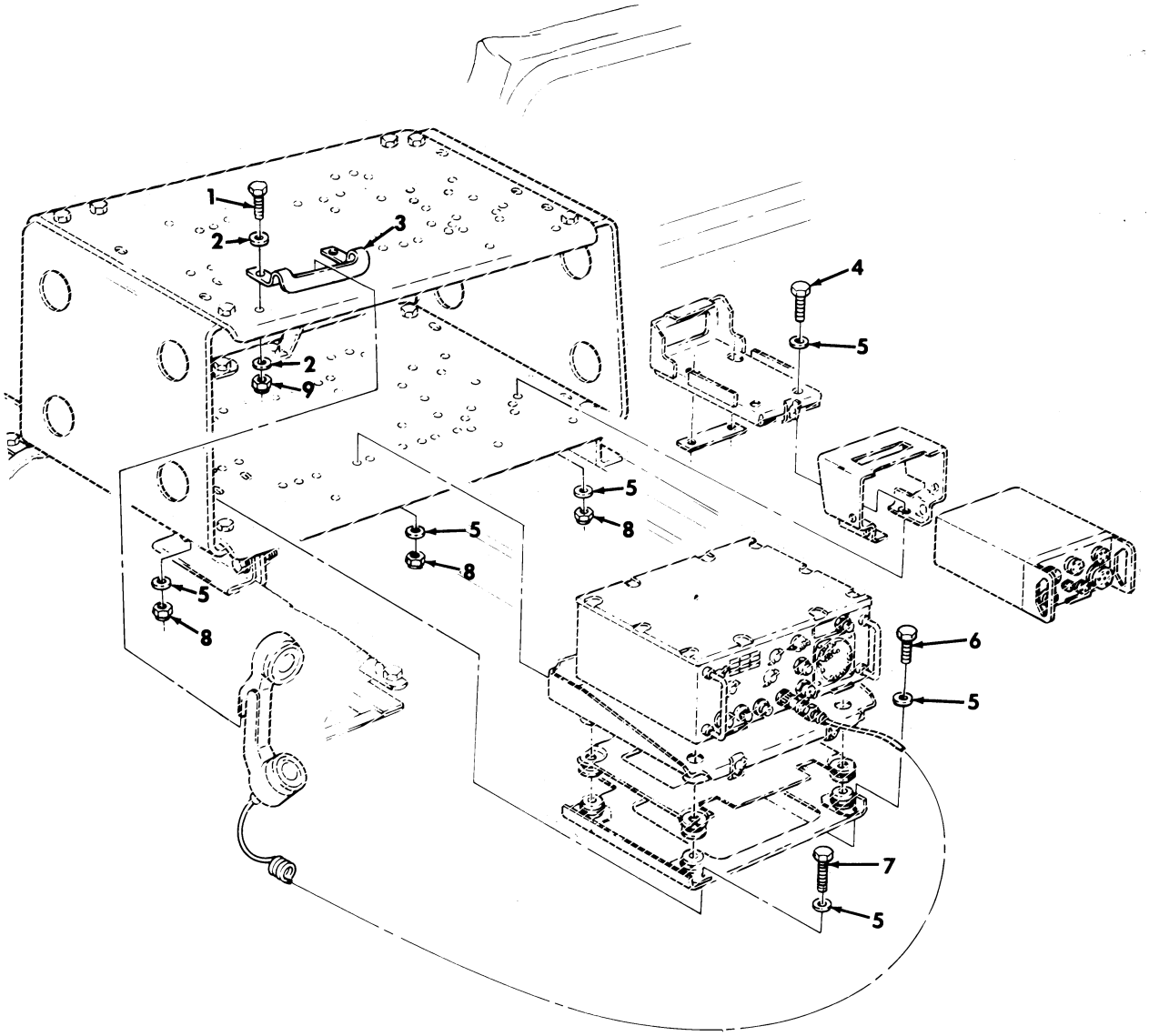

Figure 418. Communications Kit, Radio Rack Assembly Mounting Hardware, AN/VRC-46.

(1) ITEM NO	(2) SMR CODE	(3) NSN	(4) CAGEC	(5) PART NUMBER	(6) DESCRIPTION AND USABLE ON CODES(UOC)	(7) QTY
					GROUP 3307 SPECIAL PURPOSE KITS	
					FIG. 418 COMMUNICATIONS KIT,RADIO RACK ASSEMBLY MOUNTING HARDWARE, AN/VRC-46	
1	PAOZZ	5305000712505	80204	MS90728-7	SCREW,CAP,HEXAGON H 1/4-20 X 7/8 PART OF KIT P/N 5596946..... UOC:A13,A14,H13,H14	2
2	PAOZZ	5310012510748	34623	5593691	WASHER,FLAT 1/4 PART OF KIT P/N 5596946..... UOC:A13,A14,H13,H14	4
3	PAOZZ	5340012918915	34623	5597357	BRACKET,MOUNTING PART OF KIT P/N 5596946..... UOC:A13,A14,H13,H14	1
4	PAOZZ	5306002258498	96906	MS90725-33	BOLT,MACHINE 5/16-18 X 7/8 PART OF KIT P/N 5596946..... UOC:A13,A14,H13,H14	4
* 5	PAOZZ	5310011191024	24617	2436162	WASHER,FLAT 5/16 PART OF KIT P/N 5596946..... UOC:A13,A14,H13,H14	18
6	PAOZZ	5306002258499	96906	MS90725-34	BOLT,MACHINE 5/16-18 X 1.00 PART OF KIT P/N 5596946..... UOC:A13,A14,H13,H14	3
7	PAOZZ	5306002264828	80204	B1821BH031C113N	BOLT,MACHINE 5/16-18 X 1.125 PART OF KIT P/N 5596946..... UOC:A13,A14,H13,H14	2
8	PAOZZ	5310008140673	96906	MS51943-33	NUT,SELF-LOCKING,HE 5/16-18 PART OF KIT P/N 5596946..... UOC:A13,A14,H13,H14	9
9	PAOZZ	5310000614650	96906	MS51943-31	NUT,SELF-LOCKING,HE 1/4-20 PART OF KIT P/N 5596946..... UOC:A13,A14,H13,H14	2

END OF FIGURE

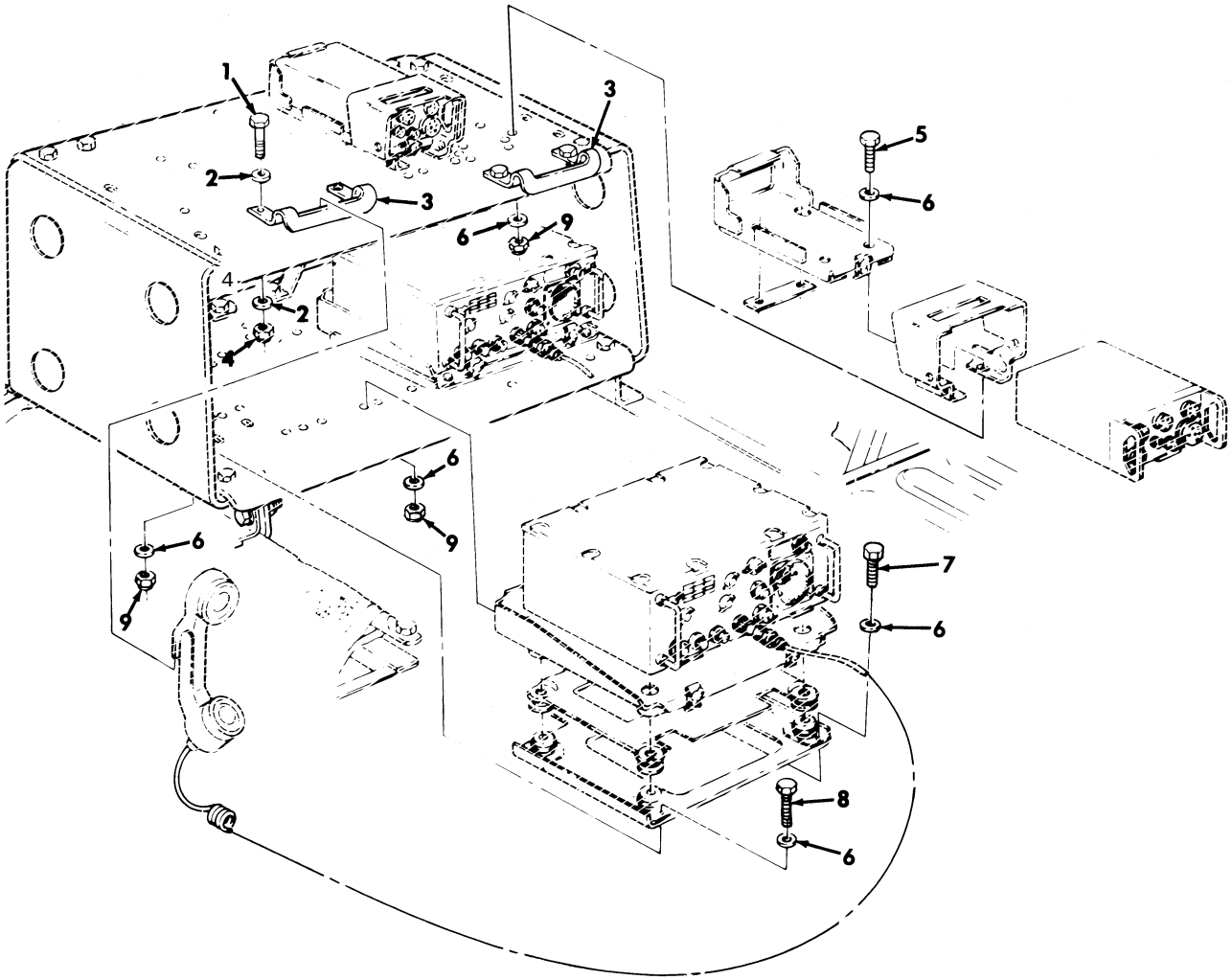

Figure 419. Communications Kit, Radio Rack Assembly Mounting Hardware, (2) AN/VRC-46.

(1) ITEM NO	(2) SMR CODE	(3) NSN	(4) CAGEC	(5) PART NUMBER	(6) DESCRIPTION AND USABLE ON CODES(UOC)	(7) QTY
					GROUP 3307 SPECIAL PURPOSE KITS	
					FIG. 419 COMMUNICATIONS KIT,RADIO RACK ASSEMBLY MOUNTING HARDWARE, (2) AN/VRC-46	
1	PAOZZ	5305000712505	80204	B1821BH025CO88N	SCREW,CAP,HEXAGON H 1/4-20 X 7/8 PART OF KIT P/N 5596946..... UOC:A13,A14,H13,H14	4
2	PAOZZ	5310012510748	34623	5593691	WASHER,FLAT 1/4 PART OF KIT P/N 5596946..... UOC:A13,A14,H13,H14	8
3	PAOZZ	5340012918915	34623	5597357	BRACKET,MOUNTING PART OF KIT P/N 5596946..... UOC:A13,A14,H13,H14	2
4	PAOZZ	5310000614650	96906	MS51943-31	NUT,SELF-LOCKING,HE 1/4-20 PART OF KIT P/N 5596946..... UOC:A13,A14,H13,H14	4
5	PAOZZ	5306002258498	96906	MS90725-33	BOLT,MACHINE 5/16-18 X 7/8 PART OF KIT P/N 5596946..... UOC:A13,A14,H13,H14	8
* 6	PAOZZ	5310011191024	24617	2436162	WASHER,FLAT 5/16 PART OF KIT P/N 5596946..... UOC:A13,A14,H13,H14	36
7	PAOZZ	5306002258499	96906	MS90725-34	BOLT,MACHINE 5/16-18 X 1.00 PART OF KIT P/N 5596946..... UOC:A13,A14,H13,H14	6
8	PAOZZ	5306002264828	80204	B1821BH031C113N	BOLT,MACHINE 5/16-18 X 1.125 PART OF KIT P/N 5596946..... UOC:A13,A14,H13,H14	4
9	PAOZZ	5310008140673	96906	MS51943-33	NUT,SELF-LOCKING,HE 5/16-18 PART OF KIT P/N 5596946..... UOC:A13,A14,H13,H14	18

END OF FIGURE

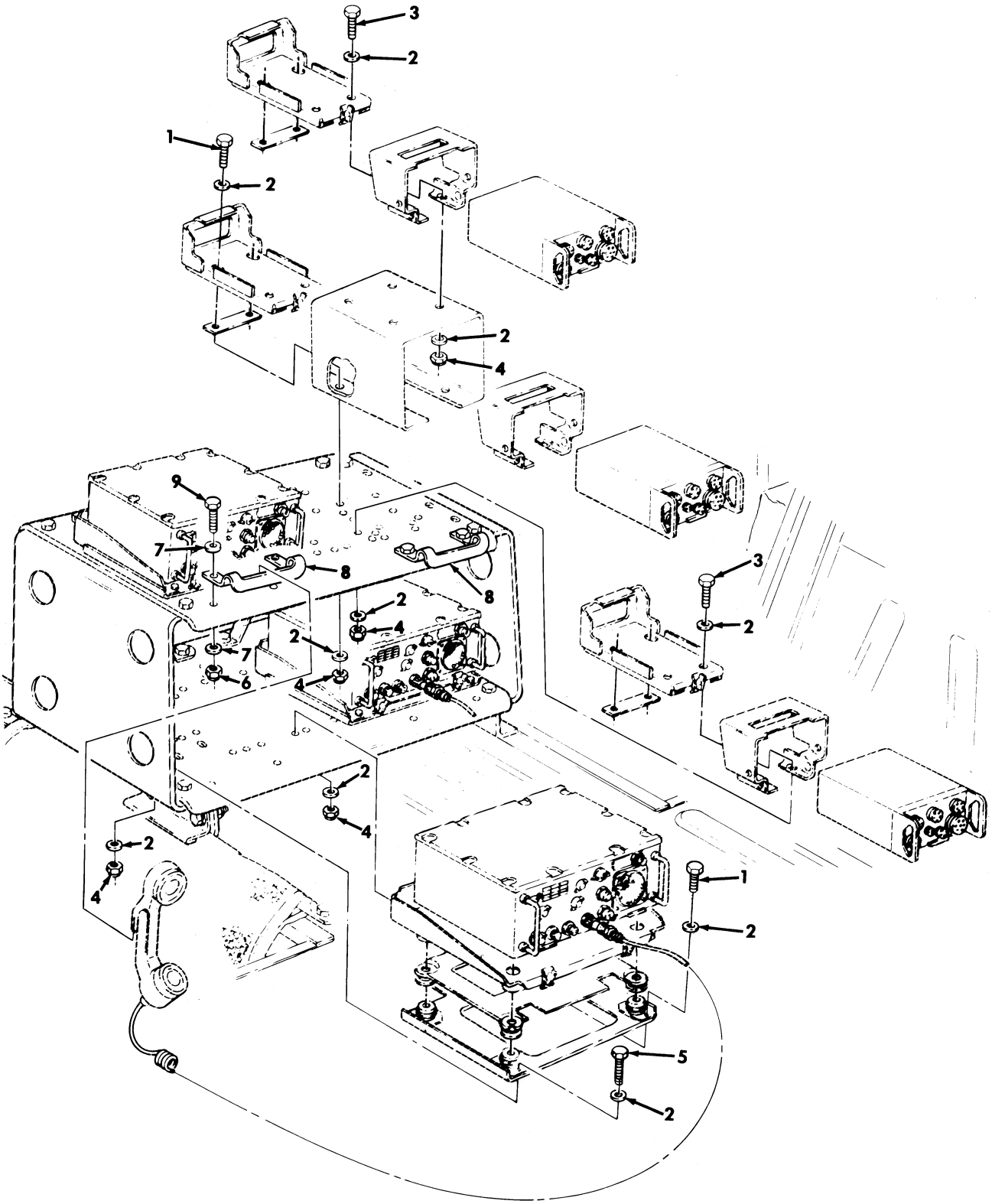

Figure 420. Communications Kit, Radio Rack Assembly Mounting Hardware, (3) AN/VRC-46.

(1) ITEM NO	(2) SMR CODE	(3) NSN	(4) CAGEC	(5) PART NUMBER	(6) DESCRIPTION AND USABLE ON CODES(UOC)	(7) QTY
					GROUP 3307 SPECIAL PURPOSE KITS	
					FIG. 420 COMMUNICATIONS KIT,RADIO RACK ASSEMBLY MOUNTING HARDWARE, (3) AN/VRC-46	
1	PAOZZ	5306002258499	96906	MS90725-34	BOLT,MACHINE 5/16-18 X 1.00 PART OF KIT P/N 5596946..... UOC:A13,A14,H13,H14	13
* 2	PAOZZ	5310011191024	24617	2436162	WASHER,FLAT 5/16 PART OF KIT P/N 5596946..... UOC:A13,A14,H13,H14	54
3	PAOZZ	5306002258498	96906	MS90725-33	BOLT,MACHINE 5/16-18 X .88 PART OF KIT P/N 5596946..... UOC:A13,A14,H13,H14	8
4	PAOZZ	5310008140673	96906	MS51943-33	NUT,SELF-LOCKING,HE 5/16-18 PART OF KIT P/N 5596946..... UOC:A13,A14,H13,H14	27
5	PAOZZ	5306002264828	80204	B1821BH031C113N	BOLT,MACHINE 5/16-18 X 1.125 PART OF KIT P/N 5596946..... UOC:A13,A14,H13,H14	6
6	PAOZZ	5310000614650	96906	MS51943-31	NUT,SELF-LOCKING,HE 1/4-20 PART OF KIT P/N 5596946..... UOC:A13,A14,H13,H14	4
7	PAOZZ	5310012510748	34623	5593691	WASHER,FLAT 1/4 PART OF KIT P/N 5596946..... UOC:A13,A14,H13,H14	8
8	PAOZZ	5340012918915	34623	5597357	BRACKET,MOUNTING PART OF KIT P/N 5596946..... UOC:A13,A14,H13,H14	2
9	PAOZZ	5305000712505	80204	MS90728-7	SCREW,CAP,HEXAGON H 1/4-20 X .88 PART OF KIT P/N 5596946..... UOC:A13,A14,H13,H14	4

END OF FIGURE

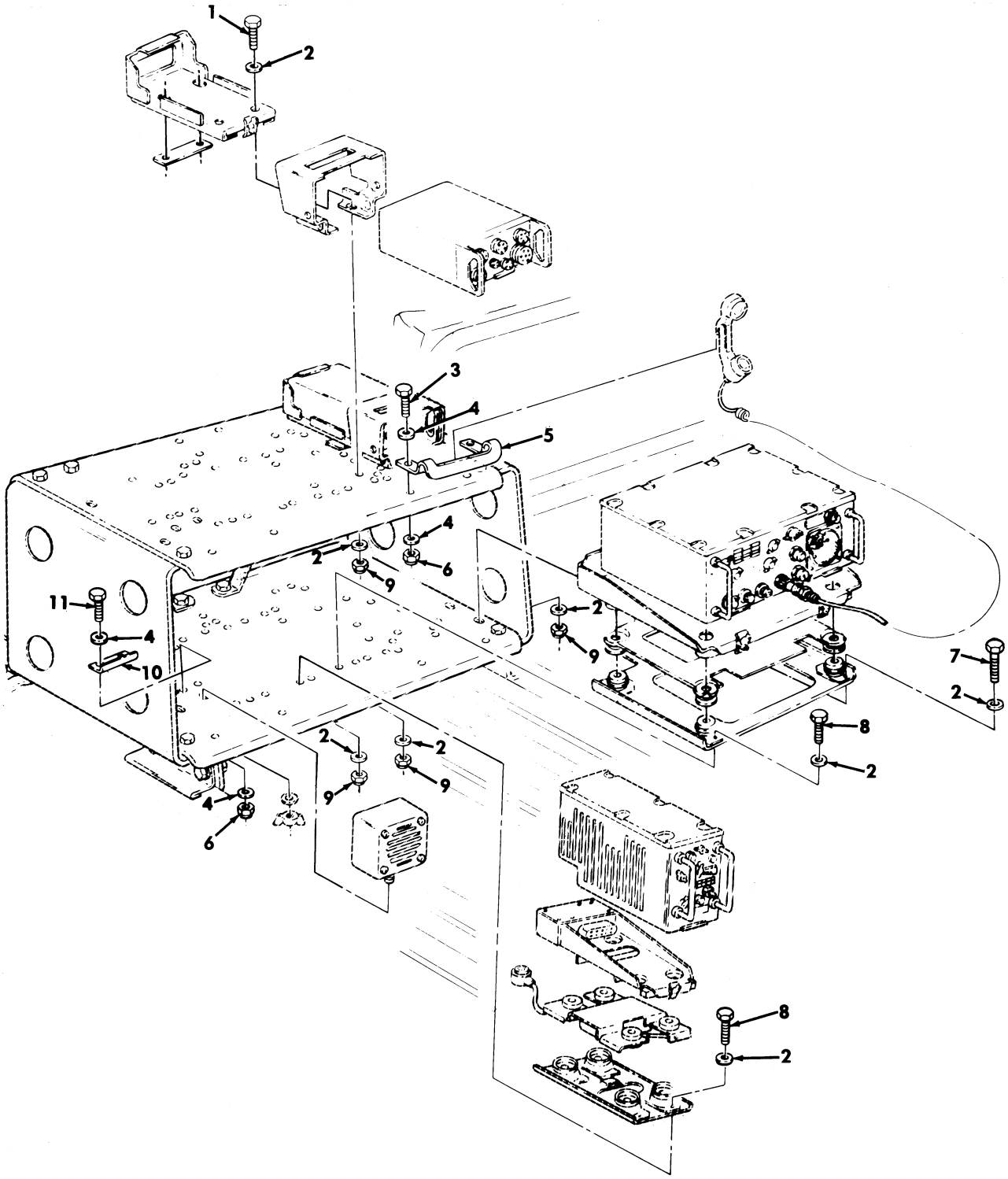

Figure 421. Communications Kit, Radio Rack Assembly Mounting Hardware, AN/VRC-47.

(1) ITEM NO	(2) SMR CODE	(3) NSN	(4) CAGEC	(5) PART NUMBER	(6) DESCRIPTION AND USABLE ON CODES(UOC)	(7) QTY
					GROUP 3307 SPECIAL PURPOSE KITS	
					FIG. 421 COMMUNICATIONS KIT,RADIO RACK ASSEMBLY MOUNTING HARDWARE, AN/VRC-47	
1	PAOZZ	5306002258498	96906	MS90725-33	BOLT,MACHINE 5/16-18 X .88 PART OF KIT P/N 5596946..... UOC:A13,A14,H13,H14	8
* 2	PAOZZ	5310011191024	24617	2436162	WASHER,FLAT 5/16 PART OF KIT P/N 5596946..... UOC:A13,A14,H13,H14	34
3	PAOZZ	5305000712505	80204	MS90728-7	SCREW,CAP,HEXAGON H 1/4-20 X .88 PART OF KIT P/N 5596946..... UOC:A13,A14,H13,H14	2
4	PAOZZ	5310012510748	34623	5593691	WASHER,FLAT 1/4 PART OF KIT P/N 5596946..... UOC:A13,A14,H13,H14	8
5	PAOZZ	5340012918915	34623	5597357	BRACKET,MOUNTING PART OF KIT P/N 5596946..... UOC:A13,A14,H13,H14	1
6	PAOZZ	5310000614650	96906	MS51943-31	NUT,SELF-LOCKING,HE 1/4-20 PART OF KIT P/N 5596946..... UOC:A13,A14,H13,H14	4
7	PAOZZ	5306002264828	80204	B1821BH031C113N	BOLT,MACHINE 5/16-18 X 1.125 PART OF KIT P/N 5596946..... UOC:A13,A14,H13,H14	2
8	PAOZZ	5306002258499	96906	MS90725-34	BOLT,MACHINE 5/16-18 X 1.00 PART OF KIT P/N 5596946..... UOC:A13,A14,H13,H14	7
9	PAOZZ	5310004722963	96906	MS51943-3	NUT,SELF-LOCKING,HE 5/16-18 PART OF KIT P/N 5596946..... UOC:A13,A14,H13,H14	17
10	PAOZZ	5340012551109	19207	12340635	BRACKET,ANGLE PART OF KIT P/N 5596946..... UOC:A13,A14,H13,H14	1
11	PAOZZ	5305000680502	96906	MS90725-6	SCREW,CAP,HEXAGON H 1/4-20 X .75 PART OF KIT P/N 5596946..... UOC:A13,A14,H13,H14	2

END OF FIGURE

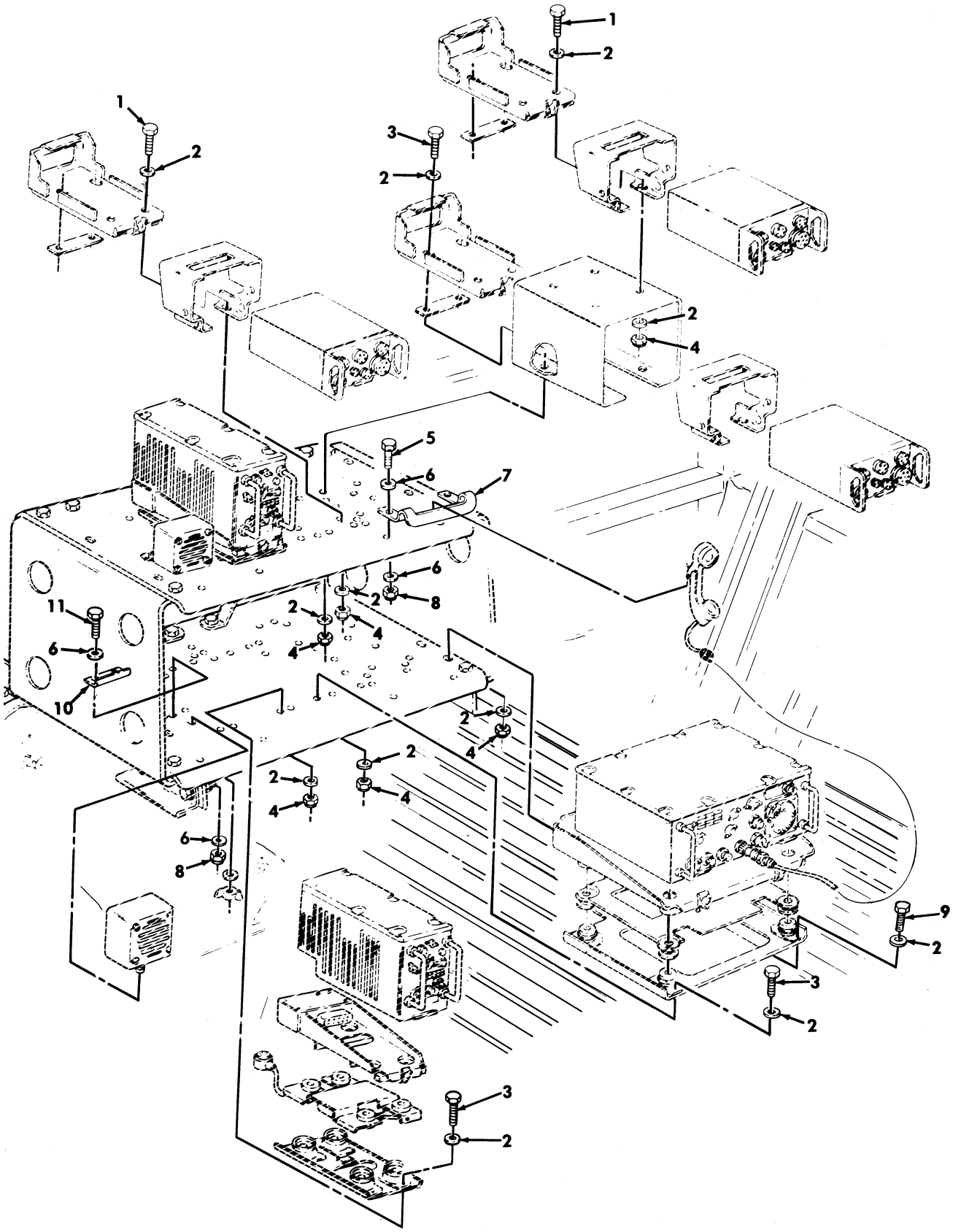

Figure 422. Communications Kit, Radio Rack Assembly Mounting Hardware, AN/VRC-48.

(1) ITEM NO	(2) SMR CODE	(3) NSN	(4) CAGEC	(5) PART NUMBER	(6) DESCRIPTION AND USABLE ON CODES(UOC)	(7) QTY
					GROUP 3307 SPECIAL PURPOSE KITS	
					FIG. 422 COMMUNICATIONS KIT,RADIO RACK ASSEMBLY MOUNTING HARDWARE, AN/VRC-48	
1	PAOZZ	5306002258498	96906	MS90725-33	BOLT,MACHINE 5/16-18 X .88 PART OF KIT P/N 5596946..... UOC:A13,A14,H13,H14	8
* 2	PAOZZ	5310011191024	24617	2436162	WASHER,FLAT 5/16 PART OF KIT P/N 5596946..... UOC:A13,A14,H13,H14	50
3	PAOZZ	5306002258499	96906	MS90725-34	BOLT,MACHINE 5/16-18 X 1.00 PART OF KIT P/N 5596946..... UOC:A13,A14,H13,H14	15
4	PAOZZ	5310004722963	96906	MS51943-3	NUT,SELF-LOCKING,HE 5/16-18 PART OF KIT P/N 5596946..... UOC:A13,A14,H13,H14	25
5	PAOZZ	5305000712505	80204	MS90728-7	SCREW,CAP,HEXAGON H 1/4-20 X .88 PART OF KIT P/N 5596946..... UOC:A13,A14,H13,H14	2
6	PAOZZ	5310012510748	34623	5593691	WASHER,FLAT 1/4 PART OF KIT P/N 5596946..... UOC:A13,A14,H13,H14	12
7	PAOZZ	5340012918915	34623	5597357	BRACKET,MOUNTING PART OF KIT P/N 5596946..... UOC:A13,A14,H13,H14	1
8	PAOZZ	5310000614650	96906	MS51943-31	NUT,SELF-LOCKING,HE 1/4-20 PART OF KIT P/N 5596946..... UOC:A13,A14,H13,H14	6
9	PAOZZ	5306002264828	80204	B1821BH031C113N	BOLT,MACHINE 5/16-18 X 1.125 PART OF KIT P/N 5596946..... UOC:A13,A14,H13,H14	2
10	PAOZZ	5340012551109	19207	12340635	BRACKET,ANGLE PART OF KIT P/N 5596946..... UOC:A13,A14,H13,H14	2
11	PAOZZ	5305000680502	96906	MS90725-6	SCREW,CAP,HEXAGON H 1/4-20 X .75 PART OF KIT P/N 5596946..... UOC:A13,A14,H13,H14	4

END OF FIGURE

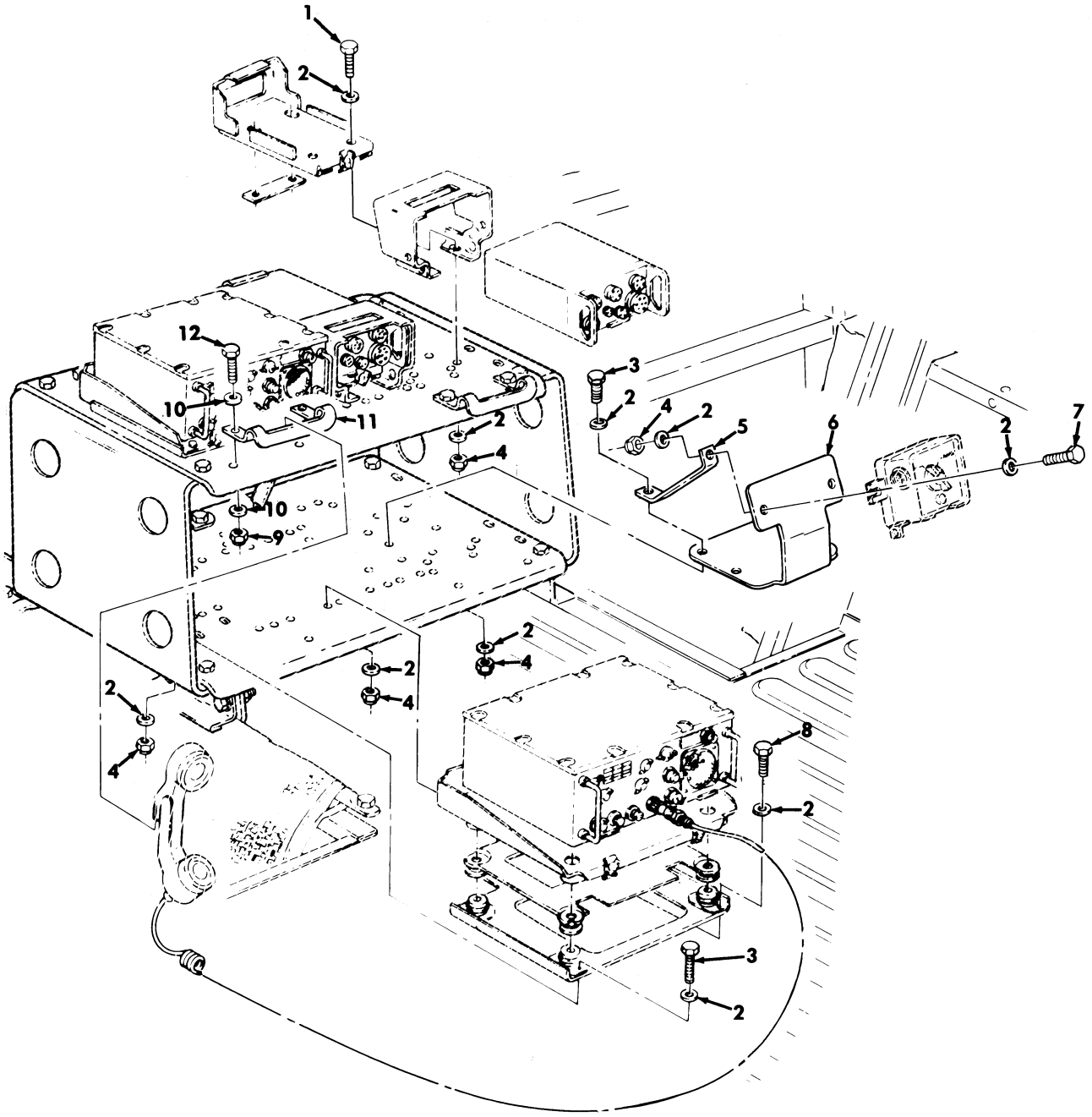

Figure 423. Communications Kit, Radio Rack Assembly Mounting Hardware, AN/VRC-49.

(1) ITEM NO	(2) SMR CODE	(3) NSN	(4) CAGEC	(5) PART NUMBER	(6) DESCRIPTION AND USABLE ON CODES(UOC)	(7) QTY
					GROUP 3307 SPECIAL PURPOSE KITS	
					FIG. 423 COMMUNICATIONS KIT,RADIO RACK ASSEMBLY MOUNTING HARDWARE, AN/VRC-49	
1	PAOZZ	5306002258498	96906	MS90725-33	BOLT,MACHINE 5/16-18 X .88 PART OF KIT P/N 5596946..... UOC:A13,A14,H13,H14	8
* 2	PAOZZ	5310011191024	24617	2436162	WASHER,FLAT 5/16 PART OF KIT P/N 5596946..... UOC:A13,A14,H13,H14	48
3	PAOZZ	5306002264828	80204	B1821BH031C113N	BOLT,MACHINE 5/16-18 X 1.125 PART OF KIT P/N 5596946..... UOC:A13,A14,H13,H14	8
4	PAOZZ	5310008140673	96906	MS51943-33	NUT,SELF-LOCKING,HE 5/16-18 PART OF KIT P/N 5596946..... UOC:A13,A14,H13,H14	24
5	PAOZZ	2510012905675	34623	5597595	BRACE,RACK PART OF KIT P/N 5596946.. UOC:A13,A14,H13,H14	2
6	PAOZZ	5340012908473	34623	5596797	BRACKET,DOUBLE ANGL PART OF KIT P/N 5596946..... UOC:A13,A14,H13,H14	1
7	PAOZZ	5306002264829	80204	B1821BH031C125N	BOLT,MACHINE 5/16-18 X 1.25 PART OF KIT P/N 5596946..... UOC:A13,A14,H13,H14	2
8	PAOZZ	5306002258499	96906	MS90725-34	BOLT,MACHINE 5/16-18 X 1.00 PART OF KIT P/N 5596946..... UOC:A13,A14,H13,H14	6
9	PAOZZ	5310000614650	96906	MS51943-31	NUT,SELF-LOCKING,HE 1/4-20 PART OF KIT P/N 5596946..... UOC:A13,A14,H13,H14	4
10	PAOZZ	5310012510748	34623	5593691	WASHER,FLAT 1/4 PART OF KIT P/N 5596946..... UOC:A13,A14,H13,H14	8
11	PAOZZ	5340012918915	34623	5597357	BRACKET,MOUNTING PART OF KIT P/N 5596946..... UOC:A13,A14,H13,H14	2
12	PAOZZ	5305000712505	80204	MS90728-7	SCREW,CAP,HEXAGON H 1/4-20 X .88 PART OF KIT P/N 5596946..... UOC:A13,A14,H13,H14	4

END OF FIGURE

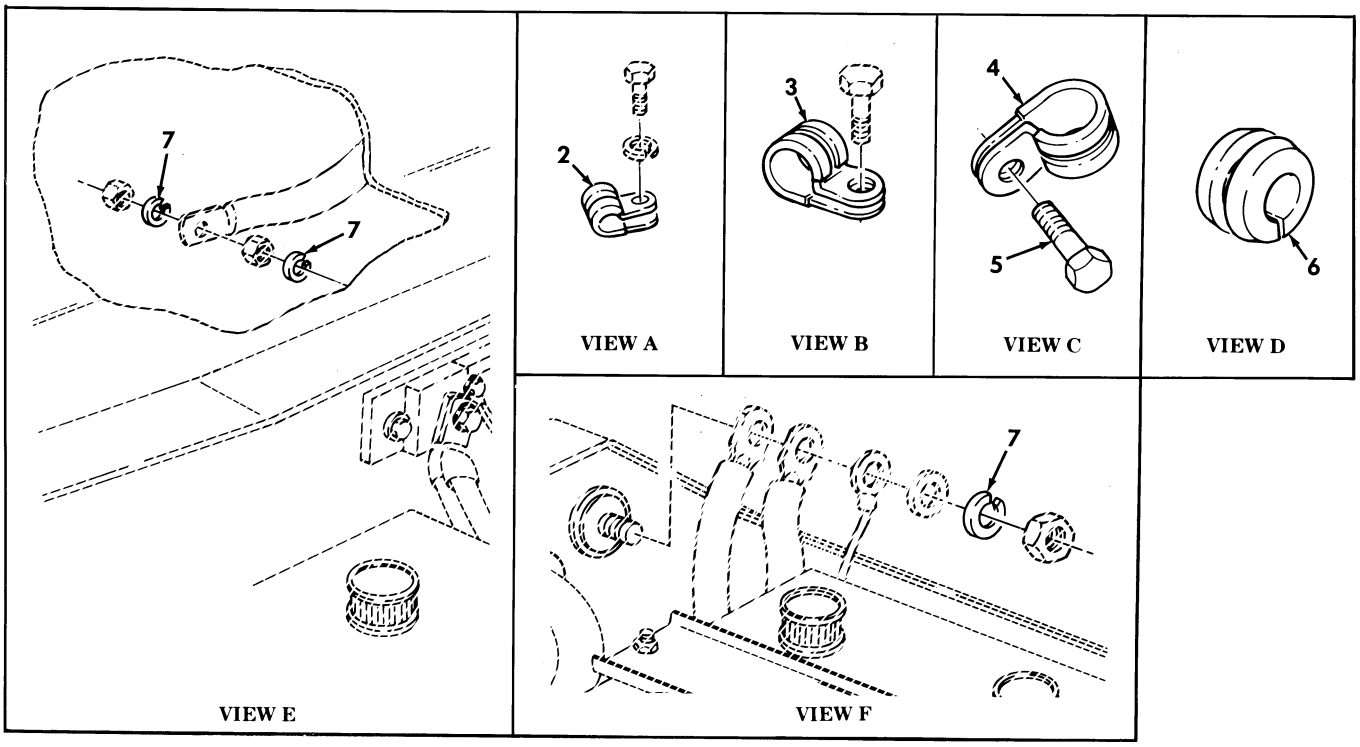

Figure 424. Communications Kit, Radio Cable, Main Power.

(1) ITEM NO	(2) SMR CODE	(3) NSN	(4) CAGEC	(5) PART NUMBER	(6) DESCRIPTION AND USABLE ON CODES(UOC)	(7) QTY
					GROUP 3307 SPECIAL PURPOSE KITS	
					FIG. 424 COMMUNICATIONS KIT,RADIO CABLE,MAIN POWER	
1	PAOZZ	6150012894761	34623	5597136-C	CABLE ASSEMBLY,POWE PART OF KIT P/N 5596946..... UOC:A13,A14,H13,H14	1
2	PAOZZ	5340000573043	96906	MS21333-112	CLAMP,LOOP PART OF KIT P/N 5596946.. UOC:A13,A14,H13,H14	2
3	PAOZZ	5340000502740	96906	MS21333-75	CLAMP,LOOP PART OF KIT P/N 5596946.. UOC:A13,A14,H13,H14	1
4	PAOZZ	5340000913790	96906	MS21333-72	CLAMP,LOOP PART OF KIT P/N 5596946.. UOC:A13,A14,H13,H14	1
5	PAOZZ	5305012596322	34623	12342499-1	SCREW,MACHINE #10-32 X 3/4 PART OF KIT P/N 5596946..... UOC:A13,A14,H13,H14	1
6	PAOZZ	5325002858363	96906	MS35489-45	GROMMET,NONMETALLIC PART OF KIT P/N 5596946..... UOC:A13,A14,H13,H14	1
7	PAOZZ	5310005845272	96906	MS35338-48	WASHER,LOCK 1/2 PART OF KIT P/N 5596946..... UOC:A13,A14,H13,H14	3

END OF FIGURE

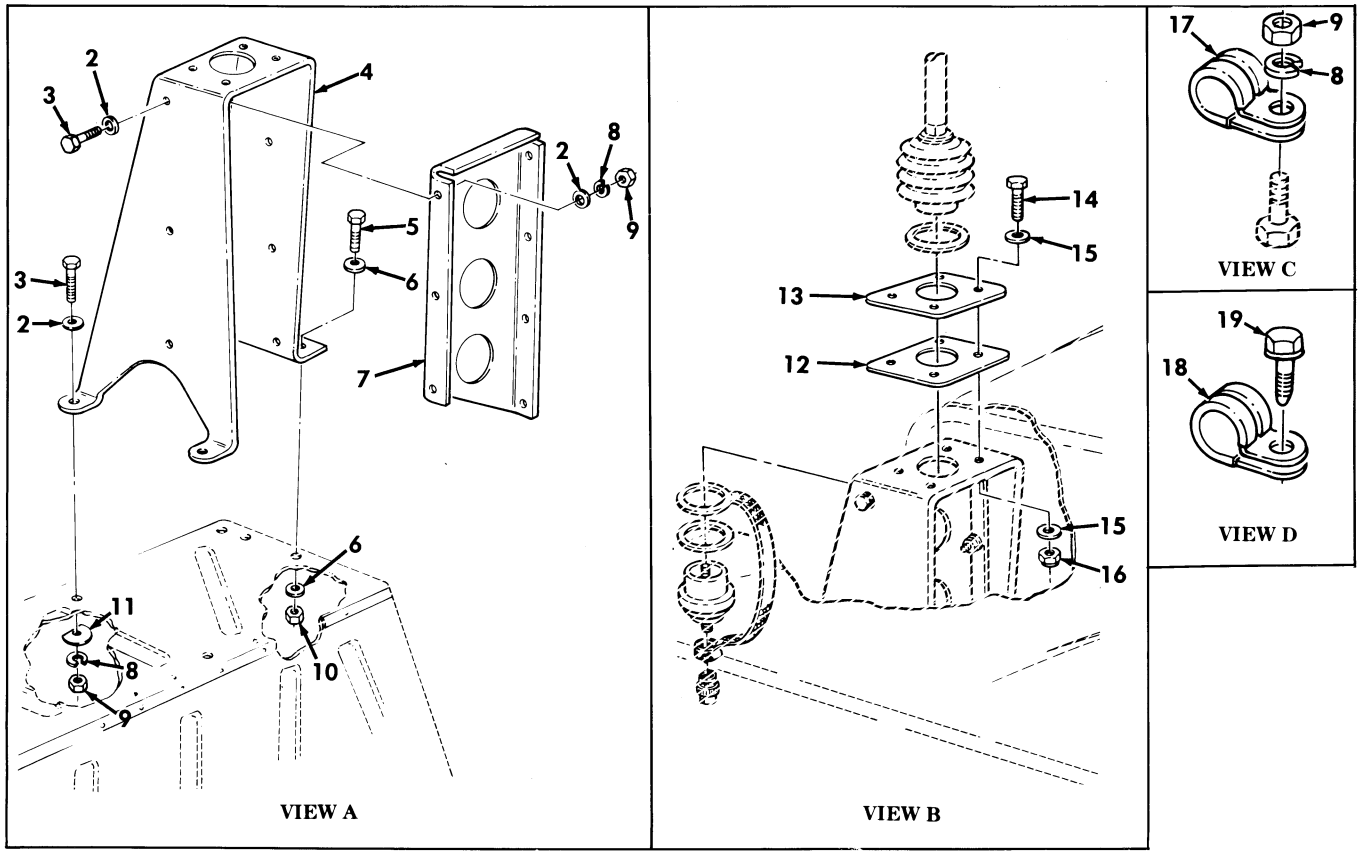

Figure 425. Communications Kit, Radio Cables, AN/VRC-47 and AN/VRC-48.

(1) ITEM NO	(2) SMR CODE	(3) NSN	(4) CAGEC	(5) PART NUMBER	(6) DESCRIPTION AND USABLE ON CODES(UOC)	(7) QTY
					GROUP 3307 SPECIAL PURPOSE KITS	
					FIG. 425 COMMUNICATIONS KIT,RADIO CABLES,AN/VRC-47 AND AN/VRC-48	
1	PAOZZ	5995012916377	34623	5597138	CABLE ASSEMBLY,SPEC PART OF KIT P/N 5596946..... UOC:A13,A14,H13,H14	1
2	PAOZZ	5310012510748	34623	5593691	WASHER,FLAT 1/4 PART OF KIT P/N 5596946..... UOC:A13,A14,H13,H14	16
3	PAOZZ	5305000680509	80204	B1821BH025C125N	SCREW,CAP,HEXAGON H 1/4-20 X 1.25 PART OF KIT P/N 5596946..... UOC:A13,A14,H13,H14	9
4	PAOZZ	5340012904887	34623	5596843	BRACKET,MOUNTING PART OF KIT P/N 5596946..... UOC:A13,A14,H13,H14	1
5	PAOZZ	5305000711788	80204	B1821BH044C125N	SCREW,CAP,HEXAGON H 7/16-14 X 1.25 PART OF KIT P/N 5596946..... UOC:A13,A14,H13,H14	2
6	PAOZZ	5310013034701	96906	MS51412-1	WASHER,FLAT 15/32 PART OF KIT P/N 5596946..... UOC:A13,A14,H13,H14	4
7	PAOZZ	5340012915186	34623	5597150	BRACKET,MOUNTING PART OF KIT P/N 5596946..... UOC:A13,A14,H13,H14	1
8	PAOZZ	5310005825965	96906	MS35338-44	WASHER,LOCK 1/4 PART OF KIT P/N 5596946..... UOC:A13,A14,H13,H14	12
9	PAOZZ	5310009050762	96906	MS51967-3	NUT,PLAIN,HEXAGON 1/4-20 PART OF KIT P/N 5596946..... UOC:A13,A14,H13,H14	12
10	PAOZZ	5310008960903	96906	MS51967-12	NUT,PLAIN,HEXAGON 7/16-14 PART OF KIT P/N 5596946..... UOC:A13,A14,H13,H14	2
11	PAOZZ	5310012087576	19207	12338095	WASHER,FLAT 1/4 PART OF KIT P/N 5596946..... UOC:A13,A14,H13,H14	2
12	PAOZZ	5330012899231	34623	5597371	GASKET PART OF KIT P/N 5596946..... UOC:A13,A14,H13,H14	1
13	PAOZZ	5985012533514	19207	12340637	ADAPTER,ANTENNA TO PART OF KIT P/N 5596946..... UOC:A13,A14,H13,H14	1
14	PAOZZ	5305005432419	80204	B1821BH038C113N	SCREW,CAP,HEXAGON H 3/8-16 X 1.125 PART OF KIT P/N 5596946..... UOC:A13,A14,H13,H14	4
15	PAOZZ	5310014124013	24617	2436163	WASHER,FLAT 3/8 PART OF KIT P/N 5596946..... UOC:A13,A14,H13,H14	8
16	PAOZZ	5310009359021	96906	MS51943-35	NUT,SELF-LOCKING,HE 3/8-16 PART OF KIT P/N 5596946..... UOC:A13,A14,H13,H14	4
17	PAOZZ	5340008546729	96906	MS21333-103	CLAMP,LOOP PART OF KIT P/N 5596946..	3

(1) ITEM NO	(2) SMR CODE	(3) NSN	(4) CAGEC	(5) PART NUMBER	(6) DESCRIPTION AND USABLE ON CODES(UOC)	(7) QTY
					UOC:A13,A14,H13,H14	
18	PAOZZ	5340000797837	96906	MS21333-67	CLAMP,LOOP PART OF KIT P/N 5596946..	3
					UOC:A13,A14,H13,H14	
19	PAOZZ	5305012596322	34623	5593913	SCREW,MACHINE #10-32 X 3/4 PART OF	3
					KIT P/N 5596946.....	
					UOC:A13,A14,H13,H14	

END OF FIGURE

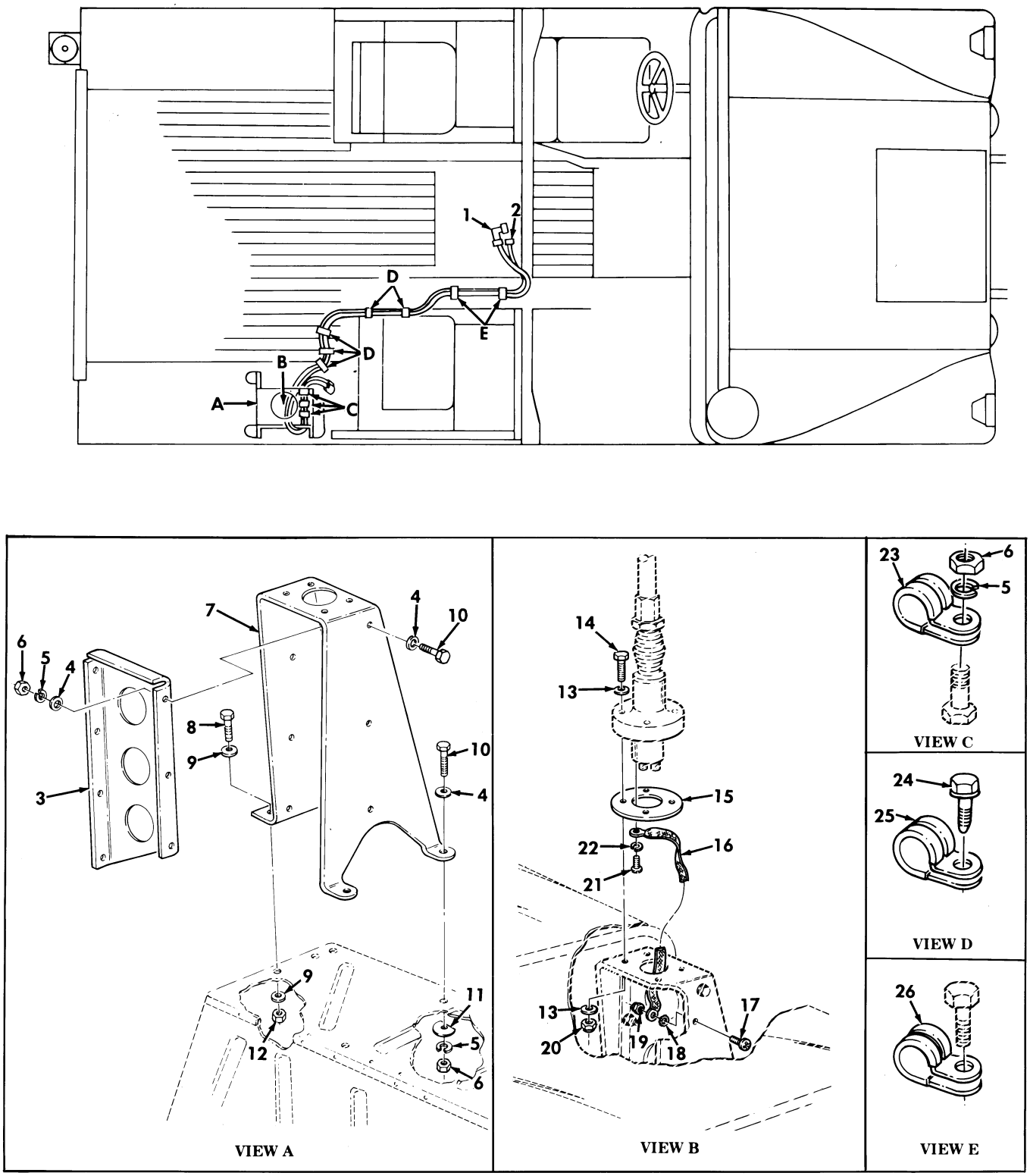

Figure 426. Communications Kit, Radio Cables, AN/VRC-46, (2) AN/VRC-46, (3) AN/VRC-46, AN/VRC-47, AN/VRC-48, AND AN/VRC-49.

(1) ITEM NO	(2) SMR CODE	(3) NSN	(4) CAGEC	(5) PART NUMBER	(6) DESCRIPTION AND USABLE ON CODES(UOC)	(7) QTY
					GROUP 3307 SPECIAL PURPOSE KITS	
					FIG. 426 COMMUNICATIONS KIT,RADIO CABLES,AN/VRC-46,(2) AN/VRC-46,(3) AN/VRC-46,AN/VRC-47,AN/VRC-48,AND AN/VRC-49	
1	PAOZZ	5995012901719	34623	5597137	CABLE ASSEMBLY,RADI PART OF KIT P/N 5596946..... UOC:A13,A14,H13,H14	1
2	PAOZZ	5995012916377	34623	5597138	CABLE ASSEMBLY,SPEC PART OF KIT P/N 5596946..... UOC:A13,A14,H13,H14	1
3	PAOZZ	5340012906343	34623	5597151	BRACKET,MOUNTING PART OF KIT P/N 5596946..... UOC:A13,A14,H13,H14	1
4	PAOZZ	5310012510748	34623	5593691	WASHER,FLAT 1/4 PART OF KIT P/N 5596946..... UOC:A13,A14,H13,H14	16
5	PAOZZ	5310005825965	96906	MS35338-44	WASHER,LOCK 1/4 PART OF KIT P/N 5596946..... UOC:A13,A14,H13,H14	12
6	PAOZZ	5310009050762	96906	MS51967-3	NUT,PLAIN,HEXAGON 1/4-20 PART OF KIT P/N 5596946..... UOC:A13,A14,H13,H14	12
7	PAOZZ	5340012904888	34623	5597155	BRACKET,MOUNTING PART OF KIT P/N 5596946..... UOC:A13,A14,H13,H14	1
8	PAOZZ	5305000711788	80204	B1821BH044C125N	SCREW,CAP,HEXAGON H 7/16-14 X 1.25 PART OF KIT P/N 5596946..... UOC:A13,A14,H13,H14	2
9	PAOZZ	5310013034701	96906	MS51412-1	WASHER,FLAT 15/32 PART OF KIT P/N 5596946..... UOC:A13,A14,H13,H14	4
10	PAOZZ	5305000680509	80204	B1821BH025C125N	SCREW,CAP,HEXAGON H 1/4-20 X 1.25 PART OF KIT P/N 5596946..... UOC:A13,A14,H13,H14	9
11	PAOZZ	5310012087576	19207	12338095	WASHER,FLAT 1/4 PART OF KIT P/N 5596946..... UOC:A13,A14,H13,H14	2
12	PAOZZ	5310008960903	96906	MS51967-12	NUT,PLAIN,HEXAGON 7/16-14 PART OF KIT P/N 5596946..... UOC:A13,A14,H13,H14	2
13	PAOZZ	5310014124013	24617	2436163	WASHER,FLAT 3/8 PART OF KIT P/N 5596946..... UOC:A13,A14,H13,H14	8
14	PAOZZ	5305012608881	34623	5593315	SCREW,CAP,HEXAGON H 3/8-16 X 2.25 PART OF KIT P/N 5596946..... UOC:A13,A14,H13,H14	4
15	PAOZZ	5330012708315	19207	12341876	GASKET PART OF KIT P/N 5596946..... UOC:A13,A14,H13,H14	1
16	PAOZZ	6150012078120	34623	12338099-1	LEAD,ELECTRICAL PART OF KIT P/N 5596946.....	1

(1) ITEM NO	(2) SMR CODE	(3) NSN	(4) CAGEC	(5) PART NUMBER	(6) DESCRIPTION AND USABLE ON CODES(UOC)	(7) QTY
					UOC:A13,A14,H13,H14	
17	PAOZZ	5305000593660	96906	MS51958-64	SCREW,MACHINE #10-32 X .625 PART OF KIT P/N 5596946.....	1
					UOC:A13,A14,H13,H14	
18	PAOZZ	5310000809786	96906	MS45904-60	WASHER,LOCK #10 PART OF KIT P/N 5596946.....	1
					UOC:A13,A14,H13,H14	
19	PAOZZ	5310012510726	34623	5593053	NUT,SELF-LOCKING,HE #10-32 PART OF KIT P/N 5596946.....	1
					UOC:A13,A14,H13,H14	
20	PAOZZ	5310009359021	96906	MS51943-35	NUT,SELF-LOCKING,HE 3/8-16 PART OF KIT P/N 5596946.....	4
					UOC:A13,A14,H13,H14	
21	PAOZZ	5305000593659	96906	MS51958-63	SCREW,MACHINE #10-32 X .50 PART OF KIT P/N 5596946.....	1
					UOC:A13,A14,H13,H14	
22	PAOZZ	5310000453296	96906	MS35338-43	WASHER,LOCK #10 PART OF KIT P/N 5596946.....	1
					UOC:A13,A14,H13,H14	
23	PAOZZ	5340008546729	96906	MS21333-103	CLAMP,LOOP PART OF KIT P/N 5596946..	3
					UOC:A13,A14,H13,H14	
24	PAOZZ	5305012596322	34623	12342499-1	SCREW,MACHINE #10-32 X 3/4 PART OF KIT P/N 5596946.....	5
					UOC:A13,A14,H13,H14	
25	PAOZZ	5340000913790	96906	MS21333-72	CLAMP,LOOP PART OF KIT P/N 5596946..	5
					UOC:A13,A14,H13,H14	
26	PAOZZ	5340000573043	96906	MS21333-112	CLAMP,LOOP PART OF KIT P/N 5596946..	2
					UOC:A13,A14,H13,H14	

END OF FIGURE

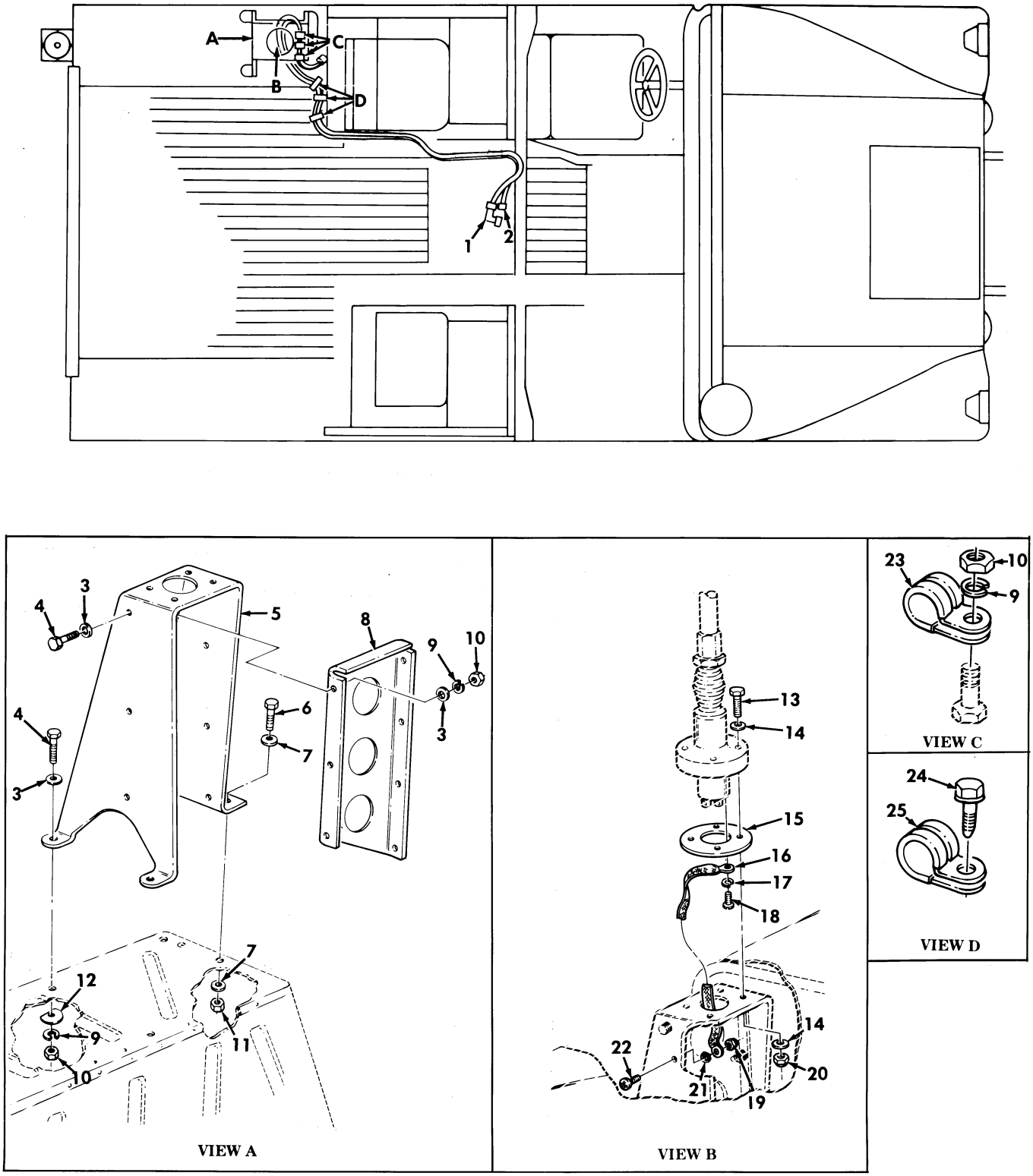

Figure 427. Communications Kit, Radio Cables, (2) AN/VRC-46 , (3) AN/VRC-47, and AN/VRC-49.

(1) ITEM NO	(2) SMR CODE	(3) NSN	(4) CAGEC	(5) PART NUMBER	(6) DESCRIPTION AND USABLE ON CODES(UOC)	(7) QTY
					GROUP 3307 SPECIAL PURPOSE KITS	
					FIG. 427 COMMUNICATIONS KIT,RADIO CABLES,(2) AN/VRC-46,(3) AN/VRC-47, AND AN/VRC-49	
1	PAOZZ	5995012901719	34623	5597137	CABLE ASSEMBLY,RADI PART OF KIT P/N 5596946..... UOC:A13,A14,H13,H14	1
2	PAOZZ	5995012916377	34623	5597138	CABLE ASSEMBLY,SPEC PART OF KIT P/N 5596946..... UOC:A13,A14,H13,H14	1
3	PAOZZ	5310012510748	34623	5593691	WASHER,FLAT 1/4 PART OF KIT P/N 5596946..... UOC:A13,A14,H13,H14	16
4	PAOZZ	5305000680509	80204	B1821BH025C125N	SCREW,CAP,HEXAGON H 1/4-20 X 1.25 PART OF KIT P/N 5596946..... UOC:A13,A14,H13,H14	9
5	PAOZZ	5340012904887	34623	5596843	BRACKET,MOUNTING PART OF KIT P/N 5596946..... UOC:A13,A14,H13,H14	1
6	PAOZZ	5305000711788	80204	B1821BH044C125N	SCREW,CAP,HEXAGON H 7/16-14 X 1.25 PART OF KIT P/N 5596946..... UOC:A13,A14,H13,H14	2
7	PAOZZ	5310013034701	96906	MS51412-1	WASHER,FLAT 15/32 PART OF KIT P/N 5596946..... UOC:A13,A14,H13,H14	4
8	PAOZZ	5340012915186	34623	5597150	BRACKET,MOUNTING PART OF KIT P/N 5596946..... UOC:A13,A14,H13,H14	1
9	PAOZZ	5310005825965	96906	MS35338-44	WASHER,LOCK 1/4 PART OF KIT P/N 5596946..... UOC:A13,A14,H13,H14	12
10	PAOZZ	5310009050762	96906	MS51967-3	NUT,PLAIN,HEXAGON 1/4-20 PART OF KIT P/N 5596946..... UOC:A13,A14,H13,H14	12
11	PAOZZ	5310008960903	96906	MS51967-12	NUT,PLAIN,HEXAGON 7/16-14 PART OF KIT P/N 5596946..... UOC:A13,A14,H13,H14	2
12	PAOZZ	5310012087576	19207	12338095	WASHER,FLAT 1/4 PART OF KIT P/N 5596946..... UOC:A13,A14,H13,H14	2
13	PAOZZ	5305012608881	34623	5593315	SCREW,CAP,HEXAGON H 3/8-16 X 2.25 PART OF KIT P/N 5596946..... UOC:A13,A14,H13,H14	4
14	PAOZZ	5310014124013	24617	2436163	WASHER,FLAT 3/8 PART OF KIT P/N 5596946..... UOC:A13,A14,H13,H14	8
15	PAOZZ	5330012708315	19207	12341876	GASKET PART OF KIT P/N 5596946..... UOC:A13,A14,H13,H14	1
16	PAOZZ	6150012078120	34623	12338099-1	LEAD,ELECTRICAL PART OF KIT P/N 5596946..... UOC:A13,A14,H13,H14	1

(1) ITEM NO	(2) SMR CODE	(3) NSN	(4) CAGEC	(5) PART NUMBER	(6) DESCRIPTION AND USABLE ON CODES(UOC)	(7) QTY
17	PAOZZ	5310000453296	96906	MS35338-43	WASHER,LOCK #10 PART OF KIT P/N 5596946..... UOC:A13,A14,H13,H14	1
18	PAOZZ	5305000593659	96906	MS51958-63	SCREW,MACHINE #10-32 X .50 PART OF KIT P/N 5596946..... UOC:A13,A14,H13,H14	1
19	PAOZZ	5310012510726	34623	5593053	NUT,SELF-LOCKING,HE #10-32 PART OF KIT P/N 5596946..... UOC:A13,A14,H13,H14	4
20	PAOZZ	5310009359021	96906	MS51943-35	NUT,SELF-LOCKING,HE 3/8-16 PART OF KIT P/N 5596946..... UOC:A13,A14,H13,H14	1
21	PAOZZ	5310000809786	96906	MS45904-60	WASHER,LOCK #10 PART OF KIT P/N 5596946..... UOC:A13,A14,H13,H14	1
22	PAOZZ	5305000593660	96906	MS51958-64	SCREW,MACHINE #10-32 X .625 PART OF KIT P/N 5596946..... UOC:A13,A14,H13,H14	1
23	PAOZZ	5340008546729	96906	MS21333-103	CLAMP,LOOP PART OF KIT P/N 5596946.. UOC:A13,A14,H13,H14	3
24	PAOZZ	5305012596322	34623	12342499-1	SCREW,MACHINE #10-32 X 3/4 PART OF KIT P/N 5596946..... UOC:A13,A14,H13,H14	3
25	PAOZZ	5340000913790	96906	MS21333-72	CLAMP,LOOP PART OF KIT P/N 5596946.. UOC:A13,A14,H13,H14	3

END OF FIGURE

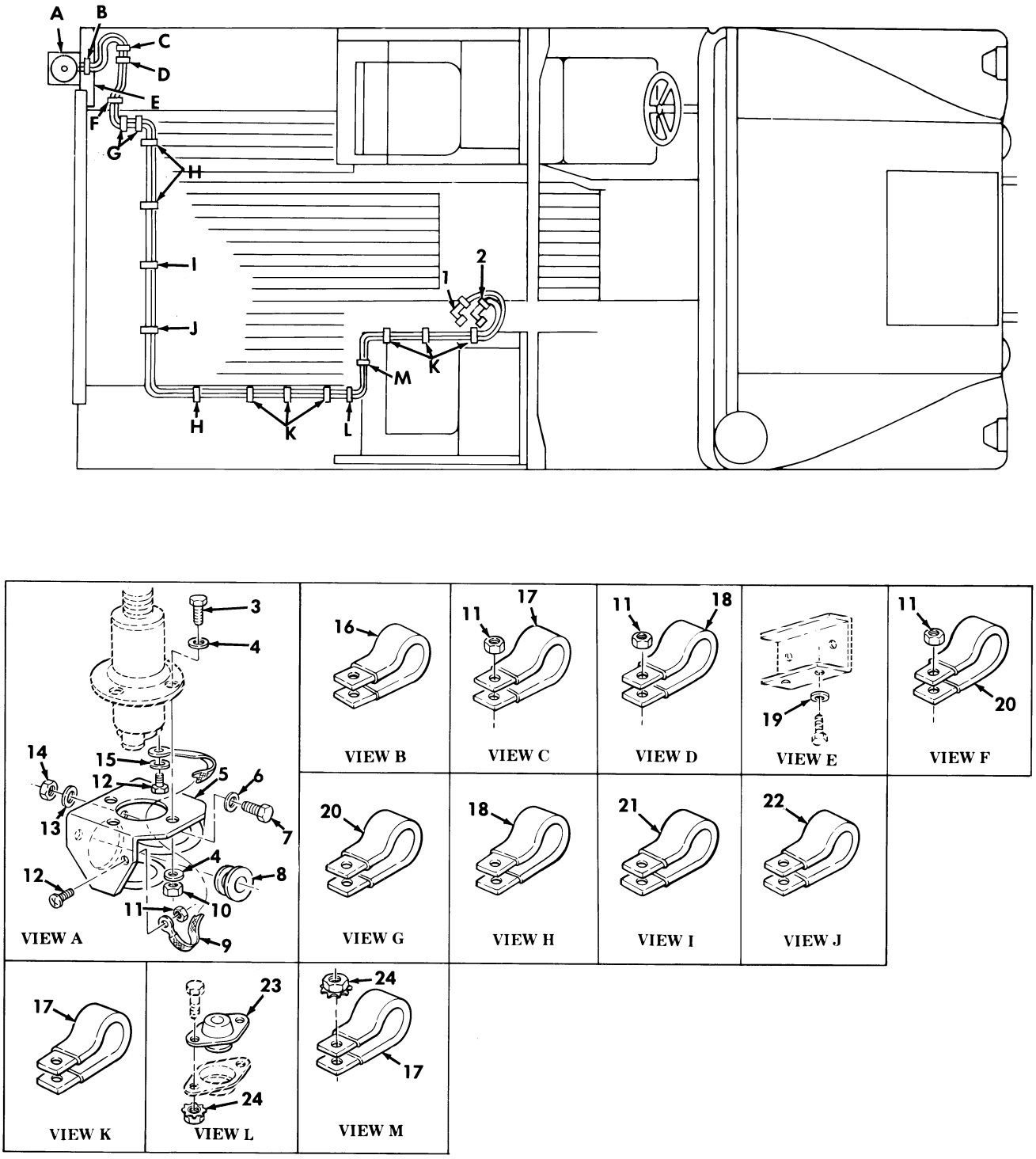

Figure 428. Communications Kit, Radio Cables, (3) AN/VRC-46.

(1) ITEM NO	(2) SMR CODE	(3) NSN	(4) CAGEC	(5) PART NUMBER	(6) DESCRIPTION AND USABLE ON CODES(UOC)	(7) QTY
					GROUP 3307 SPECIAL PURPOSE KITS	
					FIG. 428 COMMUNICATIONS KIT,RADIO CABLES,(3) AN/VRC-46	
1	PAOZZ	5995012916384	34623	5597496	CABLE ASSEMBLY,RADI PART OF KIT P/N 5596946..... UOC:A13,A14,H13,H14	1
2	PAOZZ	5995012516785	19201	12338089-4	CABLE ASSEMBLY,SPEC PART OF KIT P/N 5596946..... UOC:A13,A14,H13,H14	1
3	PAOZZ	5305007829489	80204	B1821BH038C200N	SCREW,CAP,HEXAGON H 3/8-16 X 2.00 PART OF KIT P/N 5596946..... UOC:A13,A14,H13,H14	4
4	PAOZZ	5310014124013	24617	2436163	WASHER,FLAT 3/8 PART OF KIT P/N 5596946..... UOC:A13,A14,H13,H14	8
5	PAOZZ	5985012159404	80063	A3046166	SUPPORT,ANTENNA LEFT REAR PART OF KIT P/N 5596946..... UOC:A13,A14,H13,H14	1
* 6	PAOZZ	5310011191024	24617	2436162	WASHER,FLAT 5/16 PART OF KIT P/N 5596946..... UOC:A13,A14,H13,H14	3
7	PAOZZ	5306002258499	96906	MS90725-34	BOLT,MACHINE 5/16-18 X 1.00 PART OF KIT P/N 5596946..... UOC:A13,A14,H13,H14	3
8	PAOZZ	5325007541155	96906	MS35489-50	GROMMET,NONMETALLIC PART OF KIT P/N 5596946..... UOC:A13,A14,H13,H14	1
9	PAOZZ	6150012078120	34623	12338099-1	LEAD,ELECTRICAL PART OF KIT P/N 5596946..... UOC:A13,A14,H13,H14	1
10	PAOZZ	5310009359021	96906	MS51943-35	NUT,SELF-LOCKING,HE 3/8-16 PART OF KIT P/N 5596946..... UOC:A13,A14,H13,H14	4
11	PAOZZ	5310012510726	34623	5593053	NUT,SELF-LOCKING,HE #10-32 PART OF KIT P/N 5596946..... UOC:A13,A14,H13,H14	4
12	PAOZZ	5305000593659	96906	MS51958-63	SCREW,MACHINE #10-32 X .50 PART OF KIT P/N 5596946..... UOC:A13,A14,H13,H14	2
13	PAOZZ	5310012087576	19207	12338095	WASHER,FLAT PART OF KIT P/N 5596946. UOC:A13,A14,H13,H14	3
14	PAOZZ	5310008140673	96906	MS51943-33	NUT,SELF-LOCKING,HE 5/16-18 PART OF KIT P/N 5596946..... UOC:A13,A14,H13,H14	3
15	PAOZZ	5310000453296	96906	MS35338-43	WASHER,LOCK #10 PART OF KIT P/N 5596946..... UOC:A13,A14,H13,H14	1
16	PAOZZ	5340008546730	96906	MS21333-124	CLAMP,LOOP PART OF KIT P/N 5596946.. UOC:A13,A14,H13,H14	1
17	PAOZZ	5340000572906	96906	MS21333-73	CLAMP,LOOP PART OF KIT P/N 5596946.. UOC:A13,A14,H13,H14	8

(1) ITEM NO	(2) SMR CODE	(3) NSN	(4) CAGEC	(5) PART NUMBER	(6) DESCRIPTION AND USABLE ON CODES(UOC)	(7) QTY
18	PAOZZ	5340009226300	96906	MS21333-77	CLAMP,LOOP PART OF KIT P/N 5596946.. UOC:A13,A14,H13,H14	4
19	PAOZZ	5310005825965	96906	MS35338-44	WASHER,LOCK 1/4 PART OF KIT P/N 5596946..... UOC:A13,A14,H13,H14	2
20	PAOZZ	5340007247038	96906	MS21333-76	CLAMP,LOOP PART OF KIT P/N 5596946.. UOC:A13,A14,H13,H14	3
21	PAOZZ	5340009588457	96906	MS21333-78	CLAMP,LOOP PART OF KIT P/N 5596946.. UOC:A13,A14,H13,H14	1
22	PAOZZ	5340000502740	96906	MS21333-75	CLAMP,LOOP PART OF KIT P/N 5596946.. UOC:A13,A14,H13,H14	1
23	PAOZZ	5325012555063	34623	5590155	GROMMET,NONMETALLIC PART OF KIT P/N 5596946..... UOC:A13,A14,H13,H14	1
* 24	PAOZZ	5310011520598	24617	271172	NUT,SEL-LOCKING,AS 1/4-20 PART OF KIT P/N 5596946..... UOC:A13,A14,H13,H14	2
KIT	PDOZZ	5820012879612	34623	5596946	INSTALLATION KIT,EL..... UOC:A13,A14,H13,H14	1
					ADAPTER,ANTENNA TO (1) 425-13	
					BOLT,MACHINE (14) 417-4	
					BOLT,MACHINE (4) 417-7	
					BOLT,MACHINE (4) 418-4	
					BOLT,MACHINE (2) 418-7	
					BOLT,MACHINE (3) 418-6	
					BOLT,MACHINE (8) 419-5	
					BOLT,MACHINE (6) 419-7	
					BOLT,MACHINE (4) 419-8	
					BOLT,MACHINE (13) 420-1	
					BOLT,MACHINE (8) 420-3	
					BOLT,MACHINE (6) 420-5	
					BOLT,MACHINE (8) 421-1	
					BOLT,MACHINE (2) 421-7	
					BOLT,MACHINE (7) 421-8	
					BOLT,MACHINE (8) 422-1	
					BOLT,MACHINE (15) 422-3	
					BOLT,MACHINE (2) 422-9	
					BOLT,MACHINE (8) 423-1	
					BOLT,MACHINE (8) 423-3	
					BOLT,MACHINE (2) 423-7	
					BOLT,MACHINE (6) 423-8	
					BOLT,MACHINE (3) 428-7	
					BRACE,RACK (2) 423-5	
					BRACKET,ANGLE (1) 417-12	
					BRACKET,ANGLE (1) 417-14	
					BRACKET,ANGLE (1) 417-14	
					BRACKET,ANGLE (1) 421-10	
					BRACKET,ANGLE (2) 422-10	
					BRACKET,DOUBLE ANGL(4) 417-10	
					BRACKET,DOUBLE ANGL(1) 423-6	
					BRACKET,MOUNTING (2) 417-6	
					BRACKET,MOUNTING (2) 417-17	
					BRACKET,MOUNTING (1) 418-3	
					BRACKET,MOUNTING (2) 419-3	

(1) ITEM NO	(2) SMR CODE	(3) NSN	(4) CAGEC	(5) PART NUMBER	(6) DESCRIPTION AND USABLE ON CODES(UOC)	(7) QTY
					BRACKET,MOUNTING (2) 420-8	
					BRACKET,MOUNTING (1) 421-5	
					BRACKET,MOUNTING (1) 422-7	
					BRACKET,MOUNTING (2) 423-11	
					BRACKET,MOUNTING (1) 425-4	
					BRACKET,MOUNTING (1) 425-7	
					BRACKET,MOUNTING (1) 426-3	
					BRACKET,MOUNTING (1) 426-7	
					BRACKET,MOUNTING (1) 427-5	
					BRACKET,MOUNTING (1) 427-8	
					CABLE ASSEMBLY,POWE(1) 424-1	
					CABLE ASSEMBLY,RADI(1) 426-1	
					CABLE ASSEMBLY,RADI(1) 427-1	
					CABLE ASSEMBLY,RADI(1) 428-1	
					CABLE ASSEMBLY,SPEC(1) 425-1	
					CABLE ASSEMBLY,SPEC(1) 426-2	
					CABLE ASSEMBLY,SPEC(1) 427-2	
					CABLE ASSEMBLY,SPEC(1) 428-2	
					CLAMP,LOOP (2) 424-2	
					CLAMP,LOOP (1) 424-3	
					CLAMP,LOOP (1) 424-4	
					CLAMP,LOOP (3) 425-17	
					CLAMP,LOOP (3) 425-18	
					CLAMP,LOOP (3) 426-23	
					CLAMP,LOOP (5) 426-25	
					CLAMP,LOOP (2) 426-26	
					CLAMP,LOOP (3) 427-23	
					CLAMP,LOOP (3) 427-25	
					CLAMP,LOOP (1) 428-16	
					CLAMP,LOOP (8) 428-17	
					CLAMP,LOOP (4) 428-18	
					CLAMP,LOOP (3) 428-20	
					CLAMP,LOOP (1) 428-21	
					CLAMP,LOOP (1) 428-22	
					GASKET (1) 425-12	
					GASKET (1) 427-15	
					GASKET (1) 426-15	
					GROMMET,NONMETALLIC(1) 424-6	
					GROMMET,NONMETALLIC(1) 428-8	
					GROMMET,NONMETALLIC(1) 428-23	
					LEAD,ELECTRICAL (1) 426-16	
					LEAD,ELECTRICAL (1) 427-16	
					LEAD,ELECTRICAL (1) 428-9	
					NUT (2) 428-24	
					NUT,PLAIN,BLIND RIV(4) 417-8	
					NUT,PLAIN,HEXAGON (12) 425-9	
					NUT,PLAIN,HEXAGON (2) 425-10	
					NUT,PLAIN,HEXAGON (12) 426-6	
					NUT,PLAIN,HEXAGON (2) 426-12	
					NUT,PLAIN,HEXAGON (12) 427-10	
					NUT,PLAIN,HEXAGON (2) 427-11	
					NUT,SELF-LOCKING,HE(14) 417-11	
					NUT,SELF-LOCKING,HE(4) 417-18	

(1) ITEM NO	(2) SMR CODE	(3) NSN	(4) CAGEC	(5) PART NUMBER	(6) DESCRIPTION AND USABLE ON CODES(UOC)	(7) QTY
					NUT,SELF-LOCKING,HE(9) 418-8	
					NUT,SELF-LOCKING,HE(2) 418-9	
					NUT,SELF-LOCKING,HE(4) 419-4	
					NUT,SELF-LOCKING,HE(18) 419-9	
					NUT,SELF-LOCKING,HE(27) 420-4	
					NUT,SELF-LOCKING,HE(4) 420-6	
					NUT,SELF-LOCKING,HE(4) 421-6	
					NUT,SELF-LOCKING,HE(17) 421-9	
					NUT,SELF-LOCKING,HE(25) 422-4	
					NUT,SELF-LOCKING,HE(6) 422-8	
					NUT,SELF-LOCKING,HE(24) 423-4	
					NUT,SELF-LOCKING,HE(4) 423-9	
					NUT,SELF-LOCKING,HE(4) 425-16	
					NUT,SELF-LOCKING,HE(1) 426-19	
					NUT,SELF-LOCKING,HE(4) 426-20	
					NUT,SELF-LOCKING,HE(4) 427-19	
					NUT,SELF-LOCKING,HE(1) 427-20	
					NUT,SELF-LOCKING,HE(4) 428-10	
					NUT,SELF-LOCKING,HE(4) 428-11	
					NUT,SELF-LOCKING,HE(3) 428-14	
					PROTECTOR,EDGE (1) 417-13	
					RIVET,BLIND (8) 417-9	
					SCREW,CAP,HEXAGON H(4) 417-3	
					SCREW,CAP,HEXAGON H(2) 417-16	
					SCREW,CAP,HEXAGON H(2) 418-1	
					SCREW,CAP,HEXAGON H(4) 419-1	
					SCREW,CAP,HEXAGON H(4) 420-9	
					SCREW,CAP,HEXAGON H(2) 421-3	
					SCREW,CAP,HEXAGON H(2) 421-11	
					SCREW,CAP,HEXAGON H(2) 422-5	
					SCREW,CAP,HEXAGON H(4) 422-11	
					SCREW,CAP,HEXAGON H(4) 423-12	
					SCREW,CAP,HEXAGON H(9) 425-3	
					SCREW,CAP,HEXAGON H(2) 425-5	
					SCREW,CAP,HEXAGON H(4) 425-14	
					SCREW,CAP,HEXAGON H(9) 426-10	
					SCREW,CAP,HEXAGON H(4) 426-14	
					SCREW,CAP,HEXAGON H(9) 427-4	
					SCREW,CAP,HEXAGON H(2) 427-6	
					SCREW,CAP,HEXAGON H(4) 427-13	
					SCREW,CAP,HEXAGON H(4) 428-3	
					SCREW,CAP,HEXAGON H(2) 426-8	
					SCREW,MACHINE (1) 424-5	
					SCREW,MACHINE (3) 425-19	
					SCREW,MACHINE (1) 426-17	
					SCREW,MACHINE (1) 426-21	
					SCREW,MACHINE (5) 426-24	
					SCREW,MACHINE (1) 427-18	
					SCREW,MACHINE (1) 427-22	
					SCREW,MACHINE (3) 427-24	
					SCREW,MACHINE (2) 428-12	
					SHELF,ELECTRICAL EQ(2) 417-1	
					SUPPORT,ANTENNA (1) 428-5	

(1) ITEM NO	(2) SMR CODE	(3) NSN	(4) CAGEC	(5) PART NUMBER	(6) DESCRIPTION AND USABLE ON CODES(UOC)	(7) QTY
					WASHER,FLAT (8) 417-2	
					WASHER,FLAT (32) 417-5	
					WASHER,FLAT (2) 417-15	
					WASHER,FLAT (4) 418-2	
					WASHER,FLAT (18) 418-5	
					WASHER,FLAT (8) 419-2	
					WASHER,FLAT (36) 419-6	
					WASHER,FLAT (54) 420-2	
					WASHER,FLAT (8) 420-7	
					WASHER,FLAT (34) 421-2	
					WASHER,FLAT (8) 421-4	
					WASHER,FLAT (50) 422-2	
					WASHER,FLAT (12) 422-6	
					WASHER,FLAT (48) 423-2	
					WASHER,FLAT (8) 423-10	
					WASHER,FLAT (16) 425-2	
					WASHER,FLAT (4) 425-6	
					WASHER,FLAT (2) 425-11	
					WASHER,FLAT (8) 425-15	
					WASHER,FLAT (16) 426-4	
					WASHER,FLAT (4) 426-9	
					WASHER,FLAT (2) 426-11	
					WASHER,FLAT (8) 426-13	
					WASHER,FLAT (16) 427-3	
					WASHER,FLAT (4) 427-7	
					WASHER,FLAT (2) 427-12	
					WASHER,FLAT (8) 427-14	
					WASHER,FLAT (8) 428-4	
					WASHER,FLAT (3) 428-6	
					WASHER,FLAT (3) 428-13	
					WASHER,LOCK (3) 424-7	
					WASHER,LOCK (12) 425-8	
					WASHER,LOCK (12) 426-5	
					WASHER,LOCK (1) 426-18	
					WASHER,LOCK (1) 426-22	
					WASHER,LOCK (12) 427-9	
					WASHER,LOCK (1) 427-17	
					WASHER,LOCK (1) 427-21	
					WASHER,LOCK (1) 428-15	
					WASHER,LOCK (2) 428-19	

END OF FIGURE

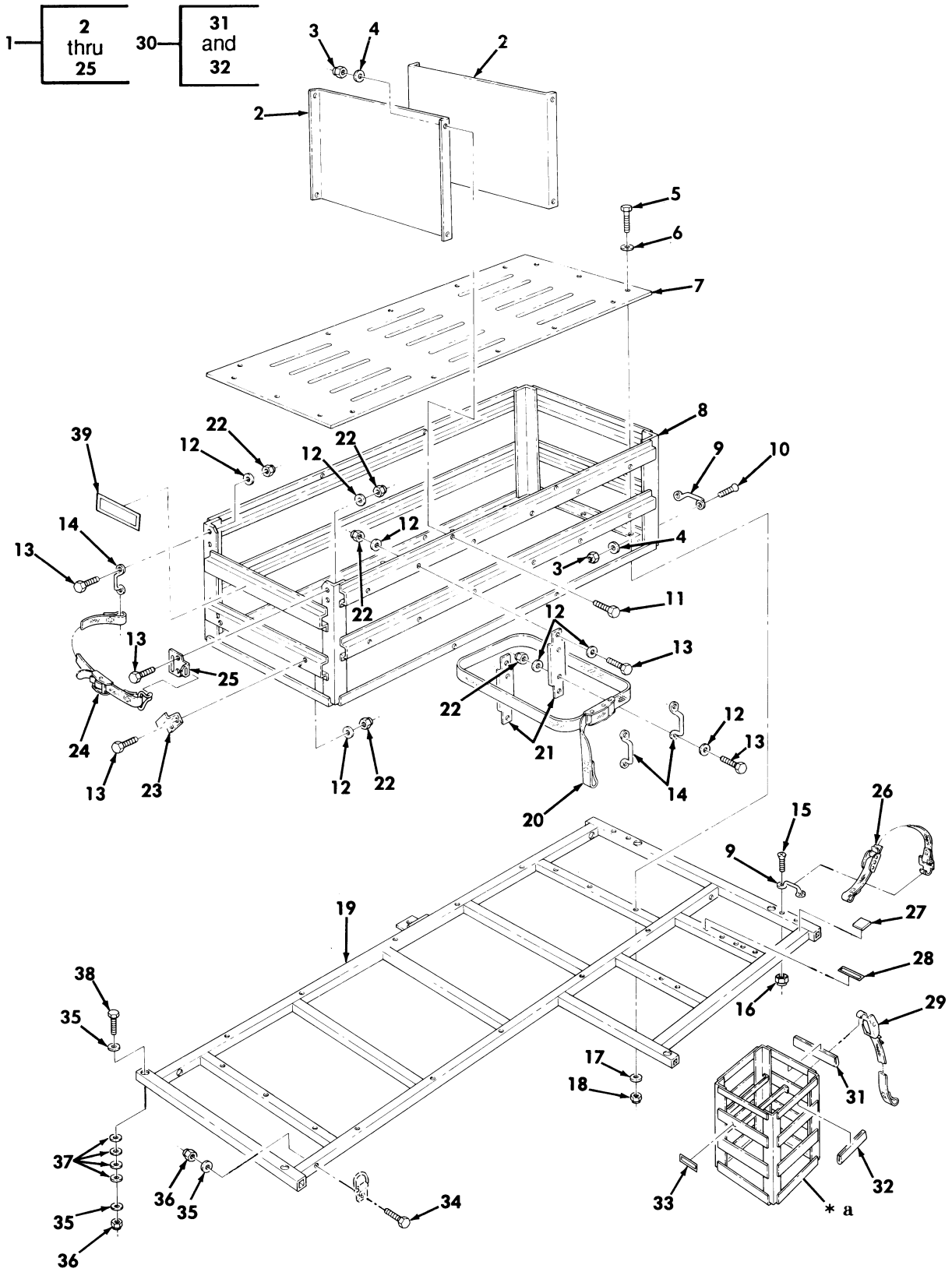

* a PART OF ITEM 30

Figure 429. 81 MM Mortar Kit, Container Assembly, and Stowage Rack.

(1) ITEM NO	(2) SMR CODE	(3) NSN	(4) CAGEC	(5) PART NUMBER	(6) DESCRIPTION AND USABLE ON CODES(UOC)	(7) QTY
					GROUP 3307 SPECIAL PURPOSE KITS	
					FIG. 429 81 MM MORTAR KIT,CONTAINER ASSEMBLY,AND STOWAGE RACK	
1	PFOOO	2540012507589	19207	12340422	BOX,AMMUNITION STOW PART OF KIT P/N 12338103..... UOC:AVY,A13,A14,BVY,HVY,H13,H14,NNN	1
2	PFOZZ	5340012893243	34623	5594249	.BRACKET,MOUNTING..... UOC:AVY,A13,A14,BVY,HVY,H13,H14,NNN	2
3	PAOZZ	5310012033217	34623	5584710	.NUT,SELF-LOCKING,HE #10-24..... UOC:AVY,A13,A14,BVY,HVY,H13,H14,NNN	22
4	PAOZZ	5310000145850	96906	MS27183-42	.WASHER,FLAT #10..... UOC:AVY,A13,A14,BVY,HVY,H13,H14,NNN	22
5	PAOZZ	5306002264835	80204	B1821BH031C250N	.BOLT,MACHINE 5/16-18 X 2.50..... UOC:AVY,A13,A14,BVY,HVY,H13,H14,NNN	16
6	PAOZZ	5310000814219	96906	MS27183-12	.WASHER,FLAT 5/16..... UOC:AVY,A13,A14,BVY,HVY,H13,H14,NNN	16
7	PFOZZ	9515012491591	34623	5594252	.PLATE,FLOOR,METAL..... UOC:AVY,A13,A14,BVY,HVY,H13,H14,NNN	1
8	PFOZZ	2540012491592	19207	12340413	.FRAME ASSEMBLY MORT..... UOC:AVY,A13,A14,BVY,HVY,H13,H14,NNN	1
* 9	PAOZZ	5340013145957	19207	12338839-1	.LOOP,STRAP FASTENER..... UOC:AVY,A13,A14,BVY,HVY,H13,H14,NNN	6
10	PAOZZ	5305000888332	80205	MS35190-272	.SCREW,MACHINE #10-24 X .62..... UOC:AVY,A13,A14,BVY,HVY,H13,H14,NNN	2
11	PAOZZ	5305010062053	96906	MS51849-75	.SCREW,MACHINE #10-24 X .62..... UOC:AVY,A13,A14,BVY,HVY,H13,H14,NNN	20
12	PAOZZ	5310008094058	96906	MS27183-10	.WASHER,FLAT 1/4..... UOC:AVY,A13,A14,BVY,HVY,H13,H14,NNN	58
13	PAOZZ	5305012566870	34623	5592817	.SCREW,CAP,HEXAGON H 1/4-20 X 3/4.. UOC:AVY,A13,A14,BVY,HVY,H13,H14,NNN	32
14	PAOZZ	5340011978674	34623	5583568	.HANDLE,BOW..... UOC:AVY,A13,A14,BVY,HVY,H13,H14,NNN	7
15	PAOZZ	5305009847343	96906	MS35191-276	.SCREW,MACHINE #10-32 X 1.00..... UOC:AVY,A13,A14,BVY,HVY,H13,H14,NNN	10
16	PAOZZ	5310011981723	19207	12339998-14	.NUT,PLAIN,BLIND RIV #10-32..... UOC:AVY,A13,A14,BVY,HVY,H13,H14,NNN	4
17	PAOZZ	5310000877493	96906	MS27183-13	.WASHER,FLAT 5/16..... UOC:AVY,A13,A14,BVY,HVY,H13,H14,NNN	16
18	PAOZZ	5310008140673	96906	MS51943-33	.NUT,SELF-LOCKING,HE 5/16-18..... UOC:AVY,A13,A14,BVY,HVY,H13,H14,NNN	16
19	PFOZZ	2540012491593	19207	12340419	.BASE ASSEMBLY,MORT..... UOC:AVY,A13,A14,BVY,HVY,H13,H14,NNN	1
20	PAOZZ	5340012570908	31272	45503-10	.STRAP,WEBBING..... UOC:AVY,A13,A14,BVY,HVY,H13,H14,NNN	3
21	PFOZZ	5340012491594	19207	12340382	.BRACKET,MOUNTING..... UOC:AVY,A13,A14,BVY,HVY,H13,H14,NNN	6
22	PAOZZ	5310000614650	96906	MS51943-31	.NUT,SELF-LOCKING,HE 1/4-20..... UOC:AVY,A13,A14,BVY,HVY,H13,H14,NNN	32
23	PFOZZ	5340012552729	19207	12340366	.BRACKET,DOUBLE ANGL..... UOC:AVY,A13,A14,BVY,HVY,H13,H14,NNN	2
24	PAOZZ	5340012609026	31272	45502-10	.STRAP,WEBBING.....	1

(1) ITEM NO	(2) SMR CODE	(3) NSN	(4) CAGEC	(5) PART NUMBER	(6) DESCRIPTION AND USABLE ON CODES(UOC)	(7) QTY
25	PFOZZ	2590012563628	31272	44931-11	UOC:AVY,A13,A14,BVY,HVY,H13,H14,NNN .BRACKET,AMMO CONTAI.....	1
26	PAOZZ	2590011854390	31272	44672-11	UOC:AVY,A13,A14,BVY,HVY,H13,H14,NNN STRAP ASSEMBLY,TOOL PART OF KIT P/N 12338103.....	2
27	PAOZZ	5330011983521	19207	12340721	UOC:AVY,A13,A14,BVY,HVY,H13,H14,NNN RUBBER STRIP PART OF KIT P/N 12338103.....	5
28	PAOZZ	7690012487679	19207	12340377	UOC:AVY,A13,A14,BVY,HVY,H13,H14,NNN DECAL PART OF KIT P/N 12338103.....	1
29	PAOZZ	5340012547191	31272	45410-10	UOC:AVY,A13,A14,BVY,HVY,H13,H14,NNN STRAP,WEBBING PART OF KIT P/N 12338103.....	2
30	PFOZZ	2540012491595	19207	12340401	UOC:AVY,A13,A14,BVY,HVY,H13,H14,NNN RACK ASSEMBLY,AMMO PART OF KIT P/N 12338103.....	1
31	MOOZZ		34623	5595995	UOC:AVY,A13,A14,BVY,HVY,H13,H14,NNN .U-CHANNEL MAKE FROM TUBING,P/N M6855/4-16H029,8.3 INCHES LONG.....	2
32	MOOZZ		34623	5594278	UOC:AVY,A13,A14,BVY,HVY,H13,H14,NNN .U-CHANNEL MAKE FROM TUBING,P/N M6855/4-16H029,6.3 INCHES LONG.....	2
33	PAOZZ	7690012487680	19207	12340372	UOC:AVY,A13,A14,BVY,HVY,H13,H14,NNN DECAL PART OF KIT P/N 12338103.....	1
34	PAOZZ	5305000712067	80204	B1821BH050C125N	UOC:AVY,A13,A14,BVY,HVY,H13,H14,NNN SCREW,CAP,HEXAGON H 1/2-13 X 1.25 PART OF KIT P/N 12338103.....	4
35	PAOZZ	5310001670823	88044	AN960-816	UOC:AVY,A13,A14,BVY,HVY,H13,H14,NNN WASHER,FLAT 1/2 PART OF KIT P/N 12338103.....	12
36	PAOZZ	5310004883889	96906	MS51943-39	UOC:AVY,A13,A14,BVY,HVY,H13,H14,NNN NUT,SELF-LOCKING,HE 1/2-13 PART OF KIT P/N 12338103.....	6
37	PAOZZ	5310008095997	96906	MS27183-17	UOC:AVY,A13,A14,BVY,HVY,H13,H14,NNN WASHER,FLAT 1/2 PART OF KIT P/N 12338103.....	24
38	PAOZZ	5305000712070	80204	B1821BH050C175N	UOC:AVY,A13,A14,BVY,HVY,H13,H14,NNN SCREW,CAP,HEXAGON H 1/2-13 X 1.75 PART OF KIT P/N 12338103.....	6
39	PAOZZ	7690012487681	19207	12340379	UOC:AVY,A13,A14,BVY,HVY,H13,H14,NNN DECAL PART OF KIT P/N 12338103..... UOC:AVY,A13,A14,BVY,HVY,H13,H14,NNN	1

END OF FIGURE

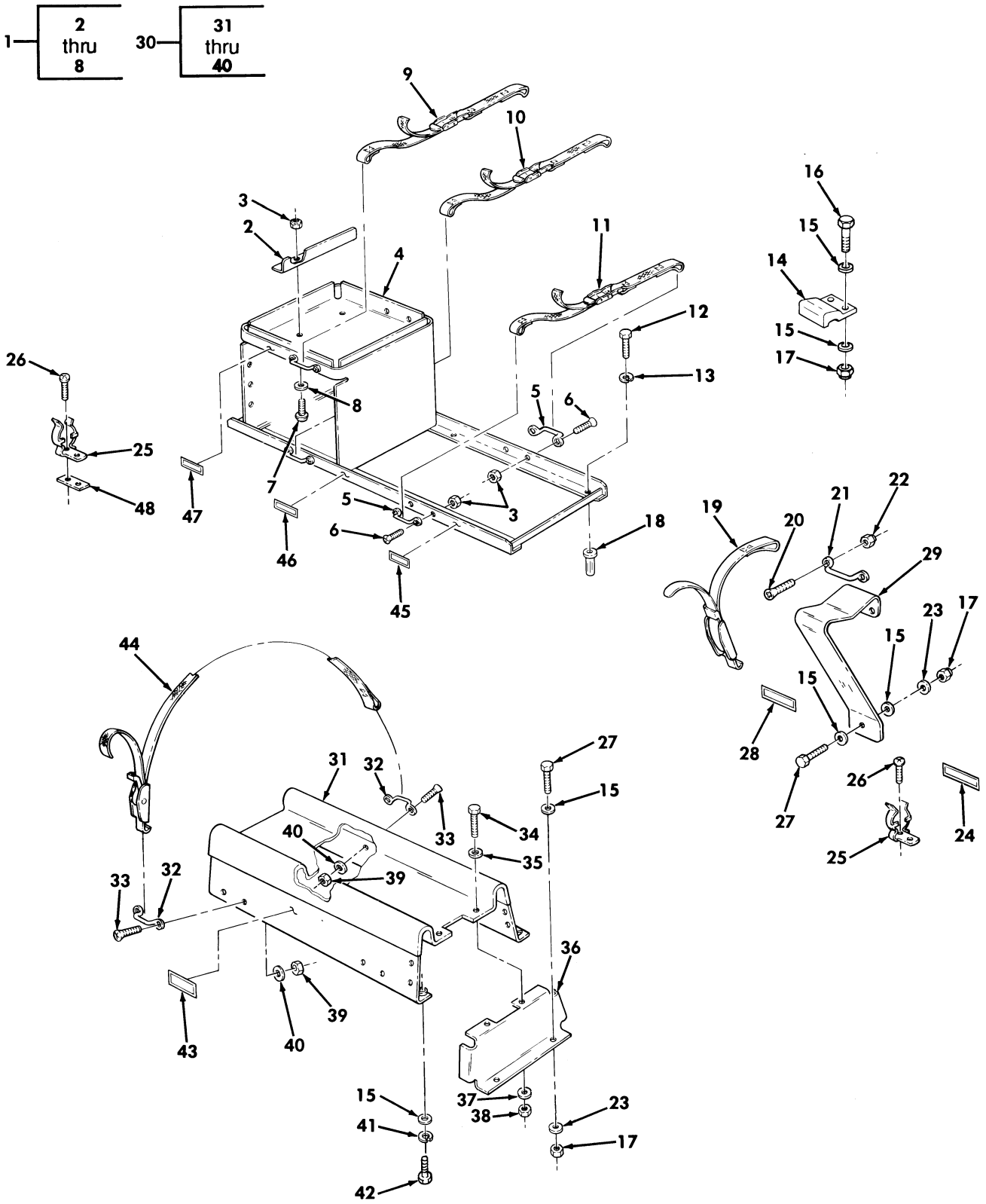

Figure 430. 81 MM Mortar Kit, Equipment Rack Assembly, Barrel Stowage Bracket, and Bipod Stowage Tray Assembly.

(1) ITEM NO	(2) SMR CODE	(3) NSN	(4) CAGEC	(5) PART NUMBER	(6) DESCRIPTION AND USABLE ON CODES(UOC)	(7) QTY
					GROUP 3307 SPECIAL PURPOSE KITS	
					FIG. 430 81 MM MORTAR KIT,EQUIPMENT RACK ASSEMBLY,BARREL STOWAGE BRACKET ,AND BIPOD STOWAGE TRAY ASSEMBLY	
1	PFOOO	2590012491596	19207	12340414	RACK,AMMUNITION STO PART OF KIT P/N 12338103..... UOC:AVY,A13,A14,BVY,HVY,H13,H14,NNN	1
2	PFOZZ	5340012559515	19207	12340390	.BRACKET,ANGLE..... UOC:AVY,A13,A14,BVY,HVY,H13,H14,NNN	1
3	PAOZZ	5310012033217	34623	5584710	.NUT,SELF-LOCKING,HE #10-24..... UOC:AVY,A13,A14,BVY,HVY,H13,H14,NNN	14
4	PFOZZ	2540012491597	19207	12340421	.RACK ASSEMBLY,81MM..... UOC:AVY,A13,A14,BVY,HVY,H13,H14,NNN	1
* 5	PAOZZ	5340013145957	19207	12338839-1	.LOOP,STRAP FASTENER..... UOC:AVY,A13,A14,BVY,HVY,H13,H14,NNN	6
6	PAOZZ	5305000888332	80205	MS35190-272	.SCREW,MACHINE #10-24 X .62..... UOC:AVY,A13,A14,BVY,HVY,H13,H14,NNN	12
7	PAOZZ	5305009846210	08484	WA-1429-10	.SCREW,MACHINE #10-24 X 1/2..... UOC:AVY,A13,A14,BVY,HVY,H13,H14,NNN	2
8	PAOZZ	5310000145850	96906	MS27183-42	.WASHER,FLAT #10..... UOC:AVY,A13,A14,BVY,HVY,H13,H14,NNN	2
9	PAOZZ	5340012552812	31272	44648-26	STRAP,WEBBING PART OF KIT P/N 12338103..... UOC:AVY,A13,A14,BVY,HVY,H13,H14,NNN	1
10	PAOZZ	5340012572644	31272	45096-13	STRAP,WEBBING PART OF KIT P/N 12338103..... UOC:AVY,A13,A14,BVY,HVY,H13,H14,NNN	1
11	PAOZZ	5340012560942	31272	44648-25	STRAP,WEBBING PART OF KIT P/N 12338103..... UOC:AVY,A13,A14,BVY,HVY,H13,H14,NNN	1
12	PAOZZ	5306010758519	96906	MS90725-36	BOLT,MACHINE 5/16-18 X 1.25 PART OF KIT P/N 12338103..... UOC:AVY,A13,A14,BVY,HVY,H13,H14,NNN	6
13	PAOZZ	5310004079566	96906	MS35338-45	WASHER,LOCK 5/16 PART OF KIT P/N 12338103..... UOC:AVY,A13,A14,BVY,HVY,H13,H14,NNN	6
14	PAOZZ	5340012646108	34623	5597186	STRAP,RETAINING PART OF KIT P/N 12338103..... UOC:AVY,A13,A14,BVY,HVY,H13,H14,NNN	2
15	PAOZZ	5310008094058	96906	MS27183-10	WASHER,FLAT 1/4 PART OF KIT P/N 12338103..... UOC:AVY,A13,A14,BVY,HVY,H13,H14,NNN	24
16	PAOZZ	5305002253842	80204	B1821BH025C113N	SCREW,CAP,HEXAGON H 1/4-20 X 1.125 PART OF KIT P/N 12338103..... UOC:AVY,A13,A14,BVY,HVY,H13,H14,NNN	4
17	PAOZZ	5310000614650	96906	MS51943-31	NUT,SELF-LOCKING,HE 1/4-20 PART OF KIT P/N 12338103..... UOC:AVY,A13,A14,BVY,HVY,H13,H14,NNN	15
18	PAOZZ	5310011981724	03481	S31P280	NUT,PLAIN,BLIND RIV 5/16-18 PART OF KIT P/N 12338103..... UOC:AVY,A13,A14,BVY,HVY,H13,H14,NNN	6

(1) ITEM NO	(2) SMR CODE	(3) NSN	(4) CAGEC	(5) PART NUMBER	(6) DESCRIPTION AND USABLE ON CODES(UOC)	(7) QTY
19	PAOZZ	5340012547191	31272	45410-10	STRAP,WEBBING PART OF KIT P/N 12338103..... UOC:AVY,A13,A14,BVY,HVY,H13,H14,NNN	2
20	PAOZZ	5305000888332	80205	MS35190-272	SCREW,MACHINE #10-24 X .62 PART OF KIT P/N 12338103..... UOC:AVY,A13,A14,BVY,HVY,H13,H14,NNN	4
* 21	PAOZZ	5340013145957	19207	12338839-1	LOOP,STRAP FASTENER PART OF KIT P/N 12338103..... UOC:AVY,A13,A14,BVY,HVY,H13,H14,NNN	2
22	PAOZZ	5310012033217	34623	5584710	NUT,SELF-LOCKING,HE #10-24 PART OF KIT P/N 12338103..... UOC:AVY,A13,A14,BVY,HVY,H13,H14,NNN	4
23	PAOZZ	5310011023270	24617	2436161	WASHER,FLAT 1/4 PART OF KIT P/N 12338103..... UOC:AVY,A13,A14,BVY,HVY,H13,H14,NNN	11
24	PAOZZ	7690012487682	19207	12340374	DECAL PART OF KIT P/N 12338103..... UOC:AVY,A13,A14,BVY,HVY,H13,H14,NNN	1
25	PAOZZ	5340012573778	19207	12340387	CLIP,SPRING TENSION PART OF KIT P/N 12338103..... UOC:AVY,A13,A14,BVY,HVY,H13,H14,NNN	2
26	PAOZZ	5305012560406	34623	5593006	SCREW,ASSEMBLED WAS #10-32 X 3/4 PART OF KIT P/N 12338103..... UOC:AVY,A13,A14,BVY,HVY,H13,H14,NNN	4
27	PAOZZ	5305012566870	34623	5592817	SCREW,CAP,HEXAGON H 1/4-20 X 3/4 PART OF KIT P/N 12338103..... UOC:AVY,A13,A14,BVY,HVY,H13,H14,NNN	11
28	PAOZZ	7690012484907	19207	12340423	MARKER,IDENTIFICATI PART OF KIT P/N 12338103..... UOC:AVY,A13,A14,BVY,HVY,H13,H14,NNN	1
29	PFOZZ	5342012607853	34623	5593990	BRACKET,SPECIAL PART OF KIT P/N 12338103..... UOC:AVY,A13,A14,BVY,HVY,H13,H14,NNN	2
30	PFOZZ	2540012491598	19207	12340411	TRAY ASSEMBLY,BIPOD PART OF KIT P/N 12338103..... UOC:AVY,A13,A14,BVY,HVY,H13,H14,NNN	1
31	PFOZZ	2540012507592	19207	12340420	.TRAY,STOWAGE,BIPOD..... UOC:AVY,A13,A14,BVY,HVY,H13,H14,NNN	1
* 32	PAOZZ	5340013145957	19207	12338839-1	.LOOP,STRAP FASTENER..... UOC:AVY,A13,A14,BVY,HVY,H13,H14,NNN	4
33	PAOZZ	5305000888332	80205	MS35190-272	.SCREW,MACHINE #10-24 X .64..... UOC:AVY,A13,A14,BVY,HVY,H13,H14,NNN	8
34	PAOZZ	5305012566870	34623	5592817	.SCREW,CAP,HEXAGON H 1/4-20 X 3/4.. UOC:AVY,A13,A14,BVY,HVY,H13,H14,NNN	6
35	PAOZZ	5310008093078	96906	MS27183-11	.WASHER,FLAT 1/4..... UOC:AVY,A13,A14,BVY,HVY,H13,H14,NNN	6
36	PFOZZ	5340012487649	19207	12340409	.BRACKET,DOUBLE ANGL..... UOC:AVY,A13,A14,BVY,HVY,H13,H14,NNN	1
37	PAOZZ	5310011023270	24617	2436161	.WASHER,FLAT 1/4..... UOC:AVY,A13,A14,BVY,HVY,H13,H14,NNN	6
38	PAOZZ	5310000614650	96906	MS51943-31	.NUT,SELF-LOCKING,HE 1/4-20..... UOC:AVY,A13,A14,BVY,HVY,H13,H14,NNN	6
39	PAOZZ	5310012033217	34623	5584710	.NUT,SELF-LOCKING,HE #10-24..... UOC:AVY,A13,A14,BVY,HVY,H13,H14,NNN	8
40	PAOZZ	5310000145850	96906	MS27183-42	.WASHER,FLAT #10.....	8

(1) ITEM NO	(2) SMR CODE	(3) NSN	(4) CAGEC	(5) PART NUMBER	(6) DESCRIPTION AND USABLE ON CODES(UOC)	(7) QTY
41	PAOZZ	5310005825965	96906	MS35338-44	UOC:AVY,A13,A14,BVY,HVY,H13,H14,NNN WASHER,LOCK 1/4 PART OF KIT P/N 12338103.....	3
42	PAOZZ	5305002253843	80204	B1821BH025C100N	UOC:AVY,A13,A14,BVY,HVY,H13,H14,NNN SCREW,CAP,HEXAGON H 1/4-20 X 1.00 PART OF KIT P/N 12338103.....	3
43	PAOZZ	7690012484908	19207	12340373	UOC:AVY,A13,A14,BVY,HVY,H13,H14,NNN DECAL PART OF KIT P/N 12338103.....	1
44	PAOZZ	5340012547190	31272	45410-11	UOC:AVY,A13,A14,BVY,HVY,H13,H14,NNN STRAP,WEBBING PART OF KIT P/N 12338103.....	2
45	PAOZZ	7690012484909	19207	12340375	UOC:AVY,A13,A14,BVY,HVY,H13,H14,NNN DECAL PART OF KIT P/N 12338103.....	1
46	PAOZZ	7690012487683	19207	12340378	UOC:AVY,A13,A14,BVY,HVY,H13,H14,NNN DECAL PART OF KIT P/N 12338103.....	1
47	PAOZZ	7690012501101	19207	12340376	UOC:AVY,A13,A14,BVY,HVY,H13,H14,NNN DECAL PART OF KIT P/N 12338103.....	1
48	PFOZZ	5975011975505	19207	12340167	UOC:AVY,A13,A14,BVY,HVY,H13,H14,NNN MOUNTING BASE,ELECT PART OF KIT P/N 12338103.....	1
KIT	PDOZZ	2540012507591	34623	12338103	UOC:AVY,A13,A14,BVY,HVY,H13,H14,NNN INSTALLATION AND EQ.....	1
					UOC:AVY,A13,A14,BVY,HVY,H13,H14,NNN	
					BOLT,MACHINE (6) 430-12	
					BOX,AMMUNITION STOW(1) 429-1	
					BRACKET,SPECIAL (2) 430-29	
					CLIP,SPRING TENSION(2) 430-25	
					DECAL (1) 429-28	
					DECAL (1) 429-33	
					DECAL (1) 429-39	
					DECAL (1) 430-24	
					DECAL (1) 430-43	
					DECAL (1) 430-45	
					DECAL (1) 430-46	
					DECAL (1) 430-47	
					HANDLE,BOW (2) 430-21	
					MARKER,IDENTIFICATI(1) 430-28	
					MOUNTING BASE,ELECT(1) 430-48	
					NUT,PLAIN,BLIND RIV(6) 430-18	
					NUT,SELF-LOCKING,HE(6) 429-36	
					NUT,SELF-LOCKING,HE(15) 430-17	
					NUT,SELF-LOCKING,HE(4) 430-22	
					RACK,AMMUNITION STO(1) 430-1	
					RACK ASSEMBLY,AMMO (1) 429-30	
					RUBBER STRIP (5) 429-27	
					SCREW,ASSEMBLED WAS(4) 430-26	
					SCREW,CAP,HEXAGON H(4) 429-34	
					SCREW,CAP,HEXAGON H(6) 429-38	
					SCREW,CAP,HEXAGON H(4) 430-16	
					SCREW,CAP,HEXAGON H(11) 430-27	
					SCREW,CAP,HEXAGON H(3) 430-42	
					SCREW,MACHINE (4) 430-20	
					STRAP ASSEMBLY,TOOL(2) 429-26	

(1) ITEM NO	(2) SMR CODE	(3) NSN	(4) CAGEC	(5) PART NUMBER	(6) DESCRIPTION AND USABLE ON CODES(UOC)	(7) QTY
					STRAP,RETAINING (2) 430-14	
					STRAP,WEBBING (2) 429-29	
					STRAP,WEBBING (1) 430-9	
					STRAP,WEBBING (1) 430-10	
					STRAP,WEBBING (1) 430-11	
					STRAP,WEBBING (2) 430-19	
					STRAP,WEBBING (2) 430-44	
					TRAY ASSEMBLY,BIPOD(1) 430-30	
					WASHER,FLAT (12) 429-35	
					WASHER,FLAT (24) 429-37	
					WASHER,FLAT (24) 430-15	
					WASHER,FLAT (11) 430-23	
					WASHER,LOCK (6) 430-13	
					WASHER,LOCK (3) 430-41	

END OF FIGURE

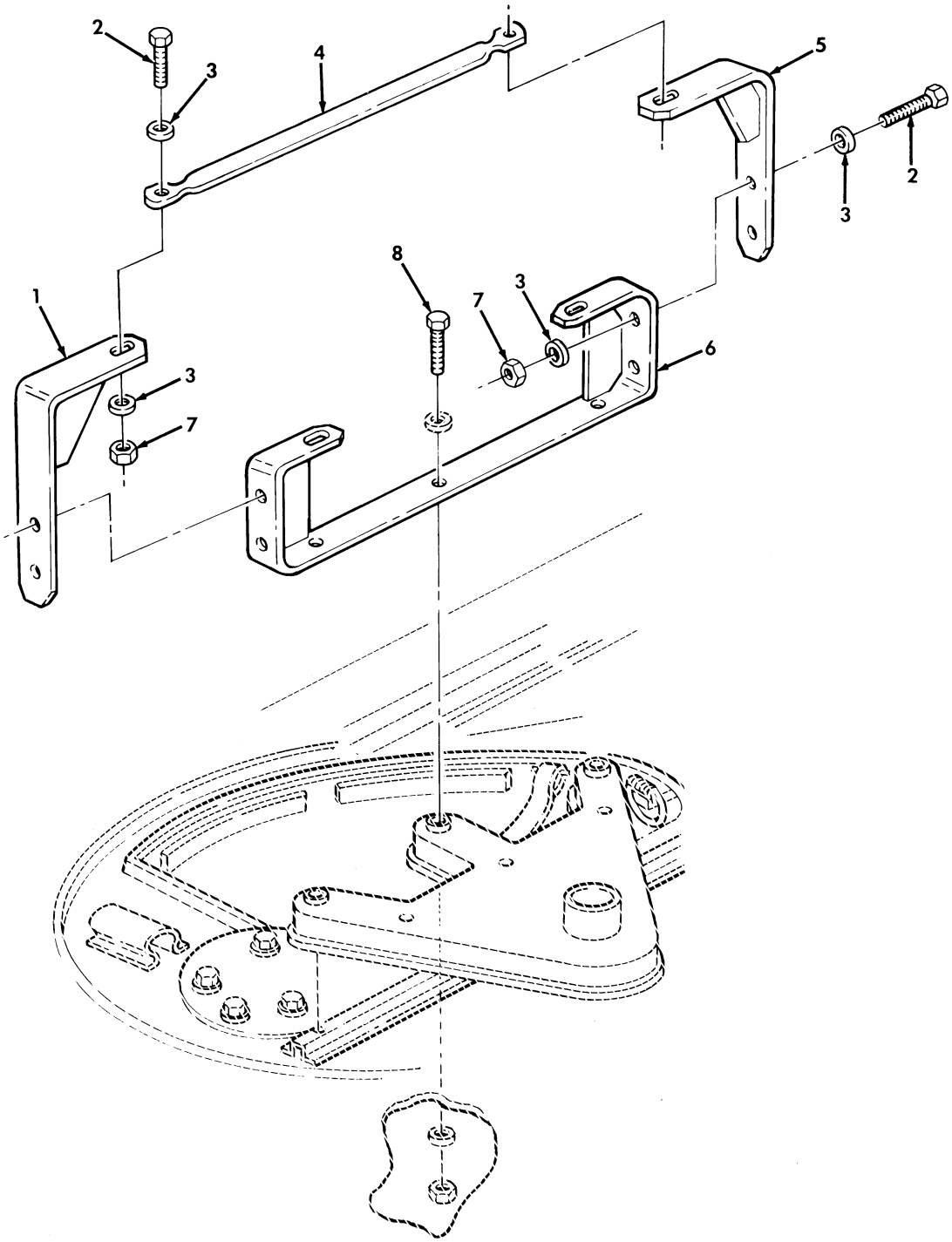

Figure 431. Traversing Bar Kit.

(1) ITEM NO	(2) SMR CODE	(3) NSN	(4) CAGEC	(5) PART NUMBER	(6) DESCRIPTION AND USABLE ON CODES(UOC)	(7) QTY
					GROUP 3307 SPECIAL PURPOSE KITS	
					FIG. 431 TRAVERSING BAR KIT	
1	PAOZZ	5340012958169	19207	12342044-1	BRACKET,ANGLE UPPER,L.H. PART OF KIT P/N 12342040..... UOC:A25,A26,B25,H25,H26	1
2	PAOZZ	5305000680511	80204	B1821BH038C125N	SCREW,CAP,HEXAGON H 3/8-16 X 1.25 PART OF KIT P/N 12342040..... UOC:A25,A26,B25,H25,H26	6
3	PAOZZ	5310000806004	96906	MS27183-14	WASHER,FLAT 3/8 PART OF KIT P/N 12342040..... UOC:A25,A26,B25,H25,H26	12
4	PAOZZ	3040013271426	19207	12342045	CONNECTING LINK,RIG PART OF KIT P/N 12342040..... UOC:A25,A26,B25,H25,H26	1
5	PAOZZ	5340012951088	19207	12342044-2	BRACKET,ANGLE UPPER R.H. PART OF KIT P/N 12342040..... UOC:A25,A26,B25,H25,H26	1
6	PAOZZ	5340013241076	19207	12342043	BRACKET,DOUBLE ANGL LOWER PART OF KIT P/N 12342040..... UOC:A25,A26,B25,H25,H26	1
7	PAOZZ	5310009359021	96906	MS51943-35	NUT,SELF-LOCKING,HE 3/8-16 PART OF KIT P/N 12342040..... UOC:A25,A26,B25,H25,H26	6
8	PAOZZ	5305013869052	80204	B1821BH038C600N	SCREW,CAP,HEXAGON H LOWER PART OF KIT P/N 12342040..... UOC:A25,A26,B25,H25,H26	3
KIT	PDOZZ	1005013216774	9C234	12342040	TRAVERSING MECHANIS..... UOC:A25,A26,B25,H25,H26	1
					BRACKET,ANGLE (1) 431-1	
					BRACKET,ANGLE (1) 431-5	
					BRACKET,DOUBLE ANGL(1) 431-6	
					CONNECTING LINK,RIG(1) 431-4	
					NUT,SELF-LOCKING,HE(6) 431-7	
					SCREW,CAP,HEXAGON H(3) 431-8	
					SCREW,CAP,HEXAGON H(6) 431-2	
					WASHER,FLAT (12) 431-3	

END OF FIGURE

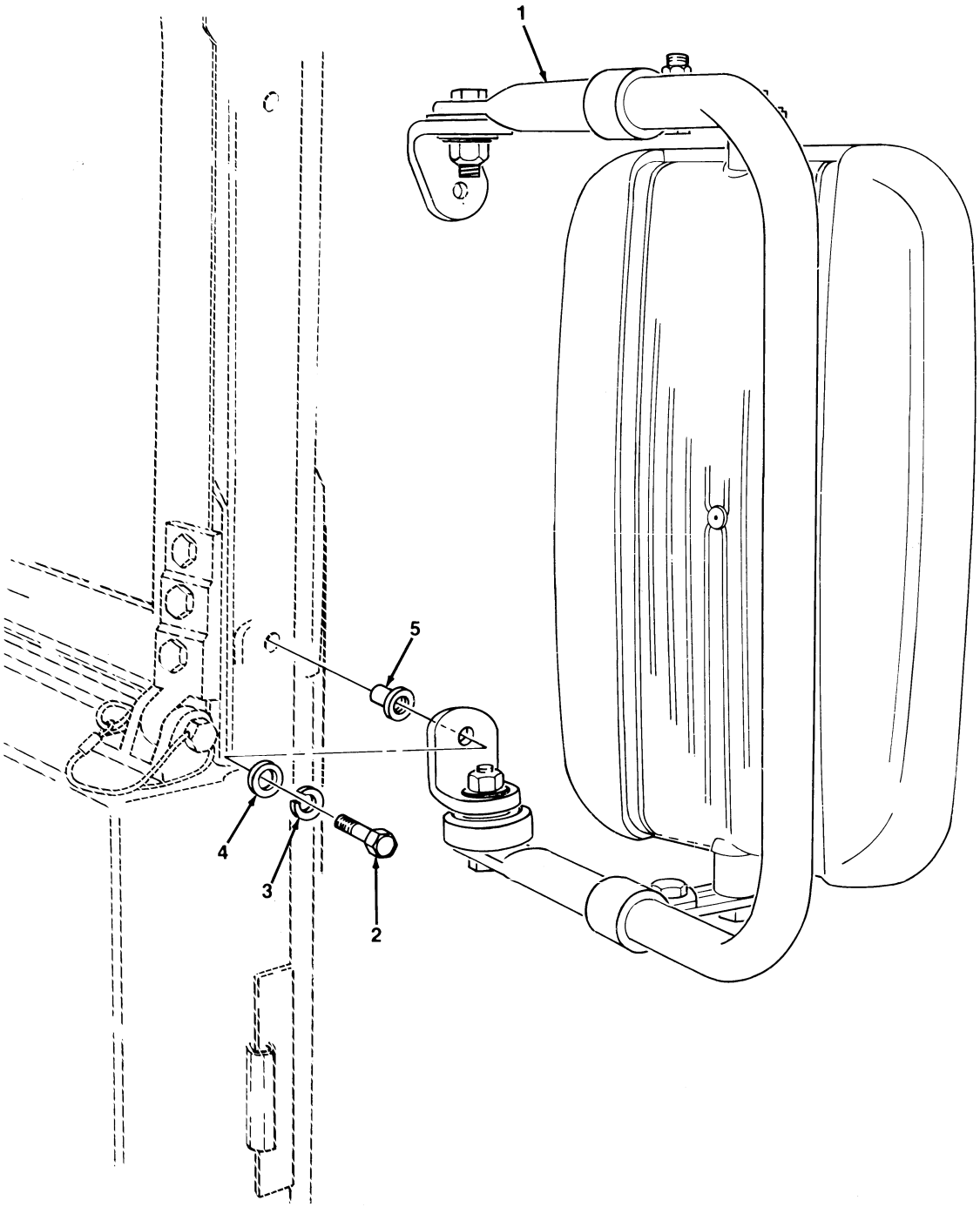

Figure 432. Rearview Mirror Mounting Kit.

(1) ITEM NO	(2) SMR CODE	(3) NSN	(4) CAGEC	(5) PART NUMBER	(6) DESCRIPTION AND USABLE ON CODES(UOC)	(7) QTY
					GROUP 3307 SPECIAL PURPOSE KITS	
					FIG. 432 REARVIEW MIRROR MOUNTING KIT	
* 1	PAOZZ	2540013149379	34623	12342130	MIRROR ASSEMBLY,REA REARVIEW,R.H. PART OF KIT P/N 57K3214..... UOC:H11,H13,H14,H15,H16,H17,H18,H20, H21,H24,H25,H26,H27,H28,MMM	1
* 1	PAOZZ	2540014112130	34623	12343061	MIRROR ASSEMBLY,REA REARVIEW,L.H., GREEN PART OF KIT P/N 57K3214..... UOC:H11,H13,H14,H15,H16,H17,H18,H20, H21,H24,H25,H26,H27,H28,MMM	1
* 1	PAOZZ	2540014873673	70082	1411	MIRROR ASSEMBLY,REA REARVIEW,L.H., TAN.....	1
* 1	PAOZZ	2540014379932	70082	1302	MIRROR ASSEMBLY,REA REARVIEW,R.H., TAN.....	1
* 2	PAOZZ	5306002264829	80204	B1821BH031C125N	BOLT,MACHINE 5/16-18 X 1.25 PART OF KIT P/N 57K3214..... UOC:H11,H13,H14,H15,H16,H17,H18,H20, H21,H24,H25,H26,H27,H28,MMM	4
* 3	PAOZZ	5310004079566	96906	MS35338-45	WASHER,LOCK 5/16 PART OF KIT P/N 57K3214..... UOC:H11,H13,H14,H15,H16,H17,H18,H20, H21,H24,H25,H26,H27,H28,MMM	4
* 4	PAOZZ	5310000814219	96906	MS27183-12	WASHER,FLAT 5/16 PART OF KIT P/N 57K3214..... UOC:H11,H13,H14,H15,H16,H17,H18,H20, H21,H24,H25,H26,H27,H28,MMM	4
* 5	PAOZZ	5310014133276	78276	ALS4-518-150	NUT,PLAIN,BLIND RIV PART OF KIT P/N 57K3214..... UOC:H11,H13,H14,H15,H16,H17,H18,H20, H21,H24,H25,H26,H27,H28,MMM	4
*KIT	PAOZZ	2540014361626	19207	57K3214	PARTS KIT,MIRROR AS USBL EFF 1 THRU 99,999..... UOC:H11,H13,H14,H15,H16,H17,H18,H20, H21,H24,H25,H26,H27,H28,MMM	1
					BOLT,MACHINE (4) 432-2	
					MIRROR ASSEMBLY,REA(1) 432-1	
					MIRROR ASSEMBLY,REA(1) 432-1	
					NUT,PLAIN,BLIND RIV(4) 432-5	
					WASHER,FLAT (4) 432-4	
					WASHER,LOCK (4) 432-3	

END OF FIGURE

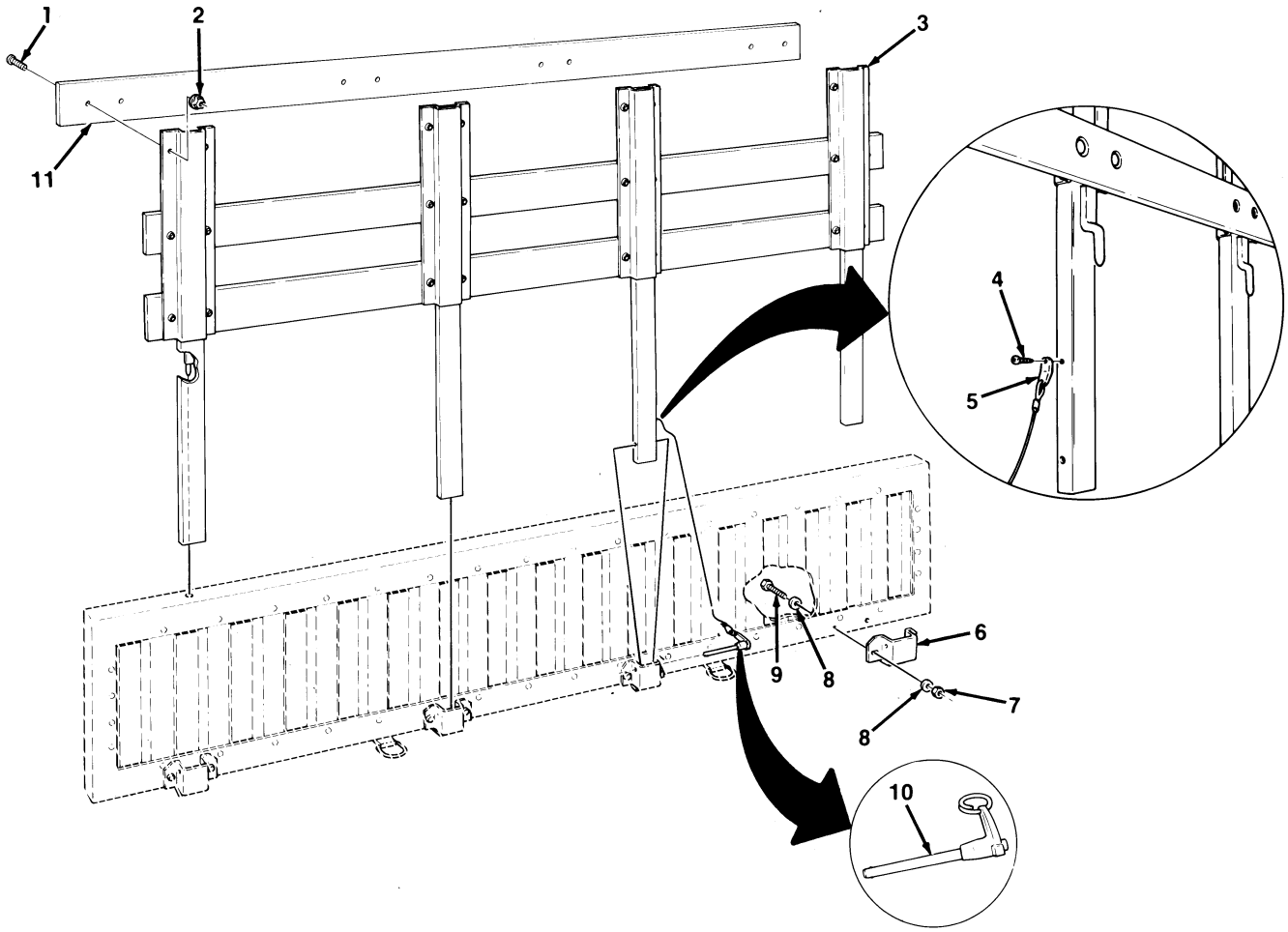

Figure 433. Cargo Barrier Extension Kit.

(1) ITEM NO	(2) SMR CODE	(3) NSN	(4) CAGEC	(5) PART NUMBER	(6) DESCRIPTION AND USABLE ON CODES(UOC)	(7) QTY
					GROUP 3307 SPECIAL PURPOSE KITS	
					FIG. 433 CARGO BARRIER EXTENSION KIT	
1	PAOZZ	5306009115005	80205	MS35751-42	BOLT,SQUARE NECK 5/16-18 X 1.25 PART OF KIT P/N 57K0218 PART OF KIT P/N 57K0222 PART OF KIT P/N 5705613. UOC:AVY,A13,A14,BVY,HVY,H13,H14,NNN	24
2	PAOZZ	5310009334310	24617	271184	NUT,PLAIN,ASSEMBLED 5/16-18 PART OF KIT P/N 57K0218 PART OF KIT P/N 57K0222 PART OF KIT P/N 5705613..... UOC:AVY,A13,A14,BVY,HVY,H13,H14,NNN	24
3	PAOZZ	5340013183366	19207	12342284	BRACKET,MOUNTING GREEN(PAINT TAN OR WHITE IF REQUIRED)PART OF KIT P/N 57K0218 PART OF KIT P/N 57K0222 PART OF KIT P/N 5705613..... UOC:AVY,A13,A14,BVY,HVY,H13,H14,NNN	4
4	PAOZZ	5305004324170	96906	MS51861-35	SCREW,TAPPING #8-18 X .50 PART OF KIT P/N 57K0218 PART OF KIT P/N 57K0222 PART OF KIT P/N 5705613..... UOC:AVY,A13,A14,BVY,HVY,H13,H14,NNN	1
5	PAOZZ	4010010721167	84256	LT1504-C6-08	WIRE ROPE ASSEMBLY, PART OF KIT P/N 57K0218 PART OF KIT P/N 57K0222 PART OF KIT P/N 5705613..... UOC:AVY,A13,A14,BVY,HVY,H13,H14,NNN	1
6	PAOZZ	5340013252891	19207	12342281	STRAP,RETAINING GREEN(PAINT TAN OR WHITE IF REQUIRED)PART OF KIT P/N 57K0218 PART OF KIT P/N 57K0222 PART OF KIT P/N 5705613..... UOC:AVY,A13,A14,BVY,HVY,H13,H14,NNN	4
7	PAOZZ	5310002416658	96906	MS51943-34	NUT,SELF-LOCKING,HE 5/16-24 PART OF KIT P/N 57K0218 PART OF KIT P/N 57K0222 PART OF KIT P/N 5705613..... UOC:AVY,A13,A14,BVY,HVY,H13,H14,NNN	8
8	PAOZZ	5310000814219	96906	MS27183-12	WASHER,FLAT 5/16 PART OF KIT P/N 57K0218 PART OF KIT P/N 57K0222 PART OF KIT P/N 5705613..... UOC:AVY,A13,A14,BVY,HVY,H13,H14,NNN	16
9	PAOZZ	5306000501238	80204	B1821BH031F075N	BOLT,MACHINE 5/16-24 X 3/4 PART OF KIT P/N 57K0218 PART OF KIT P/N 57K0222 PART OF KIT P/N 5705613..... UOC:AVY,A13,A14,BVY,HVY,H13,H14,NNN	8
10	PAOZZ	5315003769034	96906	MS17986-C423	PIN,QUICK RELEASE PART OF KIT P/N 57K0218 PART OF KIT P/N 57K0222 PART OF KIT P/N 5705613..... UOC:AVY,A13,A14,BVY,HVY,H13,H14,NNN	1
11	PAOZZ	5340013180212	19207	12342285	BRACKET,MOUNTING GREEN(PAINT TAN OR WHITE IF REQUIRED)PART OF KIT P/N 57K0218 PART OF KIT P/N 57K0222 PART OF KIT P/N 5705613..... UOC:AVY,A13,A14,BVY,HVY,H13,H14,NNN	3
KIT	PAOZZ	2590013374071	19207	5705613	MODIFICATION KIT,VE CARGO BARRIER EXTENSION,GREEN.....	1

(1) ITEM NO	(2) SMR CODE	(3) NSN	(4) CAGEC	(5) PART NUMBER	(6) DESCRIPTION AND USABLE ON CODES(UOC)	(7) QTY
					UOC:AVY,A13,A14,BVY,HVY,H13,H14,NNN	
					BOLT,MACHINE (8) 433-9	
					BOLT,SQUARE NECK (24) 433-1	
					BRACKET,MOUNTING (4) 433-3	
					BRACKET,MOUNTING (3) 433-11	
					NUT,PLAIN ASSEMBLED(24) 433-2	
					NUT,SELF-LOCKING,HE(8) 433-7	
					PIN,QUICK RELEASE (1) 433-10	
					SCREW,TAPPING (1) 433-4	
					STRAP,RETAINING (4) 433-6	
					WASHER,FLAT (16) 433-8	
					WIRE ROPE ASSEMBLY (1) 433-5	
KIT	PDOZZ	2590013424918	19207	57K0218	MODIFICATION KIT,VE CARGO BARRIER EXTENSION,TAN.....	1
					UOC:AVY,A13,A14,BVY,HVY,H13,H14,NNN	
					BOLT,MACHINE (8) 433-9	
					BOLT,SQUARE NECK (24) 433-1	
					BRACKET,MOUNTING (4) 433-3	
					BRACKET,MOUNTING (3) 433-11	
					NUT,PLAIN ASSEMBLED(24) 433-2	
					NUT,SELF-LOCKING,HE(8) 433-7	
					PIN,QUICK RELEASE (1) 433-10	
					SCREW,TAPPING (1) 433-4	
					STRAP,RETAINING (4) 433-6	
					WASHER,FLAT (16) 433-8	
					WIRE ROPE ASSEMBLY (1) 433-5	
KIT	PDOZZ		19207	57K0222	MODIFICATION KIT,VE CARGO BARRIER EXTENSION,WHITE.....	1
					UOC:AVY,A13,A14,BVY,HVY,H13,H14,NNN	
					BOLT,MACHINE (8) 433-9	
					BOLT,SQUARE NECK (24) 433-1	
					BRACKET,MOUNTING (4) 433-3	
					BRACKET,MOUNTING (3) 433-11	
					NUT,PLAIN ASSEMBLED(24) 433-2	
					NUT,SELF-LOCKING,HE(8) 433-7	
					PIN,QUICK RELEASE (1) 433-10	
					SCREW,TAPPING (1) 433-4	
					STRAP,RETAINING (4) 433-6	
					WASHER,FLAT (16) 433-8	
					WIRE ROPE ASSEMBLY (1) 433-5	

END OF FIGURE

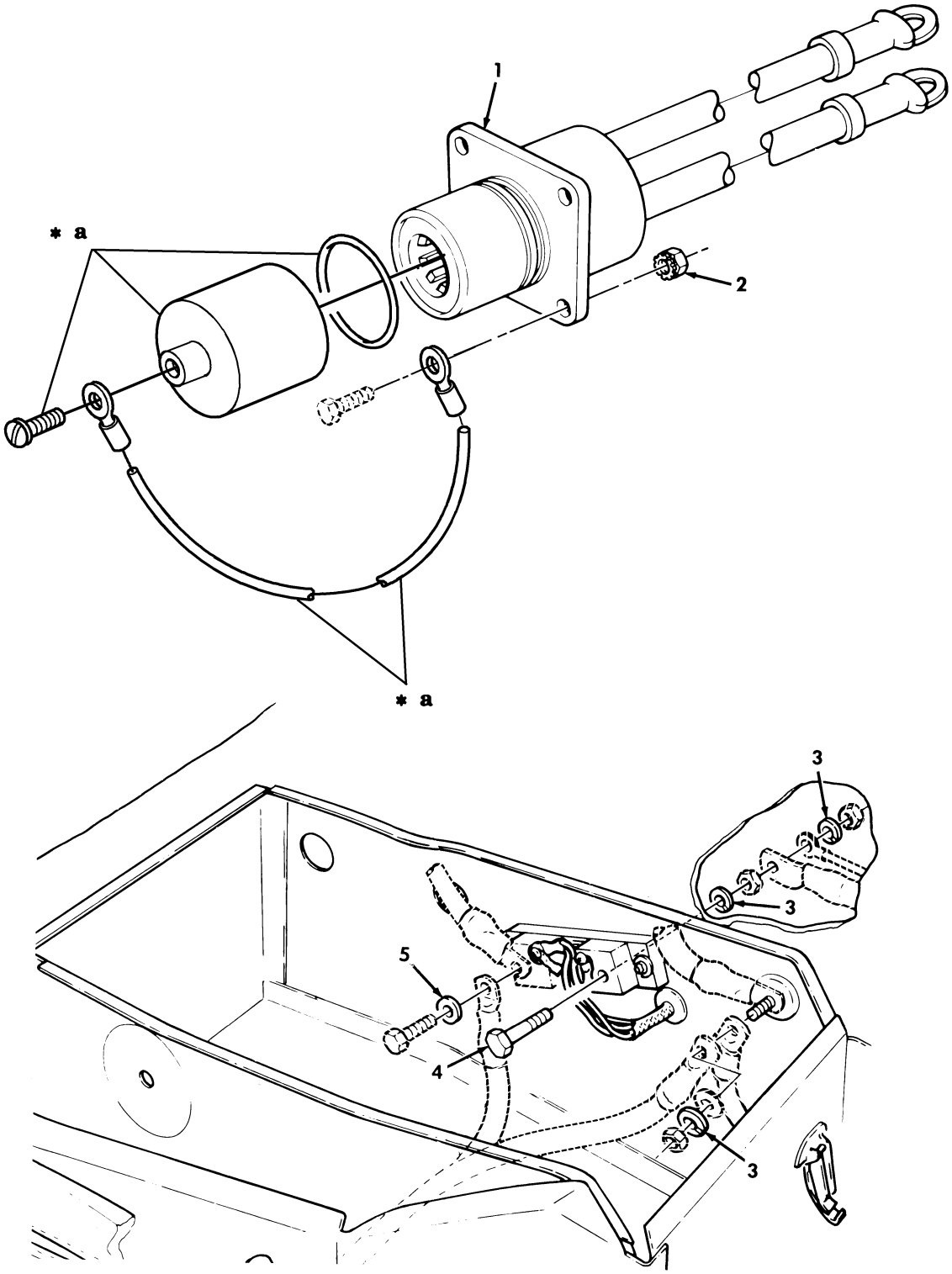

* a PART OF FIGURE 72

Figure 434. Slave Receptacle Kit.

(1) ITEM NO	(2) SMR CODE	(3) NSN	(4) CAGEC	(5) PART NUMBER	(6) DESCRIPTION AND USABLE ON CODES(UOC)	(7) QTY
					GROUP 3307 SPECIAL PURPOSE KITS	
					FIG. 434 SLAVE RECEPTACLE KIT	
1	PAOZZ	6150013175853	19207	12342303	CABLE ASSEMBLY,POWE USBL EFF 1 THRU 99,999 PART OF KIT P/N 5705623..... UOC:H13,H14,H15,H16,H17,H18,H20,H21, H25,H26,H28	1
2	PAOZZ	5310012041039	7X677	272474	NUT,PLAIN,ASSEMBLED PART OF KIT P/N 5705623..... UOC:H13,H14,H15,H16,H17,H18,H20,H21, H25,H26,H28	4
3	PAOZZ	5310005845272	31007	10332B	WASHER,LOCK PART OF KIT P/N 5705623. UOC:H13,H14,H15,H16,H17,H18,H20,H21, H25,H26,H28	3
4	PAOZZ	5305013158649	19207	12342338	SCREW,CAP,HEXAGON H 1/2-13 X 3.00, USBL EFF 1 THRU 99,999 PART OF KIT P/N 5705623..... UOC:H13,H14,H15,H16,H17,H18,H20,H21, H25,H26,H28	1
5	PAOZZ	5310001848971	96906	MS35338-103	WASHER,LOCK USBL EFF 1 THRU 99,999 PART OF KIT P/N 5705623..... UOC:H13,H14,H15,H16,H17,H18,H20,H21, H25,H26,H28	1
KIT	PDOZZ	2920013788035	19207	5705623	PARTS KIT,TERMINAL, USBL EFF 1 THRU 99,999..... UOC:H13,H14,H15,H16,H17,H18,H20,H21, H25,H26,H28	1
					CABLE ASSEMBLY,POWE(1) 434-1	
					NUT,PLAIN,ASSEMBLED(4) 434-2	
					SCREW,CAP,HEXAGON H(1) 434-4	
					WASHER,LOCK (3) 434-3	
					WASHER,LOCK (1) 434-5	

END OF FIGURE

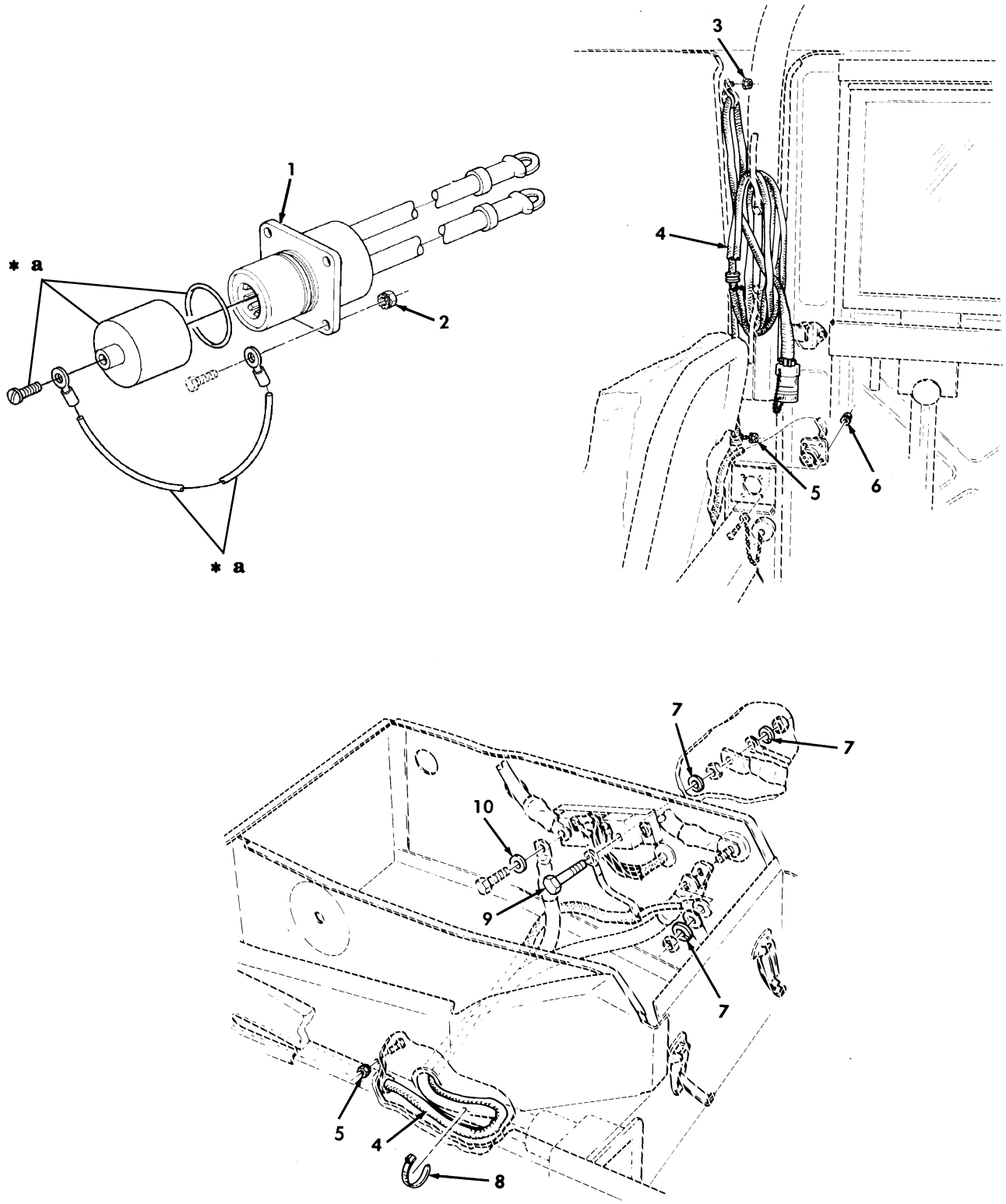

* a PART OF FIGURE 72

Figure 435. Slave Receptacle with Power Cable Assembly Kit.

(1) ITEM NO	(2) SMR CODE	(3) NSN	(4) CAGEC	(5) PART NUMBER	(6) DESCRIPTION AND USABLE ON CODES(UOC)	(7) QTY
					GROUP 3307 SPECIAL PURPOSE KITS	
					FIG. 435 SLAVE RECEPTACLE WITH POWER CABLE ASSEMBLY KIT	
1	PFOZZ	6150013175853	19207	12342303	CABLE ASSEMBLY,POWE USBL EFF 1 THRU 99,999 PART OF KIT P/N 5705624. UOC:H11,H24,H27,MMM	1
2	PAOZZ	5310012041039	7X677	272474	NUT,PLAIN,ASSEMBLED 7/16-24,USBL EFF 1 THRU 99,999 PART OF KIT P/N 5705624..... UOC:H11,H24,H27,MMM	4
3	PAOZZ	5310009334310	24617	271184	NUT,PLAIN,ASSEMBLED 5/16-18,USBL EFF 1 THRU 99,999 PART OF KIT P/N 5705624..... UOC:H11,H24,H27,MMM	4
4	PFOZZ	5995013390190	19207	12340655-1	WIRING HARNESS,BRAN USBL EFF 1 THRU 99,999 PART OF KIT P/N 5705624. UOC:H11,H24,H27,MMM	1
5	PAOZZ	5310010695243	72582	271163	NUT,PLAIN,ASSEMBLED 8-32,USBL EFF 1 THRU 99,999 PART OF KIT P/N 5705624..... UOC:H11,H24,H27,MMM	4
6	PAOZZ	5310001249265	72582	271169	NUT,PLAIN ,ASSEMBLED #10-32,USBL EFF 1 THRU 99,999,PART OF KIT P/N 5705624..... UOC:H11,H24,H27,MMM	4
7	PAOZZ	5310005845272	31007	10332B	WASHER,LOCK 1/2,USBL EFF 1 THRU 99, 999 PART OF KIT P/N 5705624..... UOC:H11,H24,H27,MMM	3
8	PAOZZ	5975004515001	96906	MS3367-3-9	STRAP,TIEDOWN,ELECT USBL EFF 1 THRU 99,999 PART OF KIT P/N 5705624. UOC:H11,H24,H27,MMM	1
9	PAOZZ	5305013158649	19207	12342338	SCREW,CAP,HEXAGON H 1/2-13 X 3.00, USBL EFF 1 THRU 99,999 PART OF KIT P/N 5705624..... UOC:H11,H24,H27,MMM	1
10	PAOZZ	5310001848971	96906	MS35338-103	WASHER,LOCK 3/8,USBL EFF 1 THRU 99, 999 PART OF KIT P/N 5705624..... UOC:H11,H24,H27,MMM	1
KIT	PAOZZ	5975014173267	19207	5705624	ELECTRICAL KIT,SHOP SLAVE RECEPTACLE WITH POWER CABLE ASSEMBLY,USBL EFF 1 THRU 99,999..... UOC:H11,H24,H27,MMM	1
					CABLE ASSEMBLY,POWE(1) 435-1	
					NUT,PLAIN,ASSEMBLED(4) 435-2	
					NUT,PLAIN,ASSEMBLED(4) 435-3	
					NUT,PLAIN,ASSEMBLED(4) 435-5	
					NUT,PLAIN,ASSEMBLED(4) 435-6	
					SCREW,CAP,HEXAGON H(1) 435-9	
					STRAP,TIEDOWN,ELECT(1) 435-8	
					WASHER,LOCK (3) 435-7	
					WASHER,LOCK (1) 435-10	

(1) ITEM NO	(2) SMR CODE	(3) NSN	(4) CAGEC	(5) PART NUMBER	(6) DESCRIPTION AND USABLE ON CODES(UOC)	(7) QTY
					WIRING HARNESS,BRAN(1) 435-4	

END OF FIGURE

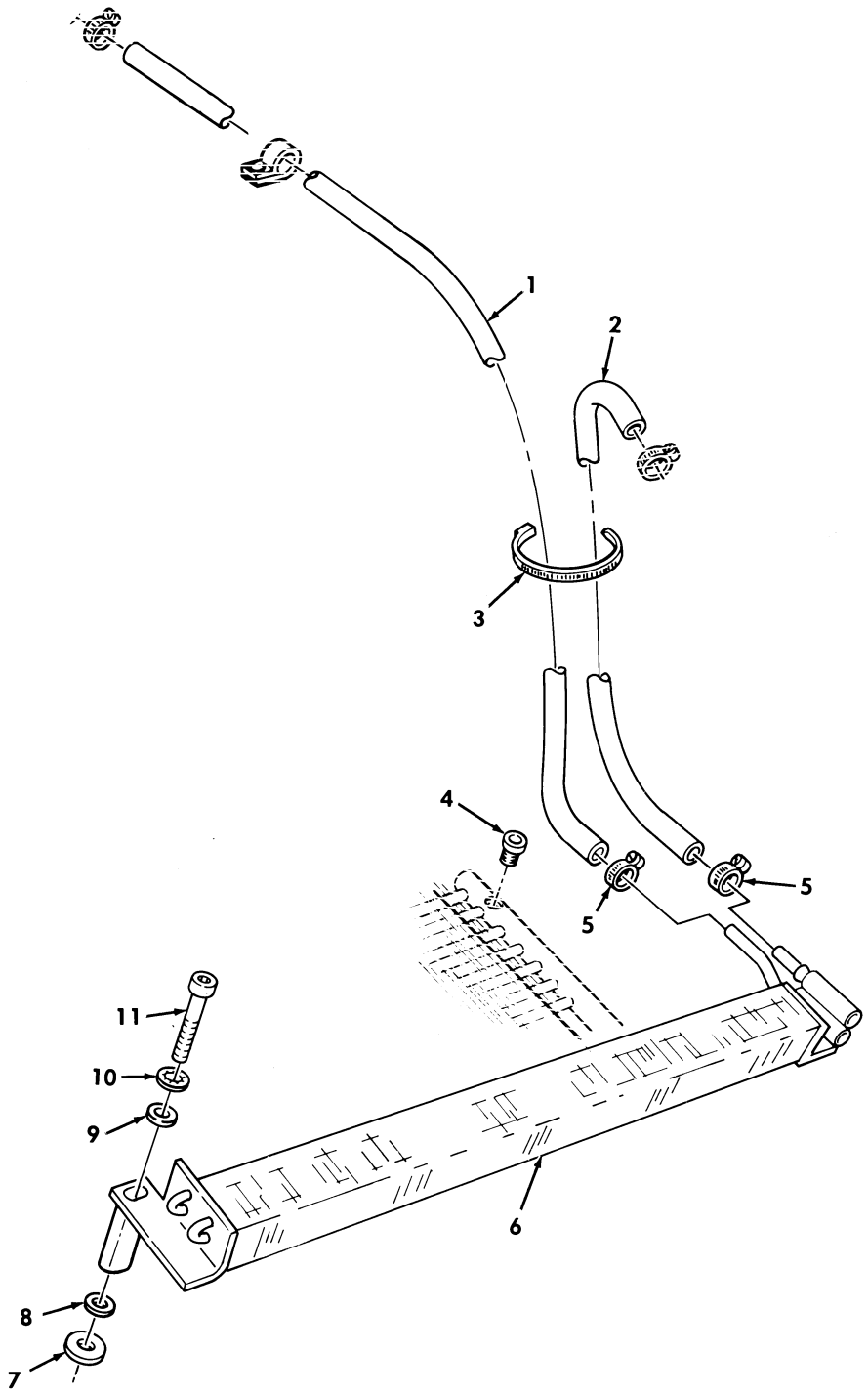

Figure 436. Power Steering Oil Cooler Kit.

(1) ITEM NO	(2) SMR CODE	(3) NSN	(4) CAGEC	(5) PART NUMBER	(6) DESCRIPTION AND USABLE ON CODES(UOC)	(7) QTY
					GROUP 3307 SPECIAL PURPOSE KITS	
					FIG. 436 POWER STEERING OIL COOLER KIT	
1	MOOZZ		19207	12338330-6	HOSE,NONMETALLIC MAKE FROM HOSE,P/N 6490610019,29 INCHES LONG,USBL EFF 1 THRU 99,999 PART OF KIT P/N 5705612. UOC:H11,H13,H14,H15,H16,H17,H18,H20, H21,H24,H25,H26,H27,H28,MMM	1
2	MOOZZ		19207	12338330-7	HOSE,NONMETALLIC MAKE FROM HOSE,P/N 6490610019,45 INCHES LONG,USBL EFF 1 THRU 99,999 PART OF KIT P/N 5705612..... UOC:H11,H13,H14,H15,H16,H17,H18,H20, H21,H24,H25,H26,H27,H28,MMM	1
3	PAOZZ	5975009856630	96906	MS3367-3-0	STRAP,TIEDOWN,ELECT USBL EFF 1 THRU 99,999 PART OF KIT P/N 5705612. UOC:H11,H13,H14,H15,H16,H17,H18,H20, H21,H24,H25,H26,H27,H28,MMM	1
4	PAOZZ	4730009541281	81348	WW-P-471ACABCB	PLUG,PIPE USBL EFF 1 THRU 99,999 PART OF KIT P/N 5705612..... UOC:H11,H13,H14,H15,H16,H17,H18,H20, H21,H24,H25,H26,H27,H28,MMM	1
5	PAOZZ	4730008776298	46717	L-3604-13	CLAMP,HOSE USBL EFF 1 THRU 99,999 PART OF KIT P/N 5705612..... UOC:H11,H13,H14,H15,H16,H17,H18,H20, H21,H24,H25,H26,H27,H28,MMM	2
6	PAOZZ	2520013162630	34623	12342142	COOLER,FLUID,TRANSM USBL EFF 1 THRU 99,999 PART OF KIT P/N 5705612. UOC:H11,H13,H14,H15,H16,H17,H18,H20, H21,H24,H25,H26,H27,H28,MMM	1
7	PAOZZ	5310011857214	19207	12339052	WASHER,FLAT 5/16,USBL EFF 1 THRU 99,999 PART OF KIT P/N 5705612..... UOC:H11,H13,H14,H15,H16,H17,H18,H20, H21,H24,H25,H26,H27,H28,MMM	2
8	PAOZZ	5310000877493	96906	MS27183-13	WASHER,FLAT 5/16,USBL EFF 1 THRU 99,999 PART OF KIT P/N 5705612..... UOC:H11,H13,H14,H15,H16,H17,H18,H20, H21,H24,H25,H26,H27,H28,MMM	2
9	PAOZZ	5310000814219	96906	MS27183-12	WASHER,FLAT 5/16,USBL EFF 1 THRU 99,999 PART OF KIT P/N 5705612..... UOC:H11,H13,H14,H15,H16,H17,H18,H20, H21,H24,H25,H26,H27,H28,MMM	2
10	PAOZZ	5310001670721	96906	MS35333-41	WASHER,LOCK 5/16,USBL EFF 1 THRU 99,999 PART OF KIT P/N 5705612..... UOC:H11,H13,H14,H15,H16,H17,H18,H20, H21,H24,H25,H26,H27,H28,MMM	2
11	PAOZZ	5305009226143	80205	MS16995-72	SCREW,CAP,SOCKET HE 5/16-18 X 2-1/2,USBL EFF 1 THRU 99,999 PART OF KIT P/N 5705612..... UOC:H11,H13,H14,H15,H16,H17,H18,H20, H21,H24,H25,H26,H27,H28,MMM	2

(1) ITEM NO	(2) SMR CODE	(3) NSN	(4) CAGEC	(5) PART NUMBER	(6) DESCRIPTION AND USABLE ON CODES(UOC)	(7) QTY
KIT	PDOZZ	2530013214497	19207	5705612	PARTS KIT,POWER STE ,POWER STEERING OIL COOLER USBL EFF 1 THRU 99,999.....	1
					UOC:H11,H13,H14,H15,H16,H17,H18,H20, H21,H24,H25,H26,H27,H28,MMM	
					CLAMP,HOSE (2) 436-5	
					COOLER,FLUID,TRANSM(1) 436-6	
					HOSE,NONMETALLIC (1) 436-1	
					HOSE,NONMETALLIC (1) 436-2	
					PLUG,PIPE (1) 436-4	
					SCREW,CAP,SOCKET HE(2) 436-11	
					STRAP,TIEDOWN,ELECT(1) 436-3	
					WASHER,FLAT (2) 436-7	
					WASHER,FLAT (2) 436-8	
					WASHER,FLAT (2) 436-9	
					WASHER,LOCK (2) 436-10	

END OF FIGURE

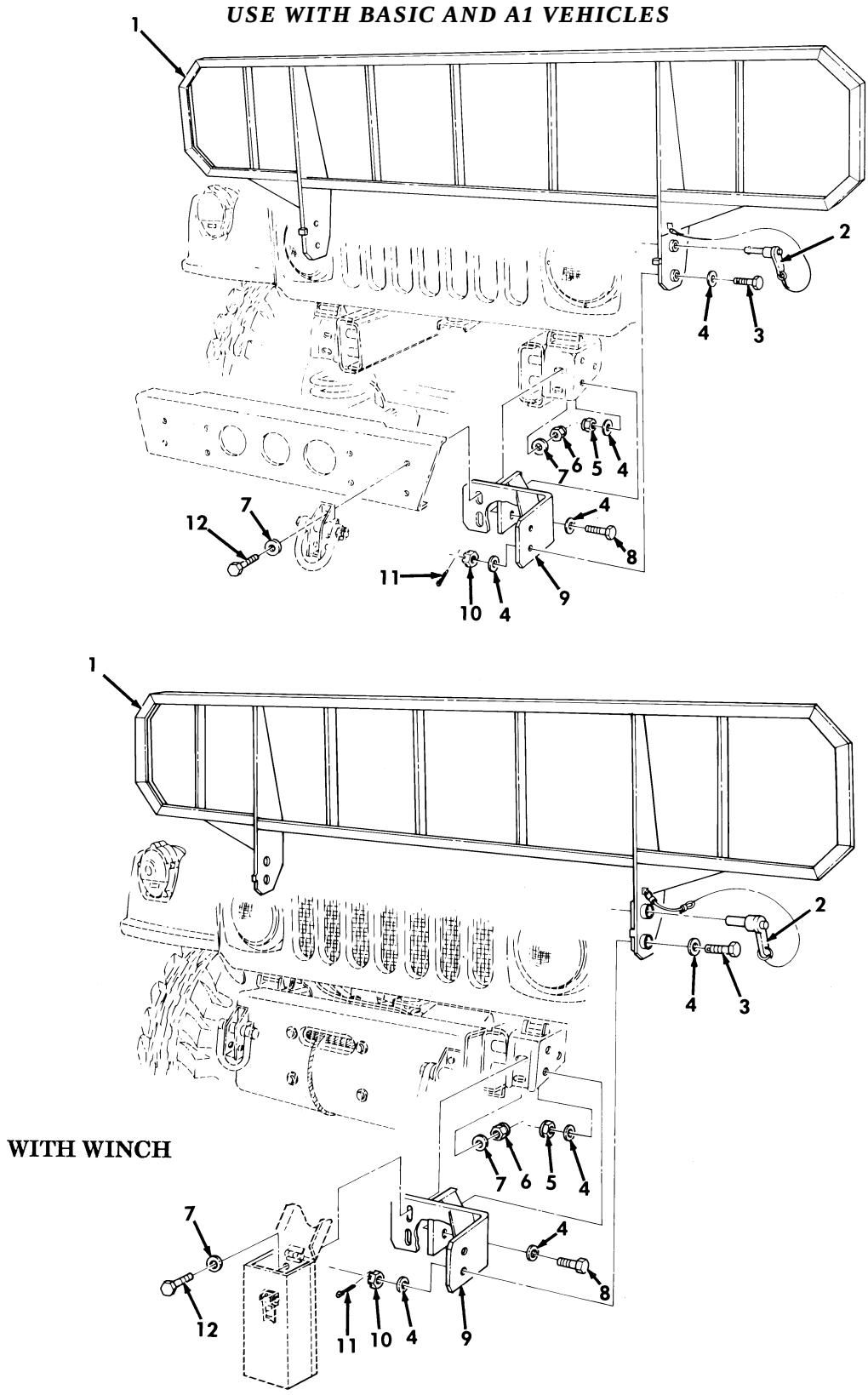

Figure 437. Brushguard Kit (Basic and A1 Series).

(1) ITEM NO	(2) SMR CODE	(3) NSN	(4) CAGEC	(5) PART NUMBER	(6) DESCRIPTION AND USABLE ON CODES(UOC)	(7) QTY
					GROUP 3307 SPECIAL PURPOSE KITS	
					FIG. 437 BRUSHGUARD KIT (BASIC AND A1 SERIES)	
1	KFOZZ		19207	12342412	BRUSHGUARD ASSEMBLY PART OF KIT P/N 57K0106..... UOC:AVY,A11,A13,A14,A15,A20,A24,A25, A26,A27,B16,B17,B18,HVY,H11,H13,H14, H15,H16,H17,H18,H20,H21,H24,H25,H26, H27,H28,MMM	1
2	PAOZZ	5315012490555	96906	MS17986-C1013	PIN,QUICK RELEASE PART OF KIT P/N 57K0106..... UOC:AVY,A11,A13,A14,A15,A20,A24,A25, A26,A27,B16,B17,B18,HVY,H11,H13,H14, H15,H16,H17,H18,H20,H21,H24,H25,H26, H27,H28,MMM	2
3	PAOZZ	5305013316284	96906	MS51108-139	SCREW,CAP,HEXAGON H 5/8-18 X 2.00 PART OF KIT P/N 57K0106..... UOC:AVY,A11,A13,A14,A15,A20,A24,A25, A26,A27,B16,B17,B18,HVY,H11,H13,H14, H15,H16,H17,H18,H20,H21,H24,H25,H26, H27,H28,MMM	2
4	PAOZZ	5310008238803	96906	MS27183-21	WASHER,FLAT 5/8 PART OF KIT P/N 57K0106..... UOC:AVY,A11,A13,A14,A15,A20,A24,A25, A26,A27,B16,B17,B18,HVY,H11,H13,H14, H15,H16,H17,H18,H20,H21,H24,H25,H26, H27,H28,MMM	12
5	PAOZZ	5310001986691	7X677	9422306	NUT,SELF-LOCKING,HE 5/8-18 PART OF KIT P/N 57K0106..... UOC:AVY,A11,A13,A14,A15,A20,A24,A25, A26,A27,B16,B17,B18,HVY,H11,H13,H14, H15,H16,H17,H18,H20,H21,H24,H25,H26, H27,H28,MMM	4
6	PAOZZ	5310000103028	96906	MS35690-824	NUT,PLAIN,HEXAGON 1/2-20 PART OF KIT P/N 57K0106..... UOC:AVY,A11,A13,A14,A15,A20,A24,A25, A26,A27,B16,B17,B18,HVY,H11,H13,H14, H15,H16,H17,H18,H20,H21,H24,H25,H26, H27,H28,MMM	4
7	PAOZZ	5310011211703	06032	2310-0143-001	WASHER,FLAT 1/2 PART OF KIT P/N 57K0106..... UOC:AVY,A11,A13,A14,A15,A20,A24,A25, A26,A27,B16,B17,B18,HVY,H11,H13,H14, H15,H16,H17,H18,H20,H21,H24,H25,H26, H27,H28,MMM	8
8	PAOZZ	5305007272283	96906	MS90726-162	SCREW,CAP,HEXAGON H 5/8-18 X 1 3/4 PART OF KIT P/N 57K0106..... UOC:AVY,A11,A13,A14,A15,A20,A24,A25, A26,A27,B16,B17,B18,HVY,H11,H13,H14, H15,H16,H17,H18,H20,H21,H24,H25,H26, H27,H28,MMM	4

(1) ITEM NO	(2) SMR CODE	(3) NSN	(4) CAGEC	(5) PART NUMBER	(6) DESCRIPTION AND USABLE ON CODES(UOC)	(7) QTY
9	PFOZZ	5340013327516	19207	12342418	BRACKET,MOUNTING PART OF KIT P/N 57K0106..... UOC:AVY,A11,A13,A14,A15,A20,A24,A25, A26,A27,B16,B17,B18,HVY,H11,H13,H14, H15,H16,H17,H18,H20,H21,H24,H25,H26, H27,H28,MMM	1
10	PAOZZ	5310008507004	96906	MS35692-54	NUT,PLAIN,SLOTTED,H 5/8-18 PART OF KIT P/N 57K0106..... UOC:AVY,A11,A13,A14,A15,A20,A24,A25, A26,A27,B16,B17,B18,HVY,H11,H13,H14, H15,H16,H17,H18,H20,H21,H24,H25,H26, H27,H28,MMM	2
11	PAOZZ	5315002981481	80205	MS24665-357	PIN,COTTER 5/64 X 2.00 PART OF KIT P/N 57K0106..... UOC:AVY,A11,A13,A14,A15,A20,A24,A25, A26,A27,B16,B17,B18,HVY,H11,H13,H14, H15,H16,H17,H18,H20,H21,H24,H25,H26, H27,H28,MMM	2
12	PAOZZ	5305007195235	24617	9423995	SCREW,CAP,HEXAGON H 1/2-20 X 1 3/4, WITH WINCH PART OF KIT P/N 57K0106.. UOC:AVY,A11,A13,A14,A15,A20,A24,A25, A26,A27,B16,B17,B18,HVY,H11,H13,H14, H15,H16,H17,H18,H20,H21,H24,H25,H26, H27,H28,MMM	4
12	PAOZZ	5305007195239	96906	MS90727-116	SCREW,CAP,HEXAGON H 1/2-20 X 2 1/4, WITHOUT WINCH PART OF KIT P/N 57K0106..... UOC:AVY,A11,A13,A14,A15,A20,A24,A25, A26,A27,B16,B17,B18,HVY,H11,H13,H14, H15,H16,H17,H18,H20,H21,H24,H25,H26, H27,H28,MMM	4
KIT	PDOZZ	2590013282904	19207	57K0106	MODIFICATION KIT,VE BRUSHGUARD..... UOC:AVY,A11,A13,A14,A15,A20,A24,A25, A26,A27,B16,B17,B18,HVY,H11,H13,H14, H15,H16,H17,H18,H20,H21,H24,H25,H26, H27,H28,MMM	1
					BRACKET,MOUNTING (1) 437-9	
					BRUSHGUARD ASSEMBLY(1) 437-1	
					NUT,PLAIN,HEXAGON (4) 437-6	
					NUT,PLAIN,SLOTTED (2) 437-10	
					NUT,SELF-LOCKING,HE(4) 437-5	
					PIN,COTTER (2) 437-11	
					PIN,QUICK RELEASE (2) 437-2	
					SCREW,CAP,HEXAGON H(2) 437-3	
					SCREW,CAP,HEXAGON H(4) 437-12	
					SCREW,CAP,HEXAGON H(4) 437-12	
					SCREW,CAP,HEXAGON H(4) 437-8	
					WASHER,FLAT (12) 437-4	
					WASHER,FLAT (8) 437-7	

END OF FIGURE

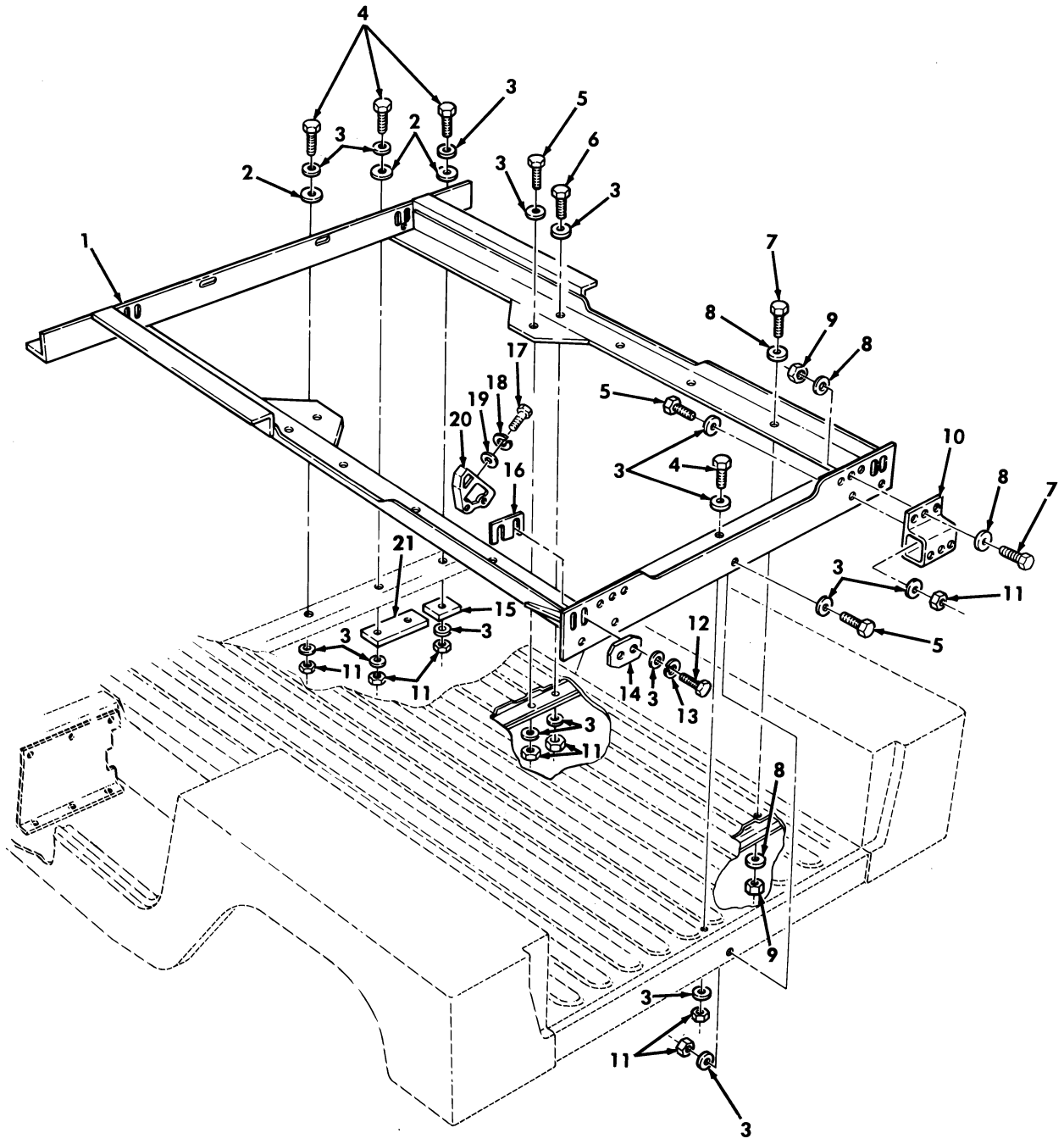

Figure 438. Kit, S250 Shelter Mounting Components.

(1) ITEM NO	(2) SMR CODE	(3) NSN	(4) CAGEC	(5) PART NUMBER	(6) DESCRIPTION AND USABLE ON CODES(UOC)	(7) QTY
					GROUP 3307 SPECIAL PURPOSE KITS	
					FIG. 438 KIT,S250 SHELTER MOUNTING COMPONENTS	
* 1	PAOZZ	2540012138057	19207	12339875	SUPPORT ASSEMBLY,MO PART OF KIT P/N 57K3542..... UOC:AVY,BVY,HVY,H21,H28,NNN	1
* 2	PAOZZ	5310012110698	19207	12339862-2	WASHER,FLAT PART OF KIT P/N 57K3542 UOC:AVY,BVY,HVY,H21,H28,NNN	8
* 3	PAOZZ	5310011211703	06032	2310-0143-001	WASHER,FLAT 1/2,PART OF KIT P/N 57K3542..... UOC:AVY,BVY,HVY,H21,H28,NNN	44
* 4	PAOZZ	5306013600926	3M915	17C836R	BOLT,MACHINE 1/2-13 X 1.50,PART OF KIT P/N 57K3542..... UOC:AVY,BVY,HVY,H21,H28,NNN	9
* 5	PAOZZ	5306008440036	7X677	427566	BOLT,MACHINE 1/2-13 X 2.25,PART OF KIT P/N 57K3542..... UOC:AVY,BVY,HVY,H21,H28,NNN	9
* 6	PAOZZ	5305000712070	80204	B1821BH050C175N	SCREW,CAP,HEXAGON 1/2-13 X 1.75 PART OF KIT P/N 57K3542..... UOC:AVY,BVY,HVY,H21,H28,NNN	5
* 7	PAOZZ	5305006882111	80204	B1821BH038C138N	SCREW,CAP,HEXAGON H 3/8-16 X 1.375,PART OF KIT P/N 57K3542..... UOC:AVY,BVY,HVY,H21,H28,NNN	10
* 8	PAOZZ	5310014124013	24617	2436163	WASHER,FLAT 3/8,PART OF KIT P/N 57K3542..... UOC:AVY,BVY,HVY,H21,H28,NNN	20
* 9	PAOZZ	5310013611152	24617	9413266	NUT,SELF-LOCKING,HE 3/8-16,PART OF KIT P/N 57K3542..... UOC:AVY,BVY,HVY,H21,H28,NNN	16
* 10	PAOZZ	5340012144675	19207	12338972	BRACKET,MOUNTING PART OF KIT P/N 57K3542..... UOC:AVY,BVY,HVY,H21,H28,NNN	2
* 11	PAOZZ	5310000200358	72962	21NE083	NUT,SELF-LOCKING,HE 1/2-13,PART OF KIT P/N 57K3542..... UOC:AVY,BVY,HVY,H21,H28,NNN	17
* 12	PAOZZ	5306012761621	34623	5597349	BOLT,SELF-LOCKING 1/2-13 X 2.50, PART OF KIT P/N 57K3542..... UOC:AVY,BVY,HVY,H21,H28,NNN	8
* 13	PAOZZ	5310008347606	96906	MS35340-48	WASHER,LOCK 1/2,PART OF KIT P/N 57K3542..... UOC:AVY,BVY,HVY,H21,H28,NNN	8
* 14	PAOZZ	5365012772387	19207	12341968	SPACER,PLATE PART OF KIT P/N 57K3542 UOC:AVY,BVY,HVY,H21,H28,NNN	4
* 15	PAOZZ	2590012131629	19207	12339857	PLATE,REINFORCEMENT PART OF KIT P/N 57K3542..... UOC:AVY,BVY,HVY,H21,H28,NNN	2
* 16	PAOZZ	5365012658937	19207	12341967-1	SPACER,PLATE 0.09,PART OF KIT P/N 57K3542..... UOC:AVY,BVY,HVY,H21,H28,NNN	2

(1) ITEM NO	(2) SMR CODE	(3) NSN	(4) CAGEC	(5) PART NUMBER	(6) DESCRIPTION AND USABLE ON CODES(UOC)	(7) QTY
* 16	PAOZZ	5365012658938	19207	12341967-2	SPACER,PLATE 0.12,PART OF KIT P/N 57K3542..... UOC:AVY,BVY,HVY,H21,H28,NNN	2
* 16	PAOZZ	5365012658939	19207	12341967-3	SPACER,PLATE 0.03,PART OF KIT P/N 57K3542..... UOC:AVY,BVY,HVY,H21,H28,NNN	2
* 17	PAOZZ	5306013601123	24617	9423557	BOLT,MACHINE 7/16-14 X 2.50,PART OF KIT P/N 57K3542..... UOC:AVY,BVY,HVY,H21,H28,NNN	4
* 18	PAOZZ	5310006559370	96906	MS35340-47	WASHER,LOCK 29/64,PART OF KIT P/N 57K3542..... UOC:AVY,BVY,HVY,H21,H28,NNN	4
* 19	PAOZZ	5310008094085	96906	MS27183-16	WASHER,FLAT 7/16,PART OF KIT P/N 57K3542..... UOC:AVY,BVY,HVY,H21,H28,NNN	4
* 20	PAOZZ	5340012658905	19207	12341969	BRACKET,MOUNTING PART OF KIT P/N 57K3542..... UOC:AVY,BVY,HVY,H21,H28,NNN	4
* 21	PAOZZ	2590012131628	19207	12339856	PLATE,REINFORCEMENT B-BEAM,PART OF KIT P/N 57K3542..... UOC:AVY,BVY,HVY,H21,H28,NNN	2

END OF FIGURE

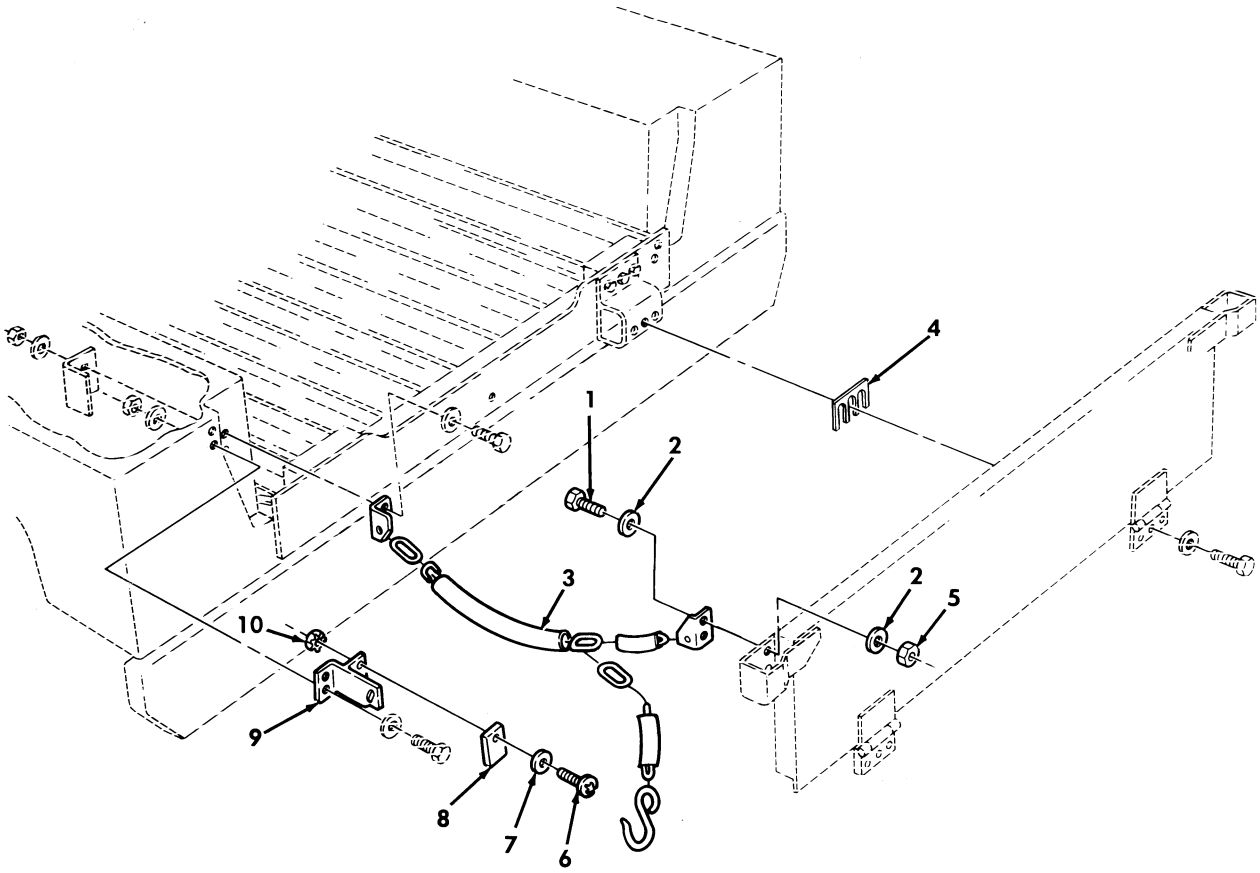

Figure 439. Kit, S250 Shelter Tailgate Mounting Components.

(1) ITEM NO	(2) SMR CODE	(3) NSN	(4) CAGEC	(5) PART NUMBER	(6) DESCRIPTION AND USABLE ON CODES(UOC)	(7) QTY
					GROUP 3307 SPECIAL PURPOSE KITS	
					FIG. 439 KIT,S250 SHELTER TAILGATE MOUNTING COMPONENTS	
* 1	PAOZZ	5306002264828	80204	B1821BH031C113N	BOLT,MACHINE 5/16-18 X 1.13,PART OF KIT P/N 57K3542..... UOC:AVY,BVY,HVY,NNN	4
* 2	PAOZZ	5310011191024	24617	2436162	WASHER,FLAT 5/16,PART OF KIT P/N 57K3542..... UOC:AVY,BVY,HVY,NNN	8
* 3	PAOZZ	4010012177086	34623	12339229-1	CHAIN ASSEMBLY,SING L.H.,PART OF KIT P/N 57K3542..... UOC:AVY,BVY,HVY,NNN	1
* 3	PAOZZ	4010012157466	19207	12339229-2	CHAIN ASSEMBLY,SING R.H.,PART OF KIT P/N 57K3542..... UOC:AVY,BVY,HVY,NNN	1
* 4	PAOZZ	5365012712491	19207	12340045	SPACER,PLATE PART OF KIT P/N 57K3542..... UOC:AVY,BVY,HVY,NNN	2
* 5	PAOZZ	5310011193668	24617	9422295	NUT,SELF-LOCKING,HE 5/16-18,PART OF KIT P/N 57K3542..... UOC:AVY,BVY,HVY,NNN	4
* 6	PAOZZ	5305009846212	96906	MS35206-265	SCREW,MACHINE #10-24 X 0.75,PART OF KIT P/N 57K3542..... UOC:AVY,BVY,HVY,NNN	4
* 7	PAOZZ	5310013611163	24617	9417373	WASHER,FLAT #10,PART OF KIT P/N 57K3542..... UOC:AVY,BVY,HVY,NNN	4
* 8	PAOZZ	5342012147809	19207	12338976	MOUNTING,RESILIENT PART OF KIT P/N 57K3542..... UOC:AVY,BVY,HVY,NNN	2
* 9	PAOZZ	2540013141121	34623	5590669	LATCH,DOOR,VEHICULA L.H.,PART OF KIT P/N 57K3542..... UOC:AVY,BVY,HVY,NNN	1
* 9	PAOZZ	2540012096875	19207	12338978-2	LATCH,DOOR,VEHICULA R.H.,PART OF KIT P/N 57K3542..... UOC:AVY,BVY,HVY,NNN	1
* 10	PAOZZ	5310012110691	24617	9422771	NUT,PLAIN,ASSEMBLED #10-24,PART OF KIT P/N 57K3542..... UOC:AVY,BVY,HVY,NNN	4
*KIT	PAOZZ	5340014558700	19207	57K3542	HARDWARE KIT,MECHAN S250 SHELTER MOUNTING..... UOC:AVY,BVY,HVY,NNN	1
					BOLT,MACHINE (9) 438-4	
					BOLT,MACHINE (9) 438-5	
					BOLT,MACHINE (4) 439-1	
					BOLT,MACHINE (4) 438-17	
					BOLT,SELF-LOCKING (8) 438-12	
					BRACKET,MOUNTING (2) 438-10	
					BRACKET,MOUNTING (4) 438-20	
					CHAIN ASSEMBLY,SING(1) 439-3	
					CHAIN ASSEMBLY,SING(1) 439-3	

(1) ITEM NO	(2) SMR CODE	(3) NSN	(4) CAGEC	(5) PART NUMBER	(6) DESCRIPTION AND USABLE ON CODES(UOC)	(7) QTY
					LATCH,DOOR,VEHICULA(1)	439-9
					LATCH,DOOR,VEHICULA(1)	439-9
					MOUNT,RESILIENT (2)	439-8
					NUT,PLAIN,ASSEMBLED(4)	439-10
					NUT,SELF-LOCKING (4)	439-5
					NUT,SELF-LOCKING,HE(16)	438-9
					NUT,SELF-LOCKING,HE(17)	438-11
					PLATE,REINFORCEMENT(2)	438-15
					PLATE,REINFORCEMENT(2)	438-21
					SCREW,CAP,HEXAGON (10)	438-7
					SCREW,MACHINE (5)	438-6
					SCREW,MACHINE (4)	439-6
					SPACER,PLATE (4)	438-14
					SPACER,PLATE (2)	438-16
					SPACER,PLATE (2)	438-16
					SPACER,PLATE (2)	438-16
					SPACER,PLATE (2)	439-4
					SUPPORT ASSEMBLY,MO(1)	438-1
					WASHER,FLAT (8)	438-2
					WASHER,FLAT (44)	438-3
					WASHER,FLAT (20)	438-8
					WASHER,FLAT (4)	438-19
					WASHER,FLAT (8)	439-2
					WASHER,FLAT (4)	439-7
					WASHER,LOCK (8)	438-13
					WASHER,LOCK (4)	438-18

END OF FIGURE

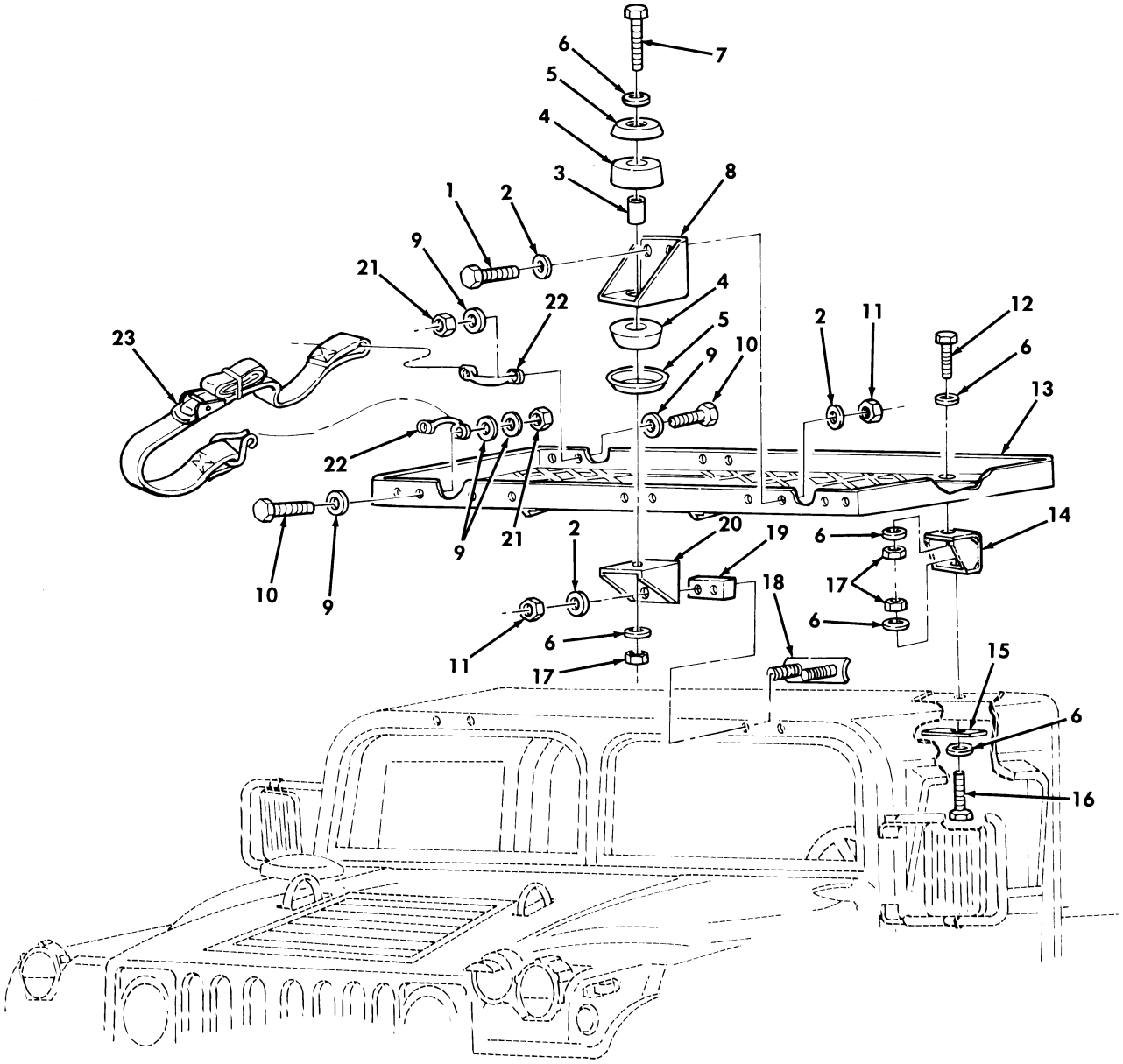

Figure 440. Kit, Camouflage Rack and Stowage Rack Assembly.

(1) ITEM NO	(2) SMR CODE	(3) NSN	(4) CAGEC	(5) PART NUMBER	(6) DESCRIPTION AND USABLE ON CODES(UOC)	(7) QTY
					GROUP 3307 SPECIAL PURPOSE KITS	
					FIG. 440 KIT,CAMOUFLAGE RACK AND STOWAGE RACK ASSEMBLY	
* 1	PAOZZ	5306002264825	29510	25228R1	BOLT,MACHINE 5/16-18 X .75,PART OF KIT P/N 57K1641..... UOC:HPM,KTV	4
2	PAOZZ	5310011191024	24617	2436162	WASHER,FLAT 5/16,PART OF KIT P/N 57K1641..... UOC:HPM,KTV	12
3	PAOZZ	5365012160364	19207	12338186-52	SPACER,SLEEVE PART OF KIT P/N 57K1641..... UOC:HPM,KTV	2
* 4	PAOZZ	5340012110838	34623	5584891	MOUNT,RESILIENT UPPER AND LOWER, PART OF KIT P/N 57K1641..... UOC:HPM,KTV	4
5	PAOZZ	2540011925949	19207	12339561	PLATE,SNUBBER,VEHIC PART OF KIT P/N 57K1641..... UOC:HPM,KTV	4
6	PAOZZ	5310000806004	96906	MS27183-14	WASHER,FLAT 3/8,PART OF KIT P/N 57K1641..... UOC:HPM,KTV	12
7	PAOZZ	5306013601129	24617	427583	BOLT,MACHINE 3/8-16 X 3.25,PART OF KIT P/N 57K1641..... UOC:HPM,KTV	2
8	PAOZZ	5340013599474	19207	12342559	BRACKET,MOUNTING UPPER FRONT,PART OF KIT P/N 57K1641..... UOC:HPM,KTV	2
9	PAOZZ	5310011023270	24617	2436161	WASHER,FLAT 1/4,PART OF KIT P/N 57K1641..... UOC:HPM,KTV	30
10	PAOZZ	5305000680502	96906	MS90725-6	SCREW,CAP,HEXAGON H 1/4-20 X .75, PART OF KIT P/N 57K1641..... UOC:HPM,KTV	12
11	PAOZZ	5310008140673	96906	MS51943-33	NUT,SELF-LOCKING,HE 5/16-18,PART OF KIT P/N 57K1641..... UOC:HPM,KTV	8
12	PAOZZ	5305009890830	72582	186678	SCREW,CAP,HEXAGON H 3/8-16 X 1.00, PART OF KIT P/N 57K1641..... UOC:HPM,KTV	2
13	PAOZZ	2540013875578	19207	12342558	RACK ASSEMBLY PART OF KIT P/N 57K1641..... UOC:HPM,KTV	1
14	PAOZZ	5340013602053	19207	12342561	BRACKET,MOUNTING REAR,PART OF KIT P/N 57K1641..... UOC:HPM,KTV	2
15	PAOZZ	5340013602021	19207	12342666	PLATE,MOUNTING PART OF KIT P/N 57K1641..... UOC:HPM,KTV	2
16	PAOZZ	5306013601130	24617	456958	BOLT,MACHINE 3/8-16 X 4.00,PART OF KIT P/N 57K1641..... UOC:HPM,KTV	2

(1) ITEM NO	(2) SMR CODE	(3) NSN	(4) CAGEC	(5) PART NUMBER	(6) DESCRIPTION AND USABLE ON CODES(UOC)	(7) QTY
17	PAOZZ	5310009359021	96906	MS51943-35	NUT,SELF-LOCKING,HE 3/8-16,PART OF KIT P/N 57K1641..... UOC:HPM,KTV	6
18	PAOZZ	5340013611212	19207	12342623	BRACKET,DOUBLE ANGL PART OF KIT P/N 57K1641..... UOC:HPM,KTV	2
19	PAOZZ	5365013599406	19207	12342557	SPACER,STRAIGHT PART OF KIT P/N 57K1641..... UOC:HPM,KTV	2
20	PAOZZ	5340013598933	19207	12342560	BRACKET,ANGLE LOWER FRONT,PART OF KIT P/N 57K1641..... UOC:HPM,KTV	2
21	PAOZZ	5310000614650	96906	MS51943-31	NUT,SELF-LOCKING,HE 1/4-20,PART OF KIT P/N 57K1641..... UOC:HPM,KTV	12
22	PAOZZ	5340011978674	19207	12338839-6	HANDLE,BOW PART OF KIT P/N 57K1641. UOC:HPM,KTV	6
23	PAOZZ	5340013601886	19207	12342562	STRAP,RETAINING PART OF KIT P/N 57K1641..... UOC:HPM,KTV	3
KIT	KFOZZ		19207	57K1641	KIT,CAMOUFLAGE RACK ASSEMBLY PART OF KIT P/N 57K1628 PART OF KIT P/N 57K0235..... UOC:HPM,KTV	1
					BOLT,MACHINE (4) 440-1	
					BOLT,MACHINE (2) 440-7	
					BOLT,MACHINE (2) 440-16	
					BRACKET,ANGLE (2) 440-20	
					BRACKET,DOUBLE ANGL(2) 440-18	
					BRACKET,MOUNTING (2) 440-8	
					BRACKET,MOUNTING (2) 440-14	
					HANDLE,BOW (6) 440-22	
					MOUNT,RESILIENT (4) 440-4	
					NUT,SELF-LOCKING,HE(8) 440-11	
					NUT,SELF-LOCKING,HE(6) 440-17	
					NUT,SELF-LOCKING,HE(12) 440-21	
					PLATE,MOUNTING (2) 440-15	
					PLATE,SNUBBER,VEHIC(4) 440-5	
					RACK ASSEMBLY (1) 440-13	
					SCREW,CAP,HEXAGON H(12) 440-10	
					SCREW,CAP,HEXAGON H(2) 440-12	
					SPACER,SLEEVE (2) 440-3	
					SPACER,STRAIGHT (2) 440-19	
					STRAP,RETAINING (3) 440-23	
					WASHER,FLAT (12) 440-2	
					WASHER,FLAT (12) 440-6	
					WASHER,FLAT (30) 440-9	

END OF FIGURE

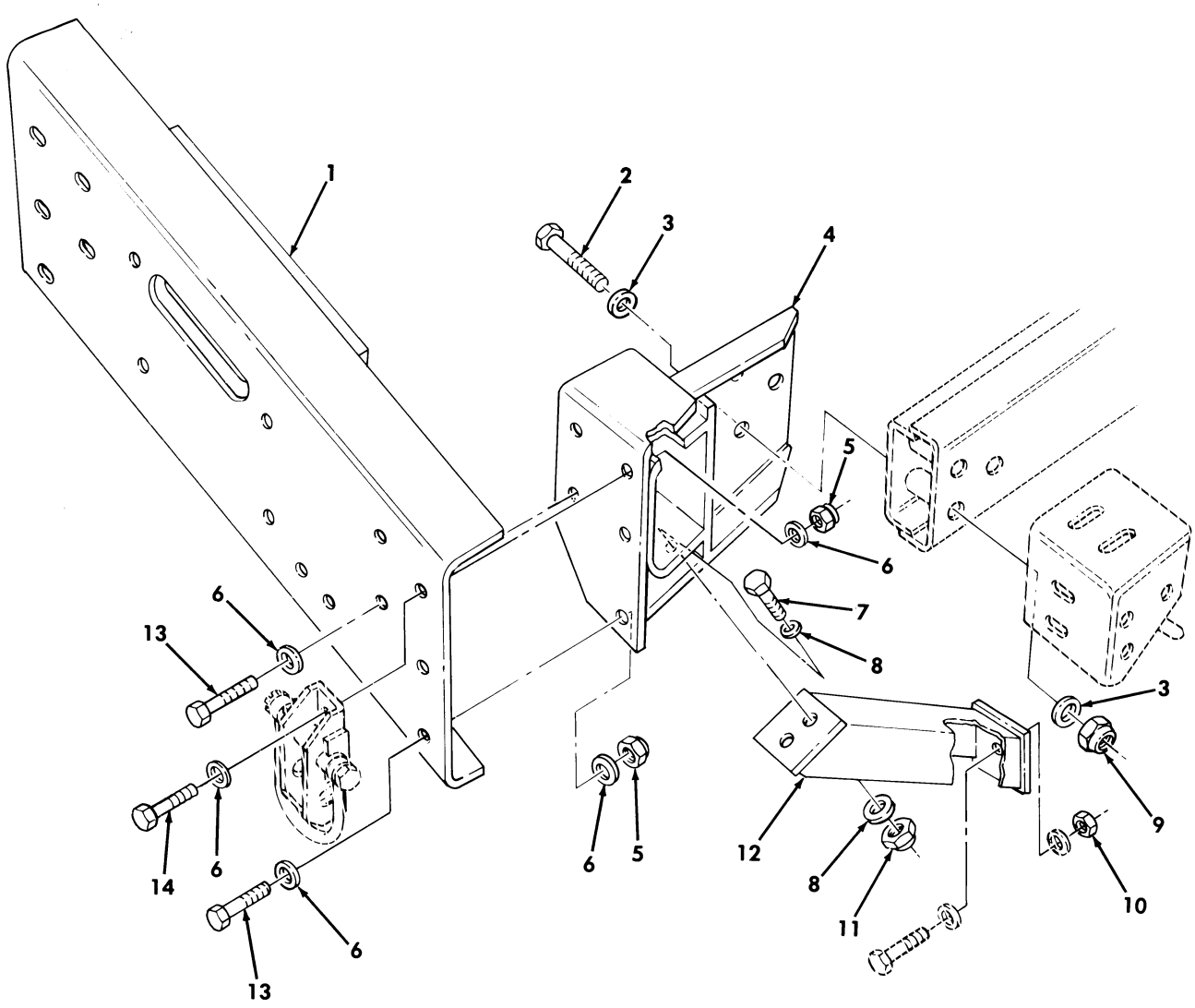

Figure 441. Kit, Prime Mover, Lt. Howitzer, 105 MM L119, Front Bumper.

(1) ITEM NO	(2) SMR CODE	(3) NSN	(4) CAGEC	(5) PART NUMBER	(6) DESCRIPTION AND USABLE ON CODES(UOC)	(7) QTY
					GROUP 3307 SPECIAL PURPOSE KITS	
					FIG. 441 KIT,PRIME MOVER,LT. HOWITZER,105 MM L119,FRONT BUMPER	
1	PAOZZ	2540013618206	19207	12342395	BUMPER,VEHICULAR PART OF KIT P/N 57K1628..... UOC:HPM	1
2	PAOZZ	5305011112774	24617	9428039	SCREW,CAP,HEXAGON H 5/8-11 X 3.75, PART OF KIT P/N 57K1628..... UOC:HPM	6
3	PAOZZ	5310011517347	24617	2436167	WASHER,FLAT 5/8,PART OF KIT P/N 57K1628..... UOC:HPM	12
4	PFOZZ	2510013581178	19207	12342387	FRAME SECTION,STRU L.H.,PART OF KIT P/N 57K1628..... UOC:HPM	1
4	PFOZZ	2510013578789	19207	12342388	FRAME SECTION,STRU R.H.,PART OF KIT P/N 57K1628..... UOC:HPM	1
5	PAOZZ	5310004883889	96906	MS51943-39	NUT,SELF-LOCKING,HE 1/2-13,PART OF KIT P/N 57K1628..... UOC:HPM	10
* 6	PAOZZ	5310011211703	06032	2310-0143-001	WASHER,FLAT 1/2,PART OF KIT P/N 57K1628..... UOC:HPM	16
* 7	PAOZZ	5305011044846	24617	9427321	SCREW,CAP,HEXAGON H 3/8-16 X 1/8, PART OF KIT P/N 57K1628..... UOC:HPM	4
8	PAOZZ	5310000806004	96906	MS27183-14	WASHER,FLAT 3/8,PART OF KIT P/N 57K1628..... UOC:HPM	8
9	PAOZZ	5310000614651	96906	MS51943-43	NUT,SELF-LOCKING,HE 5/8-11,PART OF KIT P/N 57K1628..... UOC:HPM	6
10	PAOZZ	5310004093333	96906	MS51943-45	NUT,PLAIN,HEXAGON 3/4-10,PART OF KIT P/N 57K1628..... UOC:HPM	2
11	PAOZZ	5310009359021	96906	MS51943-35	NUT,SELF-LOCKING,HE 3/8-16,PART OF KIT P/N 57K1628..... UOC:HPM	4
12	PFOZZ	2510013581176	19207	12342389	FRAME SECTION,STRU L.H.,PART OF KIT P/N 57K1628..... UOC:HPM	1
12	PFOZZ	2510013581177	19207	12342390	FRAME SECTION,STRU R.H.,PART OF KIT P/N 57K1628..... UOC:HPM	1
13	PAOZZ	5306013601125	24617	455000	BOLT,MACHINE 1/2-13 X 1.25,PART OF KIT P/N 57K1628..... UOC:HPM	6
14	PAOZZ	5305000712070	80204	B1821BH050C175N	SCREW,CAP,HEXAGON H 1/2-13 X 1.75, PART OF KIT P/N 57K1628..... UOC:HPM	4

END OF FIGURE

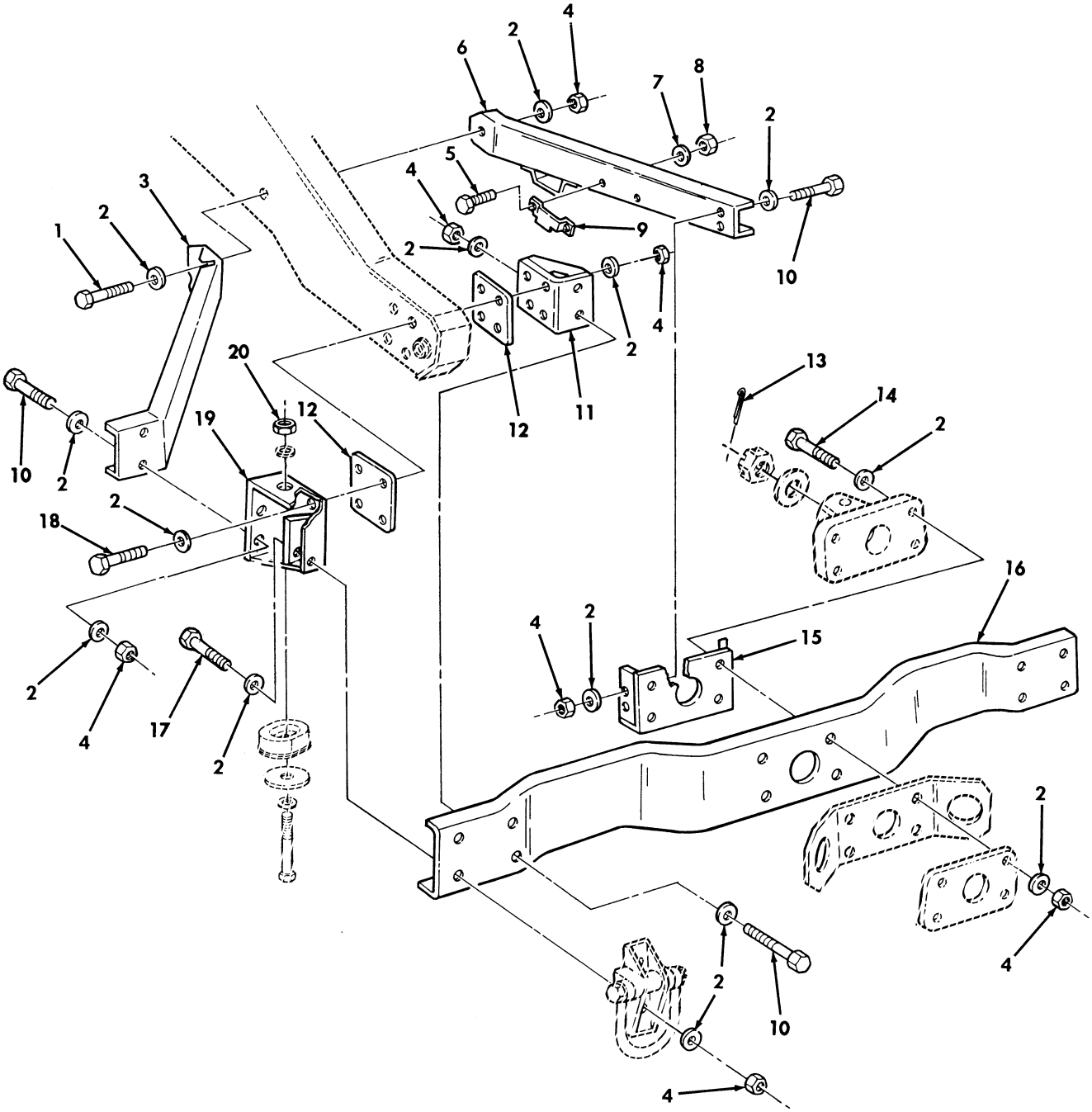

Figure 442. Kit, Prime Mover, Lt. Howitzer, 105 MM L119, Rear Bumper.

(1) ITEM NO	(2) SMR CODE	(3) NSN	(4) CAGEC	(5) PART NUMBER	(6) DESCRIPTION AND USABLE ON CODES(UOC)	(7) QTY
					GROUP 3307 SPECIAL PURPOSE KITS	
					FIG. 442 KIT,PRIME MOVER,LT. HOWITZER,105 MM L119,REAR BUMPER	
1	PAOZZ	5306013601128	24617	455006	BOLT,MACHINE 1/2-13 X 3.75,PART OF KIT P/N 57K1628..... UOC:HPM	2
* 2	PAOZZ	5310011211703	06032	2310-0143-001	WASHER,FLAT 1/2,PART OF KIT P/N 57K1628..... UOC:HPM	60
* 3	PAOZZ	2590013618087	34623	12342522	BRACKET,VEHICULAR REAR BUMPER, OUTER,L.H.,PART OF KIT P/N 57K1628.. UOC:HPM	1
3	PAOZZ	2590013618088	19207	12342540	BRACKET,VEHICULAR REAR BUMPER, OUTER,R.H.,PART OF KIT P/N 57K1628.. UOC:HPM	1
4	PAOZZ	5310004883889	96906	MS51943-39	NUT,SELF-LOCKING,HE 1/2-13,PART OF KIT P/N 57K1628..... UOC:HPM	30
5	PAOZZ	5305011858674	24617	9421294	SCREW,CAP,HEXAGON H #10-24 X 1/2, PART OF KIT P/N 57K1628..... UOC:HPM	4
6	PAOZZ	2590013605414	19207	12342516	BRACKET,VEHICULAR C REAR BUMPER, INNER,L.H.,PART OF KIT P/N 57K1628.. UOC:HPM	1
6	PAOZZ	2590013605413	19207	12342517	BRACKET,VEHICULAR C REAR BUMPER, INNER,R.H.,PART OF KIT P/N 57K1628.. UOC:HPM	1
7	PAOZZ	5310000453296	96906	MS35338-43	WASHER,LOCK #10,PART OF KIT P/N 57K1628..... UOC:HPM	4
8	PAOZZ	5310007349758	96906	MS35649-202	NUT,PLAIN,HEXAGON #10-24,PART OF KIT P/N 57K1628..... UOC:HPM	4
9	PAOZZ	2590013609537	19207	12342539	BRACKET,VEHICULAR C PART OF KIT P/N 57K1628..... UOC:HPM	2
10	PAOZZ	5306013601125	24617	455000	BOLT,MACHINE 1/2-13 X 1.25,PART OF KIT P/N 57K1628..... UOC:HPM	12
11	PAOZZ	2590013605412	19207	12342520	BRACKET,VEHICULAR C REAR BUMPER MOUNT,INNER,L.H.,PART OF KIT P/N 57K1628..... UOC:HPM	1
11	PAOZZ	2590013609536	19207	12342521	BRACKET,VEHICULAR C REAR BUMPER MOUNT,INNER,R.H.,PART OF KIT P/N 57K1628..... UOC:HPM	1
12	PAOZZ	5340013602020	19207	12342750	PLATE,MOUNTING PART OF KIT P/N 57K1628..... UOC:HPM	4
13	PAOZZ	5315008460126	96906	MS24665-628	PIN,COTTER 1/4 X 3.00,PART OF KIT	1

(1) ITEM NO	(2) SMR CODE	(3) NSN	(4) CAGEC	(5) PART NUMBER	(6) DESCRIPTION AND USABLE ON CODES(UOC)	(7) QTY
					P/N 57K1628..... UOC:HPM	
14	PAOZZ	5306013601126	24617	455002	BOLT,MACHINE 1/2-13 X 2.50,PART OF KIT P/N 57K1628..... UOC:HPM	4
15	PAOZZ	2590013641534	19207	12342523	BRACKET,VEHICULAR PART OF KIT P/N 57K1628..... UOC:HPM	1
16	PFOZZ	2540013602482	19207	12342515	BUMPER,VEHICULAR REAR,PART OF KIT P/N 57K1628..... UOC:HPM	1
17	PAOZZ	5306013601127	24617	455004	BOLT,MACHINE 1/2-13 X 3.00,PART OF KIT P/N 57K1628..... UOC:HPM	4
18	PAOZZ	5306011865369	7X677	9415560	BOLT,MACHINE 1/2-13 X 3.00,PART OF KIT P/N 57K1628..... UOC:HPM	8
19	PFOZZ	2590013605411	19207	12342518	BRACKET,VEHICULAR C REAR BUMPER MOUNT,OUTER,L.H.,PART OF KIT P/N 57K1628..... UOC:HPM	1
19	PFOZZ	2590013632084	19207	12342519	BRACKET,VEHICULAR C REAR BUMPER MOUNT,OUTER,R.H.,PART OF KIT P/N 57K1628..... UOC:HPM	1
20	PAOZZ	5310000614651	96906	MS51943-43	NUT,SELF-LOCKING 5/8-11,PART OF KIT P/N 57K1628..... UOC:HPM	2

END OF FIGURE

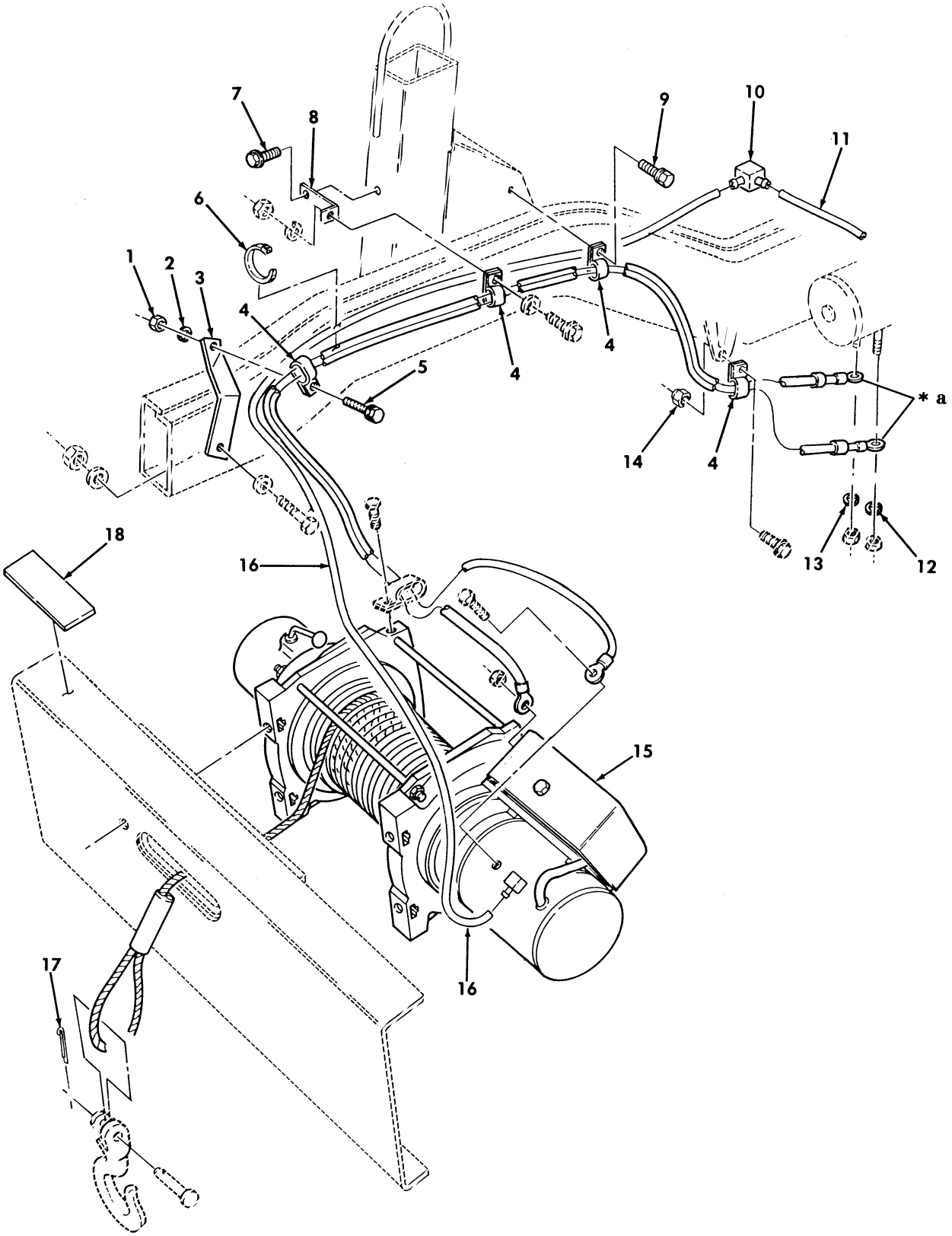

* a PART OF ITEM 15

Figure 443. Kit, Prime Mover, Lt. Howitzer, 105 MM L119, Winch.

(1) ITEM NO	(2) SMR CODE	(3) NSN	(4) CAGEC	(5) PART NUMBER	(6) DESCRIPTION AND USABLE ON CODES(UOC)	(7) QTY
					GROUP 3307 SPECIAL PURPOSE KITS	
					FIG. 443 KIT,PRIME MOVER,LT. HOWITZER,105 MM L119,WINCH	
1	PAOZZ	5310009050762	96906	MS51967-3	NUT,PLAIN,HEXAGON 1/4-20,PART OF KIT P/N 57K1628..... UOC:HPM	2
2	PAOZZ	5310005825965	96906	MS35338-44	WASHER,LOCK 1/4,PART OF KIT P/N 57K1628..... UOC:HPM	2
3	PFOZZ	5340012669173	19207	12338481	BRACKET,DOUBLE ANGL PART OF KIT P/N 57K1628..... UOC:HPM	1
4	PAOZZ	5340004381833	19207	7721654	CLAMP,LOOP PART OF KIT P/N 57K1628. UOC:HPM	4
5	PAOZZ	5305004890743	24617	9415477	SCREW,MACHINE 1/4-20 X 0.75,PART OF KIT P/N 57K1628..... UOC:HPM	2
6	PAOZZ	5975012055379	96906	MS3367-7	STRAP,TIEDOWN,ELECT PART OF KIT P/N 57K1628..... UOC:HPM	4
7	PAOZZ	5305011013312	96906	MS51851-126	SCREW,TAPPING 3/8-16 X 0.75,PART OF KIT P/N 57K1628..... UOC:HPM	1
8	PAOZZ	5340011922256	19207	12338663	BRACKET PART OF KIT P/N 57K1628.... UOC:HPM	1
9	PAOZZ	5305001913640	96906	MS51851-85	SCREW,TAPPING 1/4-20 X 0.62,PART OF KIT P/N 57K1628..... UOC:HPM	1
10	PAOZZ	4730010035105	79470	1064X4	TEE,HOSE PART OF KIT P/N 57K1628... UOC:HPM	1
11	MOOZZ		19207	CPR104420-1-2	TUBING,NONMETALLIC MAKE FROM TUBE, P/N CPR104420-1,2 INCHES LONG,PART OF KIT P/N 57K1628..... UOC:HPM	1
12	PAOZZ	5310006379541	96906	MS35338-46	WASHER,LOCK 3/8,PART OF KIT P/N 57K1628..... UOC:HPM	1
13	PAOZZ	5310012167390	96906	MS51415-9	WASHER,LOCK 1/2,PART OF KIT P/N 57K1628..... UOC:HPM	1
14	PAOZZ	5310011520598	24617	271172	NUT,SELF-LOCKING,AS PART OF KIT P/N 57K1628..... UOC:HPM	1
15	PAOFF	2590011797602	19207	12339723	WINCH,DRUM PART OF KIT P/N 57K1628. UOC:HPM	1
16	MOOZZ		19207	CPR104420-1-70	TUBING,NONMETALLIC MAKE FROM TUBE, P/N CPR104420-1,70 INCHES LONG,PART OF KIT P/N 57K1628..... UOC:HPM	1
17	PAOZZ	5315008395822	96906	MS24665-353	PIN,COTTER 0.120 X 1.13,PART OF KIT P/N 57K1628.....	1

(1) ITEM NO	(2) SMR CODE	(3) NSN	(4) CAGEC	(5) PART NUMBER	(6) DESCRIPTION AND USABLE ON CODES(UOC)	(7) QTY
					UOC:HPM	
18	PAOZZ	7690012646536	19207	12340923	DECAL PART OF KIT P/N 57K1628.....	1
					UOC:HPM	

END OF FIGURE

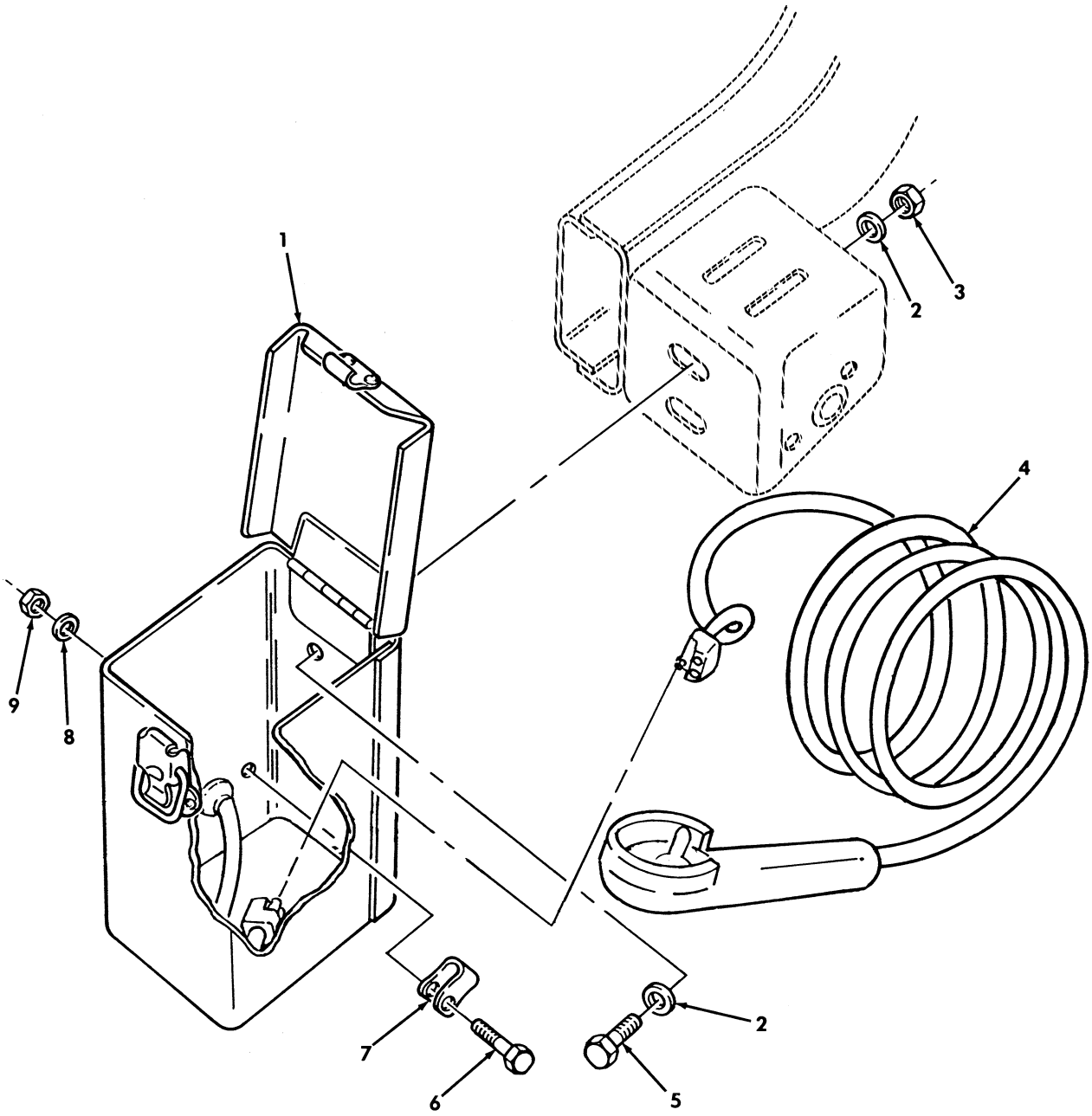

Figure 444. Kit, Prime Mover, Lt. Howitzer, 105 MM L119, Winch Control and Storage Box.

(1) ITEM NO	(2) SMR CODE	(3) NSN	(4) CAGEC	(5) PART NUMBER	(6) DESCRIPTION AND USABLE ON CODES(UOC)	(7) QTY
					GROUP 3307 SPECIAL PURPOSE KITS	
					FIG. 444 KIT,PRIME MOVER,LT. HOWITZER,105 MM L119,WINCH CONTROL AND STORAGE BOX	
1	PAOZZ	2540012096838	19207	12338489-1	BOX ACCESSORIES STO PART OF KIT P/N 57K1628..... UOC:HPM	1
2	PAOZZ	5310011211703	24617	2436165	WASHER,FLAT 1/2,PART OF KIT P/N 57K1628..... UOC:HPM	4
3	PAOZZ	5310004883889	96906	MS51943-39	NUT,SELF-LOCKING 1/2-13,PART OF KIT P/N 57K1628..... UOC:HPM	2
4	PAOZZ	2590012141566	19207	12338495	CONTROL HANDLE PART OF KIT P/N 57K1628..... UOC:HPM	1
5	PAOZZ	5306008440036	7X677	427566	BOLT,MACHINE 1/2-13 X 1.50,PART OF KIT P/N 57K1628..... UOC:HPM	2
6	PAOZZ	5305004890743	24617	9415477	SCREW,MACHINE 1/4-20 X .750,PART OF KIT P/N 57K1628..... UOC:HPM	1
7	PAOZZ	5340008091492	96906	MS21333-100	CLAMP,LOOP PART OF KIT P/N 57K1628. UOC:HPM	1
8	PAOZZ	5310005825965	96906	MS35338-44	WASHER,LOCK 1/4,PART OF KIT P/N 57K1628..... UOC:HPM	1
9	PAOZZ	5310009050762	96906	MS51967-3	NUT,PLAIN,HEXAGON 1/4-20,PART OF KIT P/N 57K1628..... UOC:HPM	1

END OF FIGURE

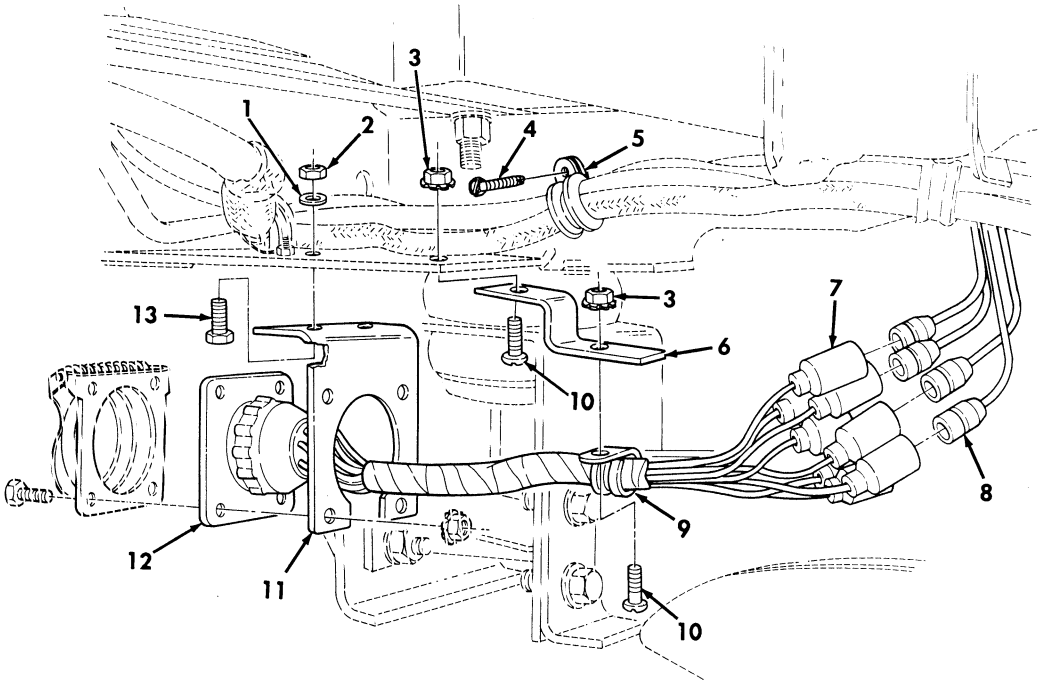

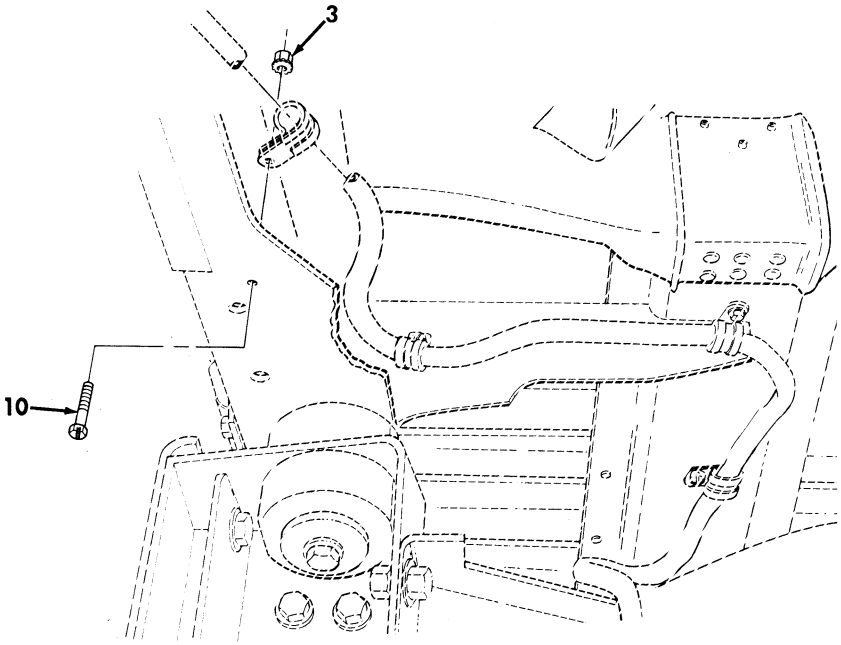

Figure 445. Kit, Prime Mover, Lt. Howitzer, 105 MM L119, Trailer Receptacle and Body Wiring Harness.

(1) ITEM NO	(2) SMR CODE	(3) NSN	(4) CAGEC	(5) PART NUMBER	(6) DESCRIPTION AND USABLE ON CODES(UOC)	(7) QTY
					GROUP 3307 SPECIAL PURPOSE KITS	
					FIG. 445 KIT,PRIME MOVER,LT. HOWITZER,105 MM L119,TRAILER RECEPTACLE AND BODY WIRING HARNESS	
1	PAOZZ	5310011191024	24617	2436162	WASHER,FLAT 5/16,PART OF KIT P/N 57K1628..... UOC:HPM	2
2	PAOZZ	5310008140673	96906	MS51943-33	NUT,SELF-LOCKING 5/16-18,PART OF KIT P/N 57K1628..... UOC:HPM	2
3	PAOZZ	5310001249265	24617	271169	NUT,PLAIN ASSEMBLED #10-32,PART OF KIT P/N 57K1628..... UOC:HPM	3
4	PAOZZ	5305012854234	24617	9414241	BOLT,ASSEMBLED WASH #10-32 X .62, PART OF KIT P/N 57K1628..... UOC:HPM	1
5	PAOZZ	5340009899222	96906	MS21333-74	CLAMP,LOOP PART OF KIT P/N 57K1628. UOC:HPM	1
6	PAOZZ	5340013601189	19207	12342668	BRACKET,DOUBLE ANGL PART OF KIT P/N 57K1628..... UOC:HPM	1
7	PAOZZ	5935004626603	96906	MS27142-2	CONNECTOR,PLUG,ELEC PART OF KIT P/N 57K1628..... UOC:HPM	2
8	PAOZZ	5935001677775	96906	MS27144-1	CONNECTOR,PLUG,ELEC PART OF KIT P/N 57K1628..... UOC:HPM	7
9	PAOZZ	5340000913790	96906	MS21333-72	CLAMP,LOOP PART OF KIT P/N 57K1628. UOC:HPM	1
10	PAOZZ	5305000187838	24617	187838	SCREW,CAP,HEXAGON H #10-32 X 5/8, PART OF KIT P/N 57K1628..... UOC:HPM	3
11	PAOZZ	5340013144951	19207	12338696-1	BRACKET,ANGLE PART OF KIT P/N 57K1628..... UOC:HPM	1
12	PAOZZ	6150013662916	19207	12342667	WIRING,HARNESS PART OF IT P/N 57K1628..... UOC:HPM	1
13	PAOZZ	5306002264827	80204	B1821BH031C100N	BOLT,MACHINE 5/16-18 X 1 PART OF KIT P/N 57K1628..... UOC:HPM	2

END OF FIGURE

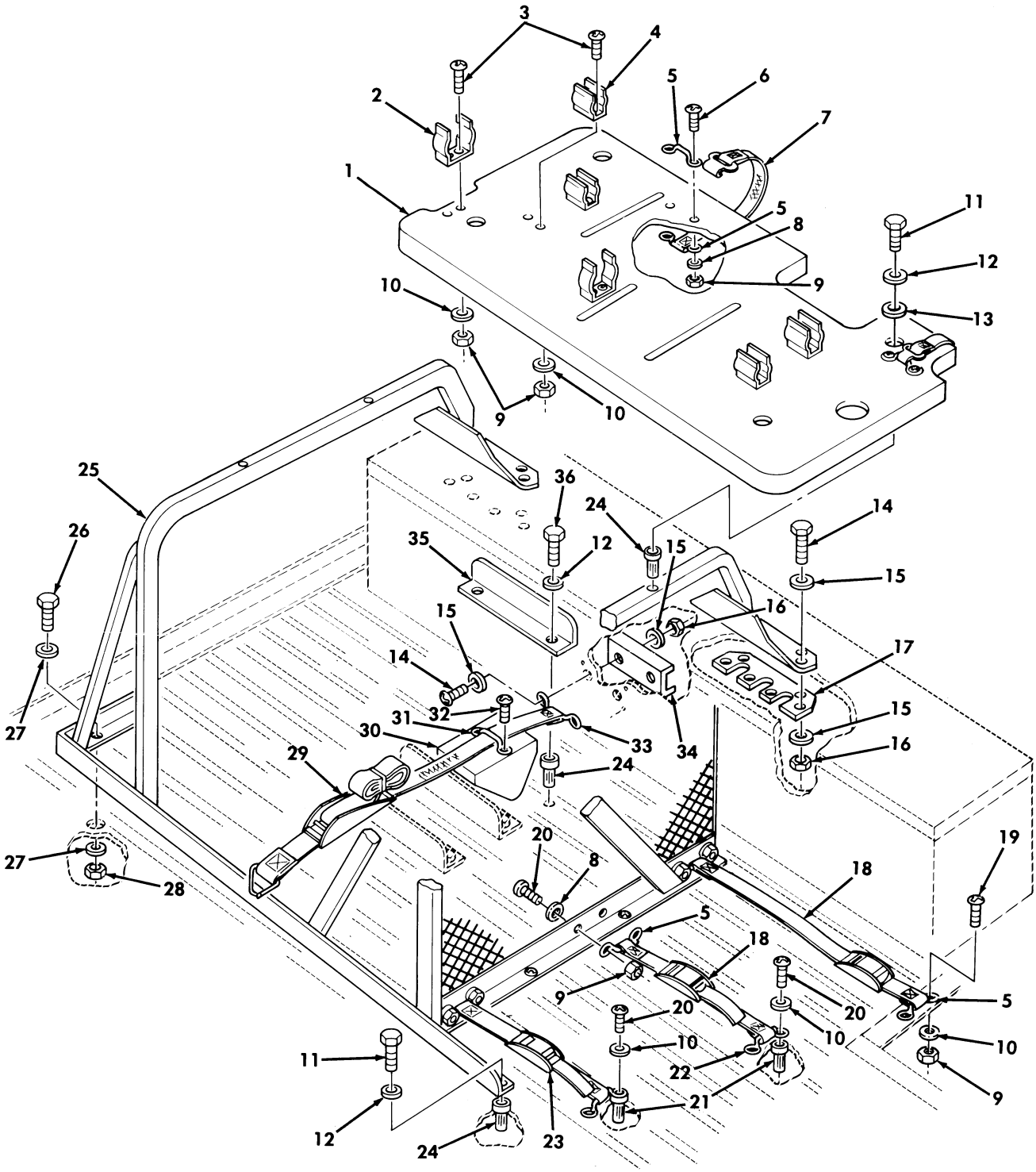

Figure 446. Kit, Prime Mover, Lt. Howitzer, 105 MM L119, Ammo Rack and Sight Boxes Stowage.

(1) ITEM NO	(2) SMR CODE	(3) NSN	(4) CAGEC	(5) PART NUMBER	(6) DESCRIPTION AND USABLE ON CODES(UOC)	(7) QTY
					GROUP 3307 SPECIAL PURPOSE KITS	
					FIG. 446 KIT,PRIME MOVER,LT. HOWITZER,105 MM L119,AMMO RACK AND SIGHT BOXES STOWAGE	
1	MOOZZ		19207	12342595	TRAY,AMMO GUARD TOP MAKE FROM PLYWOOD,P/N MIL-P-18066,.750 THICK, PART OF KIT P/N 57K1628..... UOC:HPM	1
2	PAOZZ	5340013601727	19207	12342584	CLIP,SPRING TENSION PART OF KIT P/N 57K1628..... UOC:HPM	2
3	PAOZZ	5305009953442	96906	MS35207-268	SCREW,MACHINE #10-32 X 1.250,PART OF KIT P/N 57K1628..... UOC:HPM	12
4	PAOZZ	5340013598819	19207	12342585	CLIP,SPRING TENSION PART OF KIT P/N 57K1628..... UOC:HPM	4
5	PAOZZ	5340013145957	19207	12338839-1	LOOP,STRAP FASTENER PART OF KIT P/N 57K1628..... UOC:HPM	8
6	PAOZZ	5305009847352	96906	MS35191-278	SCREW,MACHINE #10-32 X 1.50,PART OF KIT P/N 57K1628..... UOC:HPM	4
7	PAOZZ	5340013604909	19207	12339816-3	STRAP,WEBBING PART OF KIT P/N 57K1628..... UOC:HPM	2
8	PAOZZ	5310008098546	96906	MS27183-8	WASHER,FLAT #10,PART OF KIT P/N 57K1628..... UOC:HPM	16
9	PAOZZ	5310002514503	24617	9411893	NUT,LOCK #10-32,PART OF KIT P/N 57K1628..... UOC:HPM	24
10	PAOZZ	5310000145850	96906	MS27183-42	WASHER,FLAT #10,PART OF KIT P/N 57K1628..... UOC:HPM	18
11	PAOZZ	5340013235509	24617	454838	BOLT,MACHINE PART OF KIT P/N 57K1628 UOC:HPM	10
12	PAOZZ	5310005825965	96906	MS35338-44	WASHER,LOCK 1/4,PART OF KIT P/N 57K1628..... UOC:HPM	16
13	PAOZZ	5310008093078	96906	MS27183-11	WASHER,FLAT 1/4,PART OF KIT P/N 57K1628..... UOC:HPM	4
14	PAOZZ	5305002253843	OAT62	35A2C5	SCREW,CAP,HEXAGON H 1/4-20 X 1.00, PART OF KIT P/N 57K1628..... UOC:HPM	14
15	PAOZZ	5310011023270	24617	2436161	WASHER,FLAT 1/4,PART OF KIT P/N 57K1628..... UOC:HPM	28
16	PAOZZ	5310000614650	96906	MS51943-31	NUT,SELF-LOCKING,HE 1/4-20,PART OF	14

(1) ITEM NO	(2) SMR CODE	(3) NSN	(4) CAGEC	(5) PART NUMBER	(6) DESCRIPTION AND USABLE ON CODES(UOC)	(7) QTY
					KIT P/N 57K1628..... UOC:HPM	
17	PFOZZ	5340013602979	19207	12342586	PLATE,MOUNTING PART OF KIT P/N 57K1628..... UOC:HPM	2
18	PAOZZ	5340012552812	19207	12340529-16	STRAP,WEBBING PART OF KIT P/N 57K1628..... UOC:HPM	2
19	PAOZZ	5305009847342	96906	MS35191-274	SCREW,MACHINE #10-32 X .750,PART OF KIT P/N 57K1628..... UOC:HPM	2
20	PAOZZ	5305009931848	96906	MS35207-265	SCREW,MACHINE #10-32 X .750,PART OF KIT P/N 57K1628..... UOC:HPM	10
21	PAOZZ	5310011981723	03481	S10P175	NUT,PLAIN,BLIND RIV #10-32,PART OF KIT P/N 57K1628..... UOC:HPM	4
22	PAOZZ	2510011995748	19207	12338839-8	LOOP,FOOTMAN,FLAT PART OF KIT P/N 57K1628..... UOC:HPM	2
23	PAOZZ	5340012032708	19207	12340529-7	STRAP,WEBBING PART OF KIT P/N 57K1628..... UOC:HPM	1
24	PAOZZ	5310011981722	19207	12339998-13	PLUSNUT 1/4-20,PART OF KIT P/N 57K1628..... UOC:HPM	16
25	PAOZZ	2590013602417	19207	12342574	RACK,AMMUNITION STO PART OF KIT P/N 57K1628..... UOC:HPM	1
26	PAOZZ	5305000712070	80204	B1821BH050C175N	BOLT,HEXAGON HEAD 1/2-13 X 1.75, PART OF KIT P/N 57K1628..... UOC:HPM	1
27	PAOZZ	5310001670823	88044	AN960-816	WASHER,FLAT 1/2,PART OF KIT P/N 57K1628..... UOC:HPM	2
28	PAOZZ	5310004883889	96906	MS51943-39	NUT,SELF-LOCKING 1/2-13,PART OF KIT P/N 57K1628..... UOC:HPM	1
29	PAOZZ	5340013601887	19207	12342594	STRAP,WEBBING PART OF KIT P/N 57K1628..... UOC:HPM	1
30	MOOZZ		19207	12342596	WEDGE MAKE FROM WOOD,P/N 13219E0079, 3.00 THICK,PART OF KIT P/N 57K1628.. UOC:HPM	1
31	PAOZZ	5340011978674	19207	12338839-6	HANDLE,BOW PART OF KIT P/N 57K1628. UOC:HPM	7
32	PAOZZ	5305004324254	96906	MS51861-69	SCREW,TAPPING 1/4-13 X 1.00,PART OF KIT P/N 57K1628..... UOC:HPM	2
33	PAOZZ	5340013609070	19207	12342587	CLAMP,BRIDGE PART OF KIT P/N 57K1628 UOC:HPM	1
34	PAOZZ	5340013601188	19207	12342583	BRACKET,DOUBLE ANGL PART OF KIT P/N 57K1628.....	1

(1) ITEM NO	(2) SMR CODE	(3) NSN	(4) CAGEC	(5) PART NUMBER	(6) DESCRIPTION AND USABLE ON CODES(UOC)	(7) QTY
					UOC:HPM	
35	PAOZZ	5340013601784	19207	12342580	BRACKET,ANGLE PART OF KIT P/N 57K1628.....	3
					UOC:HPM	
36	PAOZZ	5305000680508	07482	1C817P63	BOLT,HEXAGON 1/4-20 X .750,PART OF KIT P/N 57K1628.....	6
					UOC:HPM	

END OF FIGURE

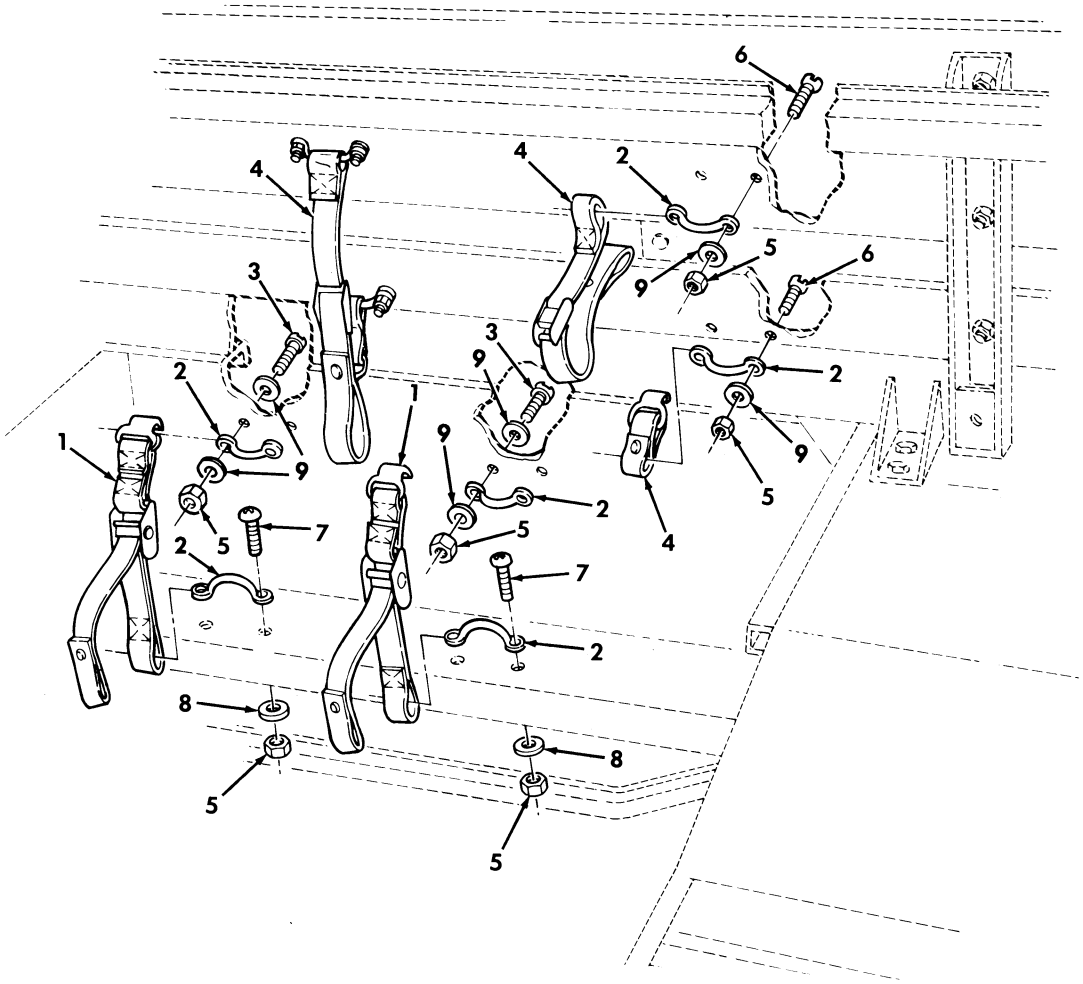

Figure 447. Kit, Prime Mover, Lt. Howitzer, 105 MM L119, Telephone, Remote, and Tripod Stowage.

(1) ITEM NO	(2) SMR CODE	(3) NSN	(4) CAGEC	(5) PART NUMBER	(6) DESCRIPTION AND USABLE ON CODES(UOC)	(7) QTY
					GROUP 3307 SPECIAL PURPOSE KITS	
					FIG. 447 KIT,PRIME MOVER,LT. HOWITZER,105 MM L119,TELEPHONE, REMOTE,AND TRIPOD STOWAGE	
1	PAOZZ	5340013604909	19207	12339816-3	STRAP ASSEMBLY PART OF KIT P/N 57K1628..... UOC:HPM	2
2	PAOZZ	5340013145957	19207	12338839-1	LOOP,STRAP,FASTENER PART OF KIT P/N 57K1628..... UOC:HPM	8
3	PAOZZ	5305009897435	96906	MS35207-264	SCREW,MACHINE PART OF KIT P/N 57K1628..... UOC:HPM	4
4	PAOZZ	5340012658923	19207	12339817-4	STRAP,WEBBING PART OF KIT P/N 57K1628..... UOC:HPM	2
5	PAOZZ	5310002514503	24617	9411893	NUT,LOCK #10-32,PART OF KIT P/N 57K1628..... UOC:HPM	16
6	PAOZZ	5305009572635	96906	MS35191-277	SCREW,MACHINE #10-32 X 1.25,PART OF KIT P/N 57K1628..... UOC:HPM	8
7	PAOZZ	5305009847341	96906	MS35191-273	SCREW,MACHINE #10-32 X 0.625,PART OF KIT P/N 57K1628..... UOC:HPM	4
8	PAOZZ	5310000145850	96906	MS27183-42	WASHER,FLAT #10,PART OF KIT P/N 57K1628..... UOC:HPM	4
9	PAOZZ	5310008098546	96906	MS27183-8	WASHER,FLAT #10,PART OF KIT P/N 57K1628..... UOC:HPM	16

END OF FIGURE

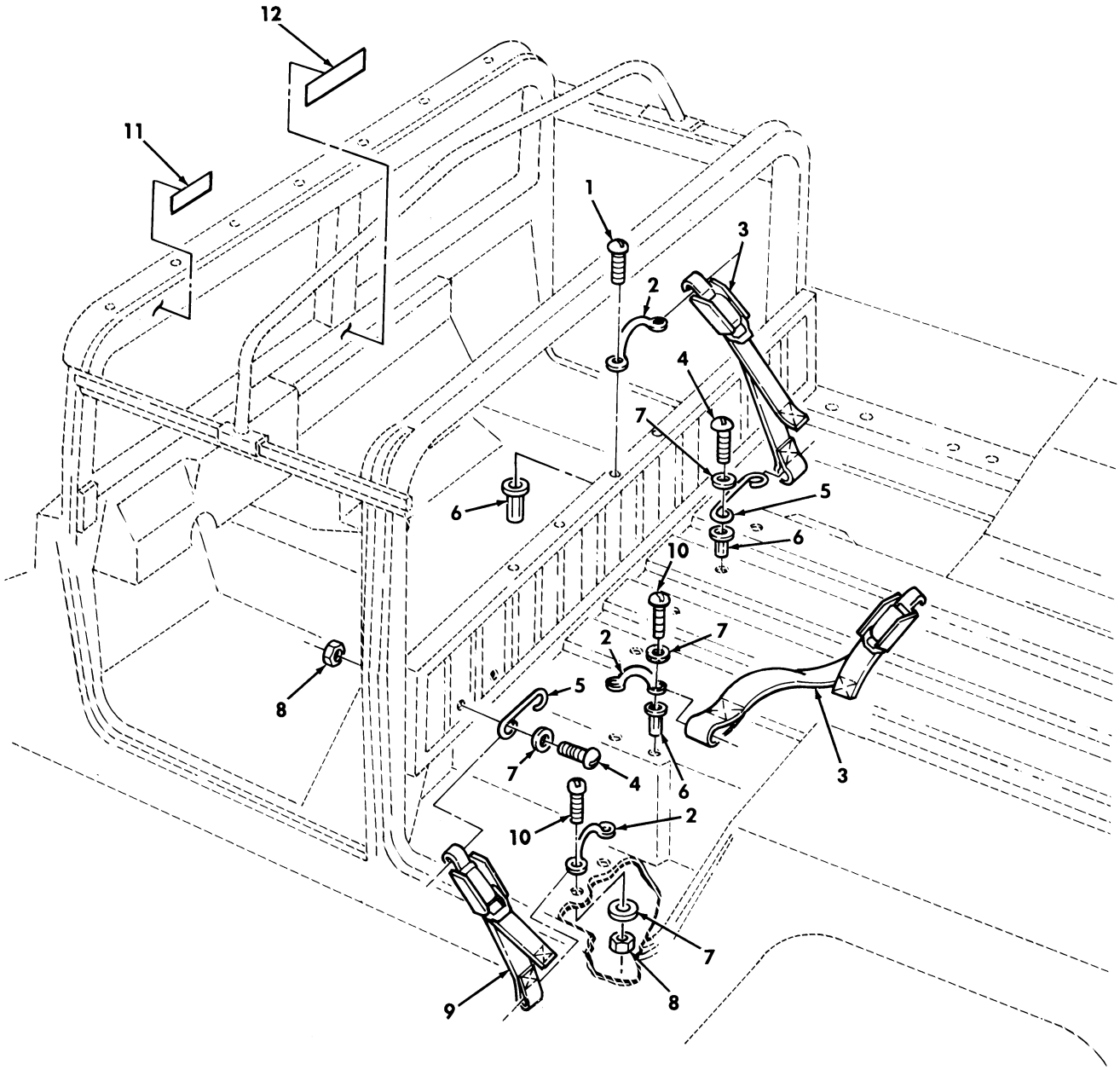

Figure 448. Kit, Prime Mover, Lt. Howitzer, 105 MM L119, Fuel Can, Water Can, Section Chest, and Spade Stowage.

(1) ITEM NO	(2) SMR CODE	(3) NSN	(4) CAGEC	(5) PART NUMBER	(6) DESCRIPTION AND USABLE ON CODES(UOC)	(7) QTY
					GROUP 3307 SPECIAL PURPOSE KITS	
					FIG. 448 KIT,PRIME MOVER,LT. HOWITZER,105 MM L119,FUEL CAN, WATER CAN,SECTION CHEST,AND SPADE STOWAGE	
1	PAOZZ	5305009847342	96906	MS35191-274	SCREW,MACHINE #10-32 X 0.75,PART OF KIT P/N 57K1628..... UOC:HPM	4
2	PAOZZ	5340013145957	19207	12338839-1	LOOP,STRAP,FASTENER PART OF KIT P/N 57K1628..... UOC:HPM	5
3	PAOZZ	5340012584529	19207	12340507-4	STRAP,WEBBING PART OF KIT P/N 57K1628..... UOC:HPM	4
4	PAOZZ	5305009931848	96906	MS35207-265	SCREW,MACHINE PART OF KIT P/N 57K1628..... UOC:HPM	8
5	PAOZZ	2510011995748	19207	12338839-8	LOOP,FOOTMAN,FLAT PART OF KIT P/N 57K1628..... UOC:HPM	4
6	PAOZZ	5310011981723	03481	S10P175	NUT,PLAIN,BLIND RIV #10-32,PART OF KIT P/N 57K1628..... UOC:HPM	12
7	PAOZZ	5310000145850	96906	MS27183-42	WASHER,FLAT #10,PART OF KIT P/N 57K1628..... UOC:HPM	14
8	PAOZZ	5310002514503	24617	9411893	NUT,LOCK #10-32,PART OF KIT P/N 57K1628..... UOC:HPM	6
9	PAOZZ	5340013617879	19207	12340507-6	STRAP,RETAINING PART OF KIT P/N 57K1628..... UOC:HPM	1
10	PAOZZ	5305009847341	96906	MS35191-273	SCREW,MACHINE #10-32 X 5/8,PART OF KIT P/N 57K1628..... UOC:HPM	6
11	PAOZZ	9905013658849	19207	12342670	PLATE,INSTRUCTION PART OF KIT P/N 57K1628..... UOC:HPM	1
12	PAOZZ		19207	12342669	DECAL CAUTION PART OF KIT P/N 57K1628..... UOC:HPM	1

END OF FIGURE

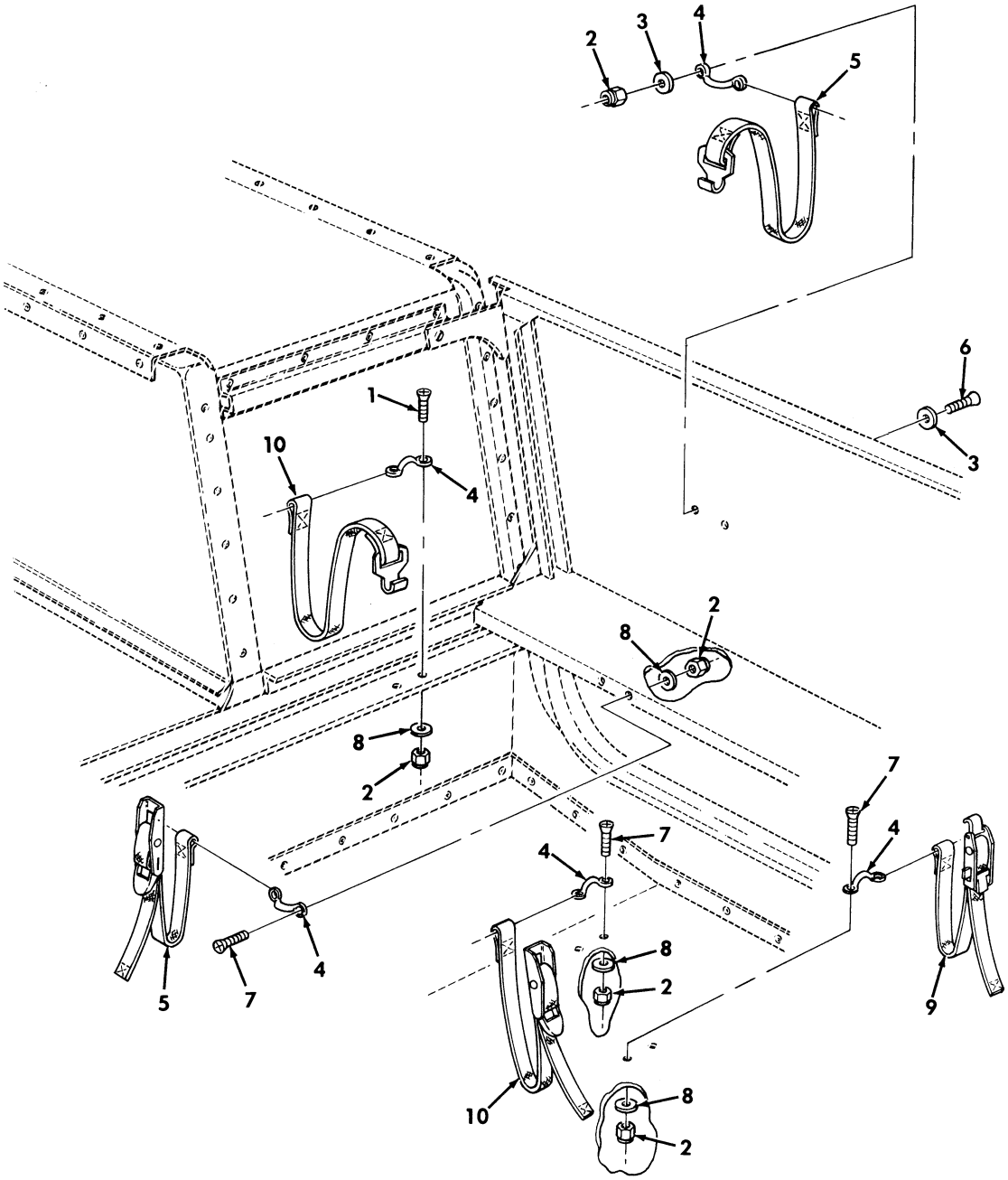

Figure 449. Kit, Prime Mover, Lt. Howitzer, 105 MM L119, G.D.U. and G.D.U. Battery Stowage.

(1) ITEM NO	(2) SMR CODE	(3) NSN	(4) CAGEC	(5) PART NUMBER	(6) DESCRIPTION AND USABLE ON CODES(UOC)	(7) QTY
					GROUP 3307 SPECIAL PURPOSE KITS	
					FIG. 449 KIT,PRIME MOVER,LT. HOWITZER,105 MM L119,G.D.U. AND G.D.U. BATTERY STOWAGE	
1	PAOZZ	5305009847343	96906	MS35191-276	SCREW,MACHINE #10-32 X 1.00,PART OF KIT P/N 57K1628..... UOC:HPM	2
2	PAOZZ	5310002514503	24617	9411893	NUT,LOCK #10-32,PART OF KIT P/N 57K1628..... UOC:HPM	10
3	PAOZZ	5310008098546	96906	MS27183-8	WASHER,FLAT #10,PART OF KIT P/N 57K1628..... UOC:HPM	4
4	PAOZZ	5340013145957	19207	12338839-1	LOOP,STRAP,FASTENER PART OF KIT P/N 57K1628..... UOC:HPM	5
5	PAOZZ	5340012032708	19207	12340529-7	STRAP,WEBBING PART OF KIT P/N 57K1628..... UOC:HPM	2
6	PAOZZ	5305009897435	96906	MS35207-264	SCREW,MACHINE #10-32 X 5/8,PART OF KIT P/N 57K1628..... UOC:HPM	2
7	PAOZZ	5305009847341	96906	MS35191-273	SCREW,MACHINE #10-32 X 5/8,PART OF KIT P/N 57K1628..... UOC:HPM	6
8	PAOZZ	5310000145850	96906	MS27183-42	WASHER,FLAT #10,PART OF KIT P/N 57K1628..... UOC:HPM	8
9	PAOZZ	5340013617879	19207	12340507-6	STRAP,WEBBING PART OF KIT P/N 57K1628..... UOC:HPM	1
10	PAOZZ	5340012552812	19207	12340529-16	STRAP,WEBBING PART OF KIT P/N 57K1628..... UOC:HPM	2

END OF FIGURE

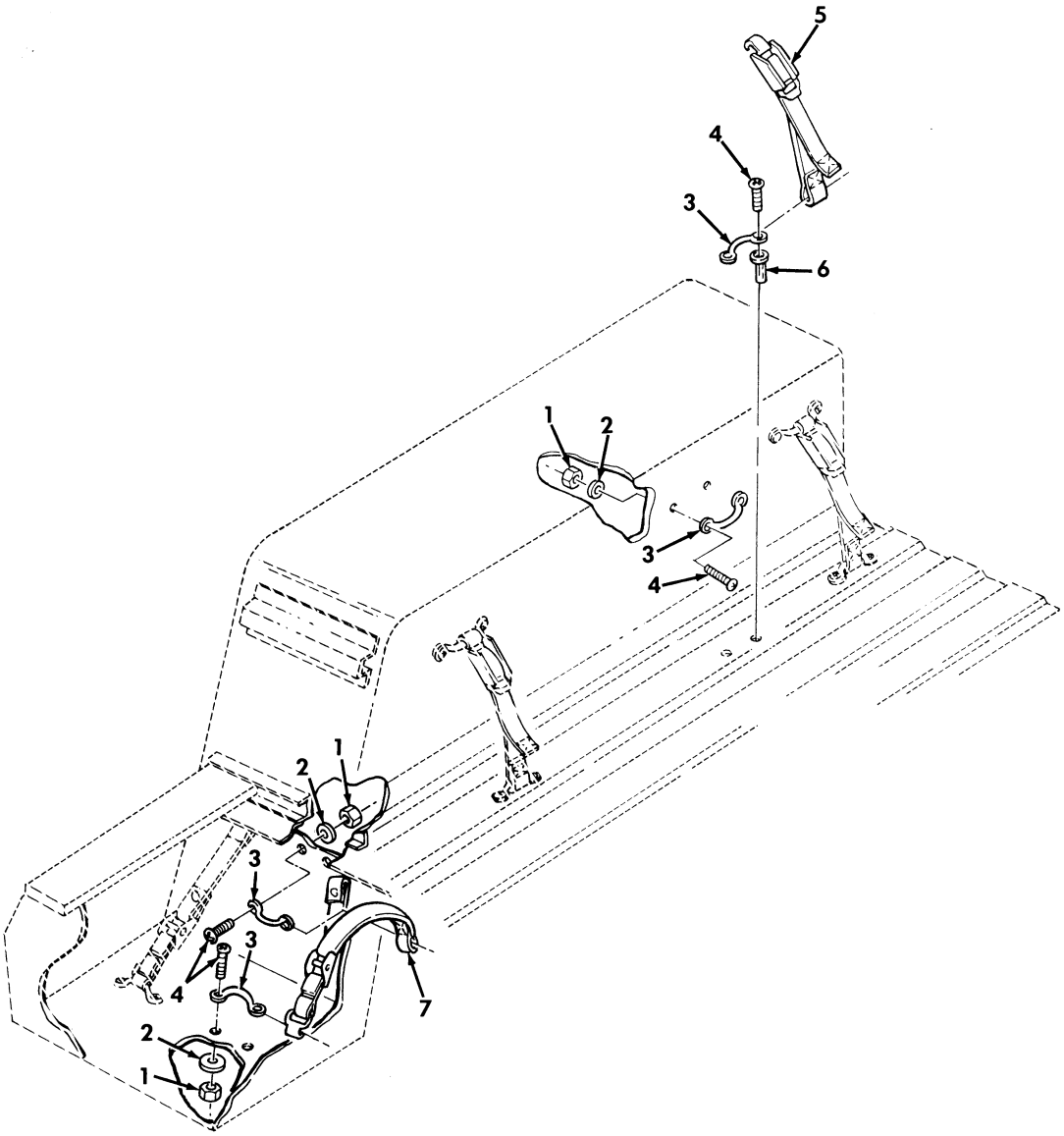

Figure 450. Kit, Prime Mover, Lt. Howitzer, 105 MM L119, Aiming Post and Cable Reel Stowage.

(1) ITEM NO	(2) SMR CODE	(3) NSN	(4) CAGEC	(5) PART NUMBER	(6) DESCRIPTION AND USABLE ON CODES(UOC)	(7) QTY
					GROUP 3307 SPECIAL PURPOSE KITS	
					FIG. 450 KIT,PRIME MOVER,LT. HOWITZER,105 MM L119,AIMIMG POST AND CABLE REEL STOWAGE	
1	PAOZZ	5310002514503	24617	9411893	NUT,LOCK #10-32,PART OF KIT P/N 57K1628..... UOC:HPM	19
2	PAOZZ	5310000145850	96906	MS27183-42	WASHER,FLAT #10,PART OF KIT P/N 57K1628..... UOC:HPM	19
3	PAOZZ	5340013145957	19207	12338839-1	LOOP,STRAP,FASTENER PART OF KIT P/N 57K1628..... UOC:HPM	10
4	PAOZZ	5305009847341	96906	MS35191-273	SCREW,MACHINE #10-32 X 5/8,PART OF KIT P/N 57K1628..... UOC:HPM	20
5	PAOZZ	5340012584529	19207	12340507-4	STRAP,WEBBING PART OF KIT P/N 57K1628..... UOC:HPM	3
6	PAOZZ	5310011981723	03481	S10P175	NUT,PLAIN,BLIND RIV #10-32,PART OF KIT P/N 57K1628..... UOC:HPM	1
7	PAOZZ	5340011985165	31272	45096-10	STRAP,WEBBING PART OF KIT P/N 57K1628..... UOC:HPM	2

END OF FIGURE

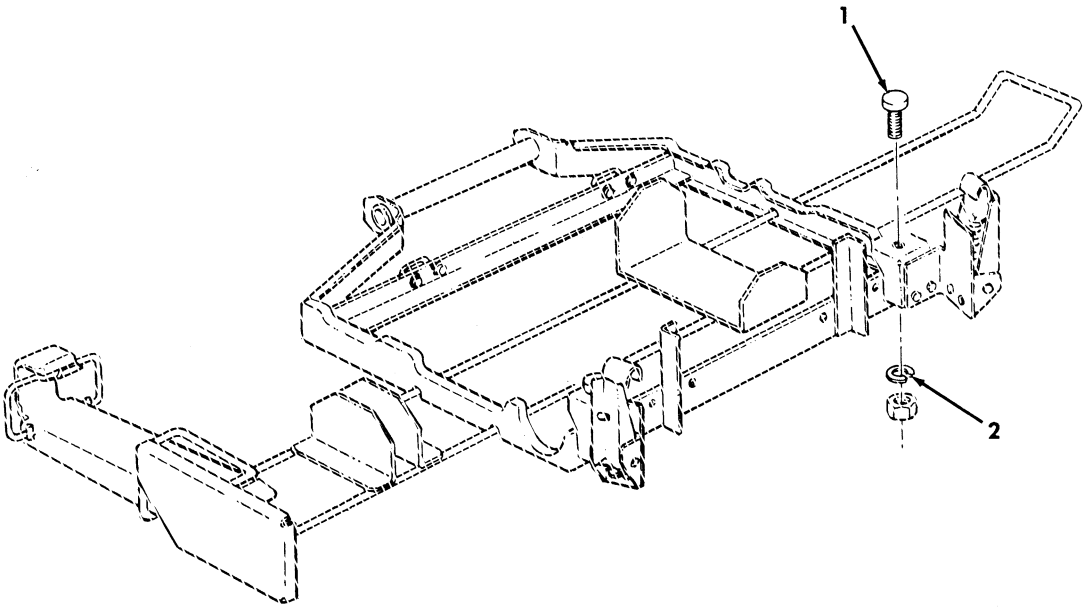

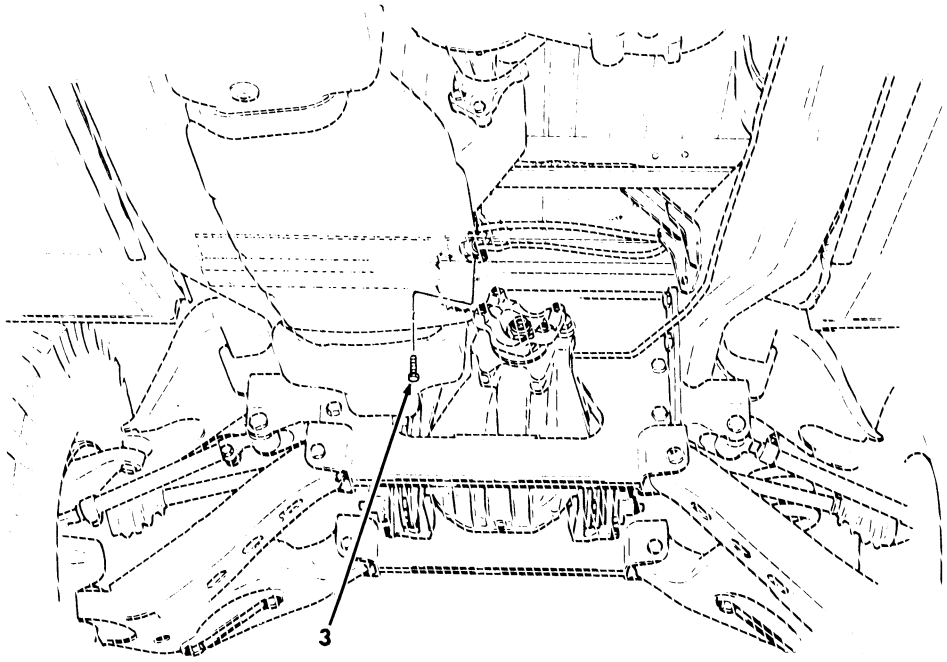

Figure 451. Kit, Prime Mover, Lt. Howitzer, 105 MM L119, Pioneer Tool Stowage Tray Hardware and Parking Brake Hardware.

(1) ITEM NO	(2) SMR CODE	(3) NSN	(4) CAGEC	(5) PART NUMBER	(6) DESCRIPTION AND USABLE ON CODES(UOC)	(7) QTY
					GROUP 3307 SPECIAL PURPOSE KITS	
					FIG. 451 KIT,PRIME MOVER,LT. HOWITZER,105 MM L119,PIONEER TOOL STOWAGE TRAY HARDWARE AND PARKING BRAKE HARDWARE	
1	PAOZZ	5340011858820	19207	12340846-1	BUMPER,NONMETALLIC PIONEER TOOL TRAY,STOP,PART OF KIT P/N 57K1628... UOC:HPM	2
2	PAOZZ	5310005825965	96906	MS35338-44	WASHER,LOCK 1/4,PART OF KIT P/N 57K1628..... UOC:HPM	2
3	PAOZZ	5305012854234	24617	9414241	SCREW,MACHINE PART OF KIT P/N 57K1628..... UOC:HPM	1
KIT	PDOZZ	2590013489748	19207	57K1628	MODIFICATION KIT,VE PRIME MOVER,LT. HOWITZER 105 MM L119..... UOC:HPM	1
					BOLT,ASSEMBLED (1) 445-4	
					BOLT,HEXAGON (1) 446-26	
					BOLT,MACHINE (2) 442-1	
					BOLT,MACHINE (12) 442-10	
					BOLT,MACHINE (4) 442-14	
					BOLT,MACHINE (4) 442-17	
					BOLT,MACHINE (8) 442-18	
					BOLT,MACHINE (2) 444-5	
					BOLT,MACHINE (10) 446-11	
					BOLT,MACHINE (6) 441-13	
					BOLT,MACHINE (6) 446-36	
					BOX,ACCESSORIES STO(1) 444-1	
					BRACKET (1) 443-8	
					BRACKET,ANGLE (1) 445-11	
					BRACKET,ANGLE (3) 446-35	
					BRACKET,DOUBLE ANGL(1) 446-34	
					BRACKET,DOUBLE ANGL(1) 443-3	
					BRACKET,DOUBLE ANGL(1) 445-6	
					BRACKET,VEHICULAR C(1) 442-3	
					BRACKET,VEHICULAR C(1) 442-6	
					BRACKET,VEHICULAT C(3) 442-6	
					BRACKET,VEHICULAR C(1) 442-3	
					BRACKET,VEHICULAR C(2) 442-9	
					BRACKET,VEHICULAR C(1) 442-11	
					BRACKET,VEHICULAR C(1) 442-15	
					BRACKET,VEHICULAR C(1) 442-19	
					BRACKET,VEHICULAR C(1) 442-11	
					BRACKET,VEHICULAR C(1) 442-19	
					BUMPER,NONMETALLIC (2) 451-1	
					BUMPER,VEHICULAR (1) 441-1	
					BUMPER,VEHICULAR (1) 442-16	
					CLAMP,BRIDGE (1) 446-33	
					CLAMP,LOOP (4) 443-4	
					CLAMP,LOOP (1) 444-7	

(1) ITEM NO	(2) SMR CODE	(3) NSN	(4) CAGEC	(5) PART NUMBER	(6) DESCRIPTION AND USABLE ON CODES(UOC)	(7) QTY
					CLAMP,LOOP (1) 445-5	
					CLAMP,LOOP (1) 445-9	
					CLIP,SPRING (4) 446-4	
					CLIP,SPRING (2) 446-2	
					CONNECTOR PLUG ELEC(2) 445-7	
					CONNECTOR PLUG ELEC(7) 445-8	
					CONTROL HANDLE,WINC(1) 444-4	
					DECAL (1) 443-18	
					FRAME SECTION,STRUC(1) 441-4	
					FRAME SECTION,STRUC(1) 441-4	
					FRAME SECTION,STRUC(1) 441-12	
					FRAME SECTION,STRUC(1) 441-12	
					HANDLE,BOW (7) 446-31	
					LOOP,FOOTMAN (2) 446-22	
					LOOP,STRAP,FASTENER(4) 448-5	
					LOOP,STRAP,FASTENER(8) 446-5	
					LOOP,STRAP,FASTENER(8) 447-2	
					LOOP,STRAP,FASTENER(5) 448-2	
					LOOP,STRAP,FASTENER(5) 449-4	
					LOOP,STRAP,FASTENER(10) 450-3	
					NUT,LOCK (24) 446-9	
					NUT,LOCK (16) 447-5	
					NUT,LOCK (6) 448-8	
					NUT,LOCK (10) 449-2	
					NUT,LOCK (19) 450-1	
					NUT,PLAIN,ASSEMBLED(3) 445-3	
					NUT,PLAIN,BLIND RIV(4) 446-21	
					NUT,PLAIN,BLIND RIV(12) 448-6	
					NUT,PLAIN,BLIND RIV(1) 450-6	
					NUT,PLAIN,HEXAGON (2) 441-10	
					NUT,PLAIN,HEXAGON (4) 442-8	
					NUT,PLAIN,HEXAGON (2) 443-1	
					NUT,SELF-LOCKING (10) 441-5	
					NUT,SELF-LOCKING (30) 442-4	
					NUT,SELF-LOCKING (2) 442-20	
					NUT,SELF-LOCKING (1) 443-14	
					NUT,SELF-LOCKING (2) 444-3	
					NUT,SELF-LOCKING (2) 445-2	
					NUT,SELF-LOCKING (14) 446-16	
					NUT,SELF-LOCKING (1) 444-9	
					NUT,SELF-LOCKING (1) 446-28	
					NUT,SELF-LOCKING,HE(6) 441-9	
					NUT,SELF-LOCKING,HE(4) 441-11	
					PIN,COTTER (1) 442-13	
					PIN,COTTER (1) 443-17	
					PLATE,INSTRUCTION (1) 448-11	
					PLATE,INSTRUCTION (1) 448-12	
					PLATE,MOUNTING (4) 442-12	
					PLATE,MOUNTING (2) 446-17	
					PLUSNUT (16) 446-24	
					RACK,AMMUNITION STO(1) 446-25	
					SCREW,CAP,HEXAGON H(6) 441-2	
					SCREW,CAP,HEXAGON H(4) 441-7	

(1) ITEM NO	(2) SMR CODE	(3) NSN	(4) CAGEC	(5) PART NUMBER	(6) DESCRIPTION AND USABLE ON CODES(UOC)	(7) QTY
					SCREW,CAP,HEXAGON H(4)	441-14
					SCREW,CAP,HEXAGON H(4)	442-5
					SCREW,CAP,HEXAGON H(3)	445-10
					SCREW,CAP,HEXAGON H(2)	445-13
					SCREW,CAP,HEXAGON H(14)	446-14
					SCREW,MACHINE (6)	448-10
					SCREW,MACHINE (2)	443-5
					SCREW,MACHINE (12)	446-3
					SCREW,MACHINE (4)	446-6
					SCREW,MACHINE (2)	446-19
					SCREW,MACHINE (10)	446-20
					SCREW,MACHINE (4)	447-3
					SCREW,MACHINE (8)	447-6
					SCREW,MACHINE (4)	447-7
					SCREW,MACHINE (4)	448-1
					SCREW,MACHINE (8)	448-4
					SCREW,MACHINE (2)	449-1
					SCREW,MACHINE (2)	449-6
					SCREW,MACHINE (6)	449-7
					SCREW,MACHINE (20)	450-4
					SCREW,MACHINE (1)	451-3
					SCREW,MACHINE (1)	444-6
					SCREW,TAPPING (1)	443-7
					SCREW,TAPPING (1)	443-9
					SCREW,TAPPING (2)	446-32
					STRAP ASSEMBLY (2)	447-1
					STRAP,RETAINING (1)	446-29
					STRAP,RETAINING (1)	448-9
					STRAP,RETAINING (2)	446-7
					STRAP,TIEDOWN,ELECT(4)	443-6
					STRAP,WEBBING (2)	446-18
					STRAP,WEBBING (1)	446-23
					STRAP,WEBBING (2)	447-4
					STRAP,WEBBING (4)	448-3
					STRAP,WEBBING (2)	449-5
					STRAP,WEBBING (2)	450-7
					STRAP,WEBBING (1)	449-9
					STRAP,WEBBING (2)	449-10
					STRAP,WEBBING (3)	450-5
					TEE,HOSE (1)	443-10
					TRAY,AMMO (1)	446-1
					TUBING,NONMETALLIC (1)	443-11
					TUBING,NONMETALLIC (1)	443-16
					WASHER,FLAT (12)	441-3
					WASHER,FLAT (18)	441-6
					WASHER,FLAT (8)	441-8
					WASHER,FLAT (4)	444-2
					WASHER,FLAT (2)	445-1
					WASHER,FLAT (16)	446-8
					WASHER,FLAT (18)	446-10
					WASHER,FLAT (4)	446-13
					WASHER,FLAT (28)	446-15
					WASHER,FLAT (2)	446-27

(1) ITEM NO	(2) SMR CODE	(3) NSN	(4) CAGEC	(5) PART NUMBER	(6) DESCRIPTION AND USABLE ON CODES(UOC)	(7) QTY
					WASHER,FLAT (4) 447-8	
					WASHER,FLAT (16) 447-9	
					WASHER,FLAT (14) 448-7	
					WASHER,FLAT (4) 449-3	
					WASHER,FLAT (8) 449-8	
					WASHER,FLAT (19) 450-2	
					WASHER,FLAT (60) 442-2	
					WASHER,LOCK (4) 442-7	
					WASHER,LOCK (2) 443-2	
					WASHER,LOCK (1) 443-13	
					WASHER,LOCK (1) 443-12	
					WASHER,LOCK (1) 444-8	
					WASHER,LOCK (16) 446-12	
					WASHER,LOCK (2) 451-2	
					WEDGE (1) 446-30	
					WINCH,DRUM,VEHICLE (1) 443-15	
					WIRING ASSEMBLY (1) 445-12	

END OF FIGURE

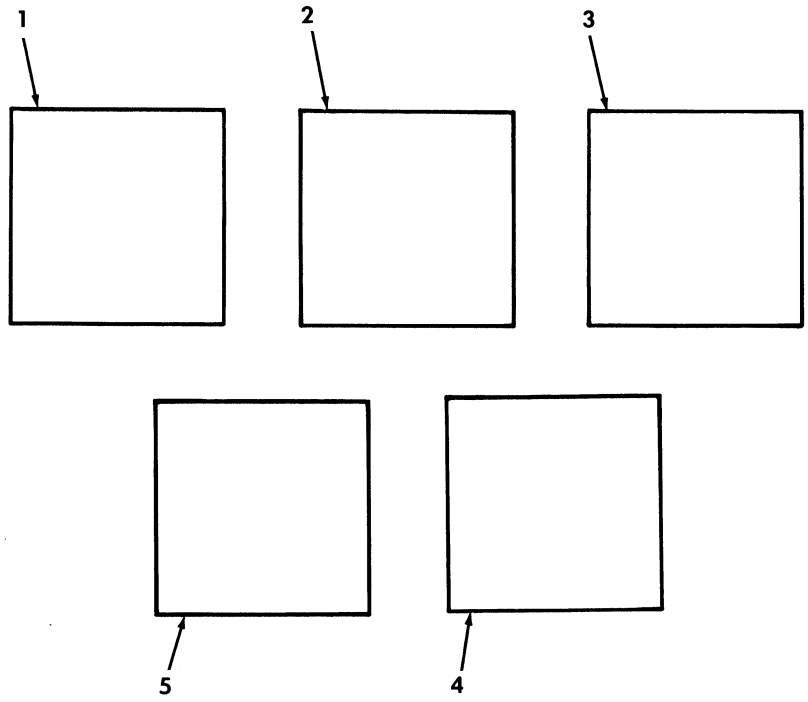

Figure 452. Kit, Towed Vulcan System.

(1) ITEM NO	(2) SMR CODE	(3) NSN	(4) CAGEC	(5) PART NUMBER	(6) DESCRIPTION AND USABLE ON CODES(UOC)	(7) QTY
					GROUP 3307 SPECIAL PURPOSE KITS	
					FIG. 452 KIT,TOWED VULCAN SYSTEM	
1	KFOZZ		19207	57K1641	KIT,CAMOUFLAGE RACK PART OF KIT P/N 57K0235..... UOC:KTV	1
2	PAOZZ	2540011853216	19207	12338105	PARTS KIT,SEAT PART OF KIT P/N 57K0235..... UOC:KTV	1
3	PAOZZ	2510012468287	19207	12338119	PANEL,BODY,VEHICULA PART OF KIT P/N 57K0235..... UOC:KTV	1
4	PAOZZ	2540013160892	19207	57K0112	COVER,FITTED,VEHICU PART OF KIT P/N 57K0235..... UOC:KTV	1
5	PAOZZ	2540011910973	19207	12340744	COVER,FITTED,VEHICU PART OF KIT P/N 57K0235..... UOC:KTV	1
KIT	PDOZZ	2590013573127	19207	57K0235	KIT,TOWED VULCAN SY..... UOC:KTV	1
					COVER,FITTED,VEHICU(1) 452-4	
					COVER,FITTED,VEHICU(1) 452-5	
					KIT,CAMOUFLAGE (1) 452-1	
					PANEL,BODY,VEHICULA(1) 452-3	
					PARTS KIT,SEAT (1) 452-2	

END OF FIGURE

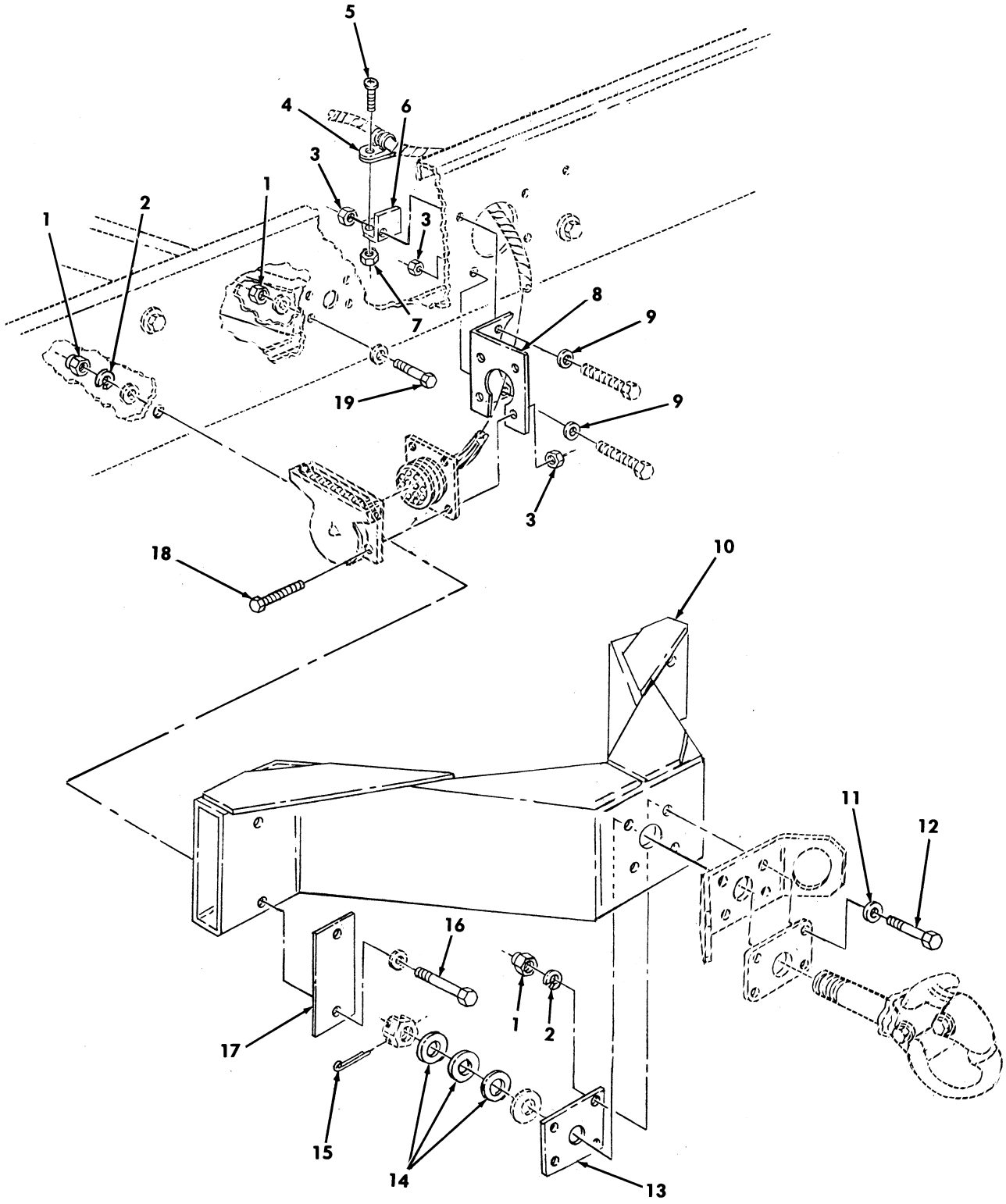

Figure 453. Kit, Pintle Extension.

(1) ITEM NO	(2) SMR CODE	(3) NSN	(4) CAGEC	(5) PART NUMBER	(6) DESCRIPTION AND USABLE ON CODES(UOC)	(7) QTY
					GROUP 3307 SPECIAL PURPOSE KITS	
					FIG. 453 KIT,PINTLE EXTENSION	
1	PAOZZ	5310004883889	96906	MS51943-39	NUT,SELF-LOCKING,HE 1/2-13 PART OF KIT P/N 57K1640..... UOC:AVY,BVY,HVY,NNN	12
2	PAOZZ	5310005845272	02978	ERNA245	WASHER,LOCK 1/2 PART OF KIT P/N 57K1640..... UOC:AVY,BVY,HVY,NNN	8
3	PAOZZ	5310011520598	24617	271172	NUT,SELF-LOCKING,AS 1/4-20 PART OF KIT P/N 57K1640..... UOC:AVY,BVY,HVY,NNN	6
4	PAOZZ	5340000572906	96906	MS21333-73	CLAMP,LOOP PART OF KIT P/N 57K1640.. UOC:AVY,BVY,HVY,NNN	1
5	PAOZZ	5305009846193	96906	MS35206-245	SCREW,MACHINE .164-32 X 1/2 PART OF KIT P/N 57K1640..... UOC:AVY,BVY,HVY,NNN	1
6	PAOZZ	5340014067418	19207	12342664	BRACKET,ANGLE PART OF KIT P/N 57K1640..... UOC:AVY,BVY,HVY,NNN	1
7	PAOZZ	5310010695243	72582	271163	NUT,PLAIN,ASSEMBLED #8-32 PART OF KIT P/N 57K1640..... UOC:AVY,BVY,HVY,NNN	1
8	PAOZZ	5340014066965	19207	12342663	BRACKET,ANGLE PART OF KIT P/N 57K1640..... UOC:AVY,BVY,HVY,NNN	1
9	PAOZZ	5310011023270	24617	2436161	WASHER,FLAT 1/4 PART OF KIT P/N 57K1640..... UOC:AVY,BVY,HVY,NNN	2
10	PAOZZ	2540014117519	19207	12342661	PINTLE EXTENSION PART OF KIT P/N 57K1640..... UOC:AVY,BVY,HVY,NNN	1
11	PAOZZ	5310011211703	06032	2310-0143-001	WASHER,FLAT 1/2 PART OF KIT P/N 57K1640..... UOC:AVY,BVY,HVY,NNN	4
12	PAOZZ	5306013601128	24617	455006	BOLT,MACHINE 1/2-13 X 3.75 PART OF KIT P/N 57K1640..... UOC:AVY,BVY,HVY,NNN	4
13	PAOZZ	5340014066964	19207	12342662	PLATE,MOUNTING PART OF KIT P/N 57K1640..... UOC:AVY,BVY,HVY,NNN	1
14	PAOZZ	5310005158776	96906	MS20002-20	WASHER,FLAT 1-1/4 X 2.125 PART OF KIT P/N 57K1640..... UOC:AVY,BVY,HVY,NNN	3
15	PAOZZ	5315008460126	80205	MS24665-628	PIN,COTTER 1/4 X 3.00 PART OF KIT P/N 57K1640..... UOC:AVY,BVY,HVY,NNN	1
16	PAOZZ	5305014114455	24617	9430516	SCREW,CAP,HEXAGON H 1/2-13 X 5-3/4 PART OF KIT P/N 57K1640..... UOC:AVY,BVY,HVY,NNN	4
17	PAOZZ	5340014077192	19207	12342665	PLATE,MOUNTING PART OF KIT P/N 57K1640.....	2

(1) ITEM NO	(2) SMR CODE	(3) NSN	(4) CAGEC	(5) PART NUMBER	(6) DESCRIPTION AND USABLE ON CODES(UOC)	(7) QTY
					UOC:AVY,BVY,HVY,NNN	
18	PAOZZ	5305010164344	96906	MS51849-95	SCREW,MACHINE 1/4-20 X 5/8 PART OF KIT P/N 57K1640.....	4
					UOC:AVY,BVY,HVY,NNN	
19	PAOZZ	5306013601125	24617	455000	BOLT,MACHINE 1/2-13 X 1.25 PART OF KIT P/N 57K1640.....	4
					UOC:AVY,BVY,HVY,NNN	
KIT	PAOZZ	5340014107036	19207	57K1640	HARDWARE KIT,MECHAN.....	1
					UOC:AVY,BVY,HVY	
					BOLT,MACHINE (4) 453-19	
					BOLT,MACHINE (4) 453-12	
					BRACKET,ANGLE (1) 453-8	
					BRACKET,ANGLE (1) 453-6	
					CLAMP,LOOP (1) 453-4	
					NUT,PLAIN,ASSEMBLED(1) 453-7	
					NUT,SELF-LOCKING,HE(12) 453-1	
					NUT,SELF-LOCKING,AS(6) 453-3	
					PIN,COTTER (1) 453-15	
					PINTLE EXTENSION (1) 453-10	
					PLATE,MOUNTING (1) 453-13	
					PLATE,MOUNTING (2) 453-17	
					SCREW,CAP,HEXAGON H(4) 453-16	
					SCREW,MACHINE (4) 453-18	
					SCREW,MACHINE (1) 453-5	
					WASHER,FLAT (3) 453-14	
					WASHER,FLAT (2) 453-9	
					WASHER,FLAT (4) 453-11	
					WASHER,LOCK (8) 453-2	

END OF FIGURE

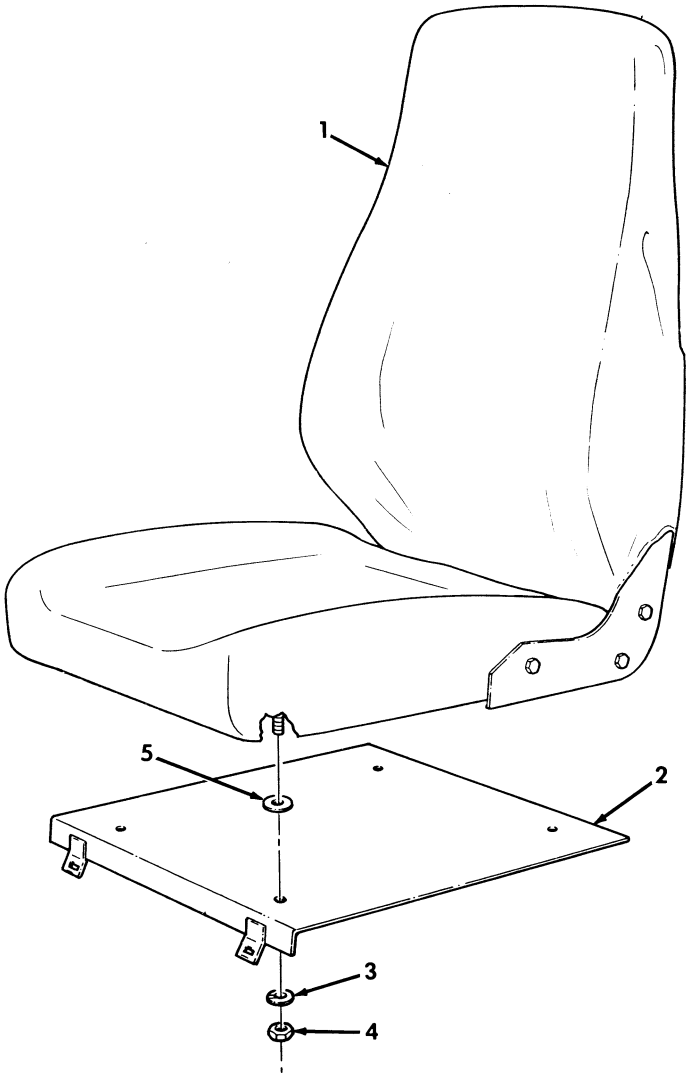

Figure 454. Kit, Rear Seat Assembly.

(1) ITEM NO	(2) SMR CODE	(3) NSN	(4) CAGEC	(5) PART NUMBER	(6) DESCRIPTION AND USABLE ON CODES(UOC)	(7) QTY
					GROUP 3307 SPECIAL PURPOSE KITS	
					FIG. 454 KIT,REAR SEAT ASSEMBLY	
1	PAOZZ	2540014364175	62226	8.6272-01	SEAT,VEHICULAR REAR PART OF KIT P/N 57K3196..... UOC:A13,A14,BVY,H13,H14,NNN	2
1	PAOZZ	2540014769353	62226	8.6272-02	SEAT,VEHICULAR REAR PART OF KIT P/N 57K3197..... UOC:A13,A14,BVY,H13,H14,NNN	2
2	PBOZZ	2540014770162	19207	12446966	PLATE,REAR SEAT,MNT LEFT,PART OF KIT P/N 57K3196,PART OF KIT P/N 57K3197..... UOC:A13,A14,BVY,H13,H14,NNN	1
2	PBOZZ	2540014770184	19207	12446967	PLATE,REAR SEAT,MNT RIGHT,PART OF KIT P/N 57K3196,PART OF KIT P/N 57K3197..... UOC:A13,A14,BVY,H13,H14,NNN	1
3	PAOZZ	5310004079566	96906	MS35338-45	WASHER,LOCK PART OF KIT P/N 57K3196, PART OF KIT P/N 57K3197..... UOC:A13,A14,BVY,H13,H14,NNN	8
4	PAOZZ	5310013815328	24617	9413583	NUT,PLAIN,HEXAGON PART OF KIT P/N 57K3196 PART OF KIT P/N 57K3197..... UOC:A13,A14,BVY,H13,H14,NNN	8
5	PAOZZ	5365013820986	19207	12343055	SPACER,RING PART OF KIT P/N 57K3196 PART OF KIT P/N 57K3197..... UOC:A13,A14,BVY,H13,H14,NNN	8
KIT	PDOZZ	2540014107035	19207	57K3196	PARTS KIT,SEAT,VEHI GREEN..... UOC:A13,A14,BVY,H13,H14,NNN	1
					PLATE,REAR (1) 454-2	
					PLATE,REAR (1) 454-2	
					NUT (8) 454-4	
					SEAT,REAR (2) 454-1	
					SPACER (8) 454-5	
					WASHER (8) 454-3	
KIT	PDOZZ	2540014107034	19207	57K3197	PARTS KIT,SEAT,VEHI TAN..... UOC:A13,A14,BVY,H13,H14,NNN	1
					PLATE,REAR (1) 454-2	
					PLATE,REAR (1) 454-2	
					NUT (8) 454-4	
					SEAT,REAR (2) 454-1	
					SPACER (8) 454-5	
					WASHER (8) 454-3	

END OF FIGURE

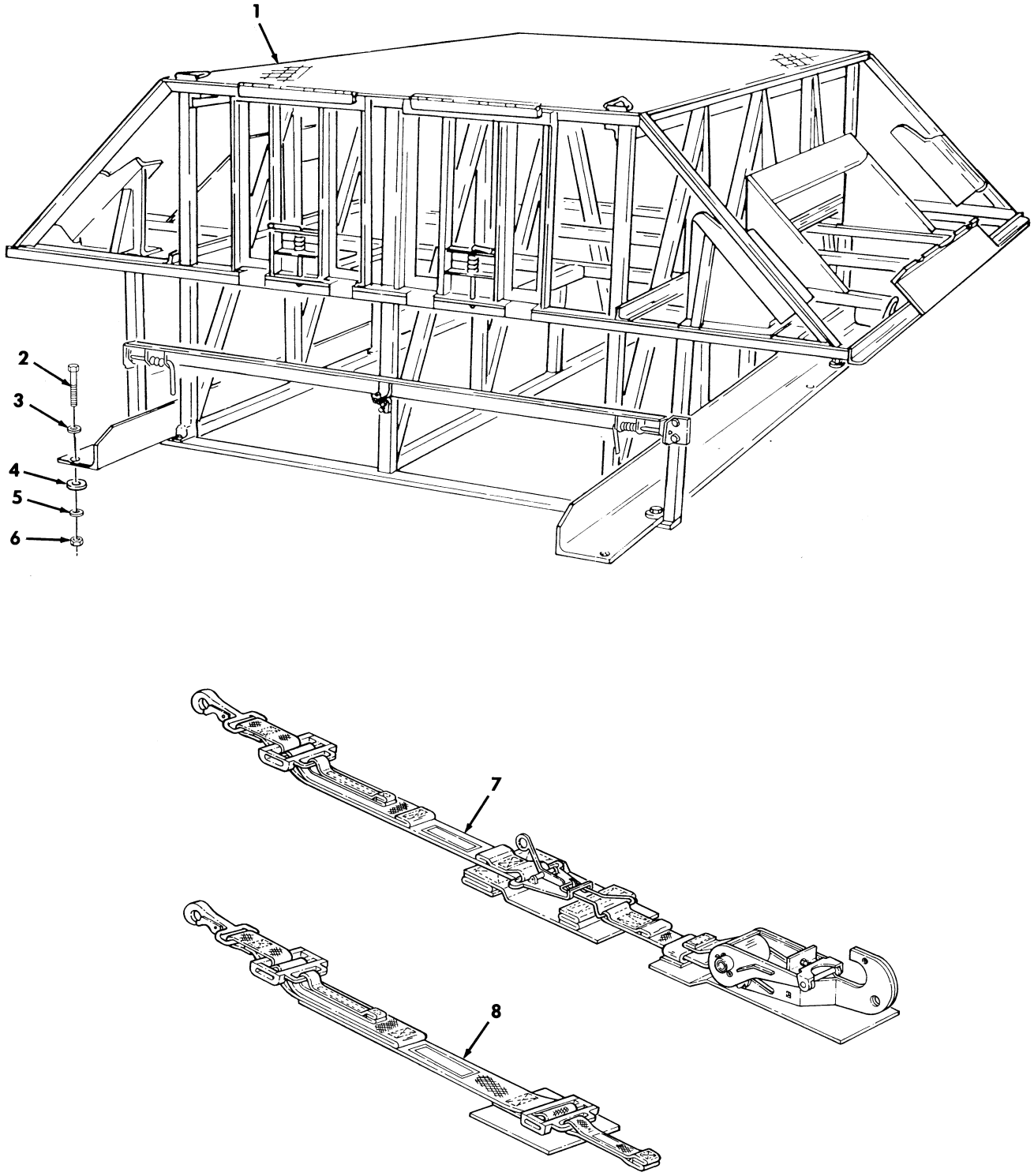

Figure 455. Kit, Man Portable Air-Defense System (MANPADS).

(1) ITEM NO	(2) SMR CODE	(3) NSN	(4) CAGEC	(5) PART NUMBER	(6) DESCRIPTION AND USABLE ON CODES(UOC)	(7) QTY
					GROUP 3307 SPECIAL PURPOSE KITS	
					FIG. 455 KIT,MAN PORTABLE AIR-DEFENSE SYSTEM (MANPADS)	
1	KFOFF		19207	12342855	RACK ASSEMBLY,MANPA PART OF KIT P/N 57K0227..... UOC:A13,A14,BVY,HVY,H13,H14,NNN	1
2	PAOZZ	5305000712071	80204	B1821BH050C200N	SCREW,CAP,HEXAGON H 1/2-13 X 2.00, PART OF KIT P/N 57K0227..... UOC:A13,A14,BVY,HVY,H13,H14,NNN	4
3	PAOZZ	5310008095998	96906	MS27183-18	WASHER,FLAT 1/2,PART OF KIT P/N 57K0227..... UOC:A13,A14,BVY,HVY,H13,H14,NNN	4
4	PAOZZ	5365014066336	19207	12342859	SPACER,RING PART OF KIT P/N 57K0227 UOC:A13,A14,BVY,HVY,H13,H14,NNN	4
5	PAOZZ	5310008093079	96906	MS27183-19	WASHER,FLAT 1/2,PART OF KIT P/N 57K0227..... UOC:A13,A14,BVY,HVY,H13,H14,NNN	4
6	PAOZZ	5310004883889	96906	MS51943-39	NUT,SELF-LOCKING,HE 1/2-13,PART OF KIT P/N 57K0227..... UOC:A13,A14,BVY,HVY,H13,H14,NNN	4
7	PAOZZ	5340014088526	19207	12342884	STRAP,WEBBING PART OF KIT P/N 57K0227..... UOC:A13,A14,BVY,HVY,H13,H14,NNN	4
8	PAOZZ	5340014067413	19207	12342883	STRAP,WEBBING PART OF KIT P/N 57K0227..... UOC:A13,A14,BVY,HVY,H13,H14,NNN	2
KIT	PDOFF	2510012744234	19207	57K0227	RACK ASSEMBLY,MANPA..... UOC:A13,A14,BVY,HVY,H13,H14,NNN	1
					NUT,SELF-LOCKING,HE(4) 455-6	
					RACK ASSEMBLY,MANPA(1) 455-1	
					SCREW,CAP,HEXAGON H(4) 455-2	
					SPACER,RING (4) 455-4	
					STRAP,WEBBING (2) 455-7	
					STRAP,WEBBING (4) 455-8	
					WASHER,FLAT (4) 455-3	
					WASHER,FLAT (4) 455-5	

END OF FIGURE

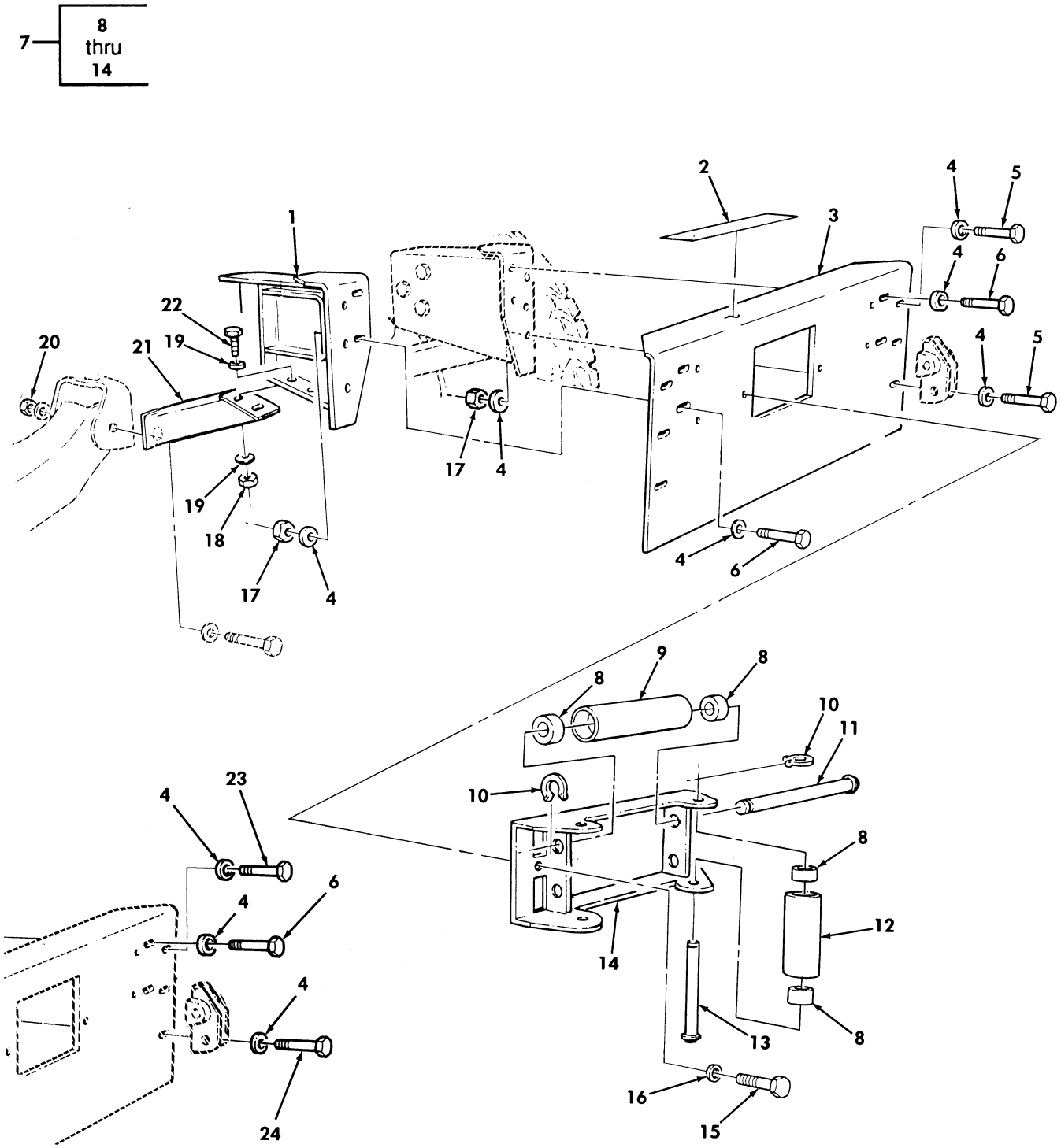

Figure 456. Kit, 9,000 Lb Winch.

(1) ITEM NO	(2) SMR CODE	(3) NSN	(4) CAGEC	(5) PART NUMBER	(6) DESCRIPTION AND USABLE ON CODES(UOC)	(7) QTY
					GROUP 3307 SPECIAL PURPOSE KITS	
					FIG. 456 KIT,9,000 LB WINCH	
1	PAOZZ	2510013581178	19207	12342387	FRAME SECTION,STRUC L.H. PART OF KIT P/N 57K0285 PART OF KIT P/N 57K3217..... UOC:AVY,A11,A13,A14,A24,A25,A26,A27, BVY,B17,B18,B24,B25,C17,HVY,H11,H13, H14,H17,H18,H21,H24,H25,H26,H27,H28, MMM,NNN	1
1	PAOZZ	2510013578789	19207	12342388	FRAME SECTION,STRUC R.H. PART OF KIT P/N 57K0285 PART OF KIT P/N 57K3217..... UOC:AVY,A11,A13,A14,A24,A25,A26,A27, BVY,B17,B18,B24,B25,C17,HVY,H11,H13, H14,H17,H18,H21,H24,H25,H26,H27,H28, MMM,NNN	1
2	PAOZZ	7690014450444	19207	12447102	MARKER,IDENTIFICATI PART OF KIT P/N 57K0285 PART OF KIT P/N 57K3217..... UOC:AVY,A11,A13,A14,A24,A25,A26,A27, BVY,B17,B18,B24,B25,C17,HVY,H11,H13, H14,H17,H18,H21,H24,H25,H26,H27,H28, MMM,NNN	1
3	PAOZZ	2540014128610	19207	12447091	BUMPER,VEHICULAR PART OF KIT P/N 57K3217..... UOC:AVY,A11,A13,A14,A24,A25,A26,A27, BVY,B17,B18,B24,B25,C17,HVY,H11,H13, H14,H17,H18,H21,H24,H25,H26,H27,H28, MMM,NNN	1
4	PAOZZ	5310011211703	06032	2310-0143-001	WASHER,FLAT 1/2 PART OF KIT P/N 57K0285 PART OF KIT P/N 57K3217..... UOC:AVY,A11,A13,A14,A24,A25,A26,A27, BVY,B17,B18,B24,B25,C17,HVY,H11,H13, H14,H17,H18,H21,H24,H25,H26,H27,H28, MMM,NNN	18
5	PAOZZ	5305000712071	80204	B1821BH050C200N	SCREW,CAP,HEXAGON H 1/2-13 X 2.00 PART OF KIT P/N 57K3217,PART OF KIT P/N57K0285..... UOC:AVY,A11,A13,A14,A24,A25,A26,A27, BVY,B17,B18,B24,B25,C17,HVY,H11,H13, H14,H17,H18,H21,H24,H25,H26,H27,H28, MMM,NNN	6
6	PAOZZ	5305000712067	80204	B1821BH050C125N	SCREW,CAP,HEXAGON H 1/2-13 X 1.25 PART OF KIT P/N 57K0285 PART OF KIT P/N 57K3217..... UOC:AVY,A11,A13,A14,A24,A25,A26,A27, BVY,B17,B18,B24,B25,C17,HVY,H11,H13, H14,H17,H18,H21,H24,H25,H26,H27,H28, MMM,NNN	4
7	PAOZZ	2590014486351	19207	12447104	BRACKET,VEHICULAR C PART OF KIT P/N 57K0285,PART OF KIT P/N 57K3217..... UOC:AVY,A11,A13,A14,A24,A25,A26,A27,	2

(1) ITEM NO	(2) SMR CODE	(3) NSN	(4) CAGEC	(5) PART NUMBER	(6) DESCRIPTION AND USABLE ON CODES(UOC)	(7) QTY
					BVY,B17,B18,B24,B25,C17,HVY,H11,H13, H14,H17,H18,H21,H24,H25,H26,H27,H28, MMM,NNN	
8	PAOZZ	3120014400043	19207	12447058	.BUSHING,SLEEVE..... UOC:AVY,A11,A13,A14,A24,A25,A26,A27, BVY,B17,B18,B24,B25,C17,HVY,H11,H13, H14,H17,H18,H21,H24,H25,H26,H27,H28, MMM,NNN	8
9	PAOZZ	3120014486269	19207	12447057-1	.ROLLER,LINEAR-ROTAR..... UOC:AVY,A11,A13,A14,A24,A25,A26,A27, BVY,B17,B18,B24,B25,C17,HVY,H11,H13, H14,H17,H18,H21,H24,H25,H26,H27,H28, MMM,NNN	2
10	PAOZZ	5325013882363	96906	MS3217-2075	.RING,RETAINING..... UOC:AVY,A11,A13,A14,A24,A25,A26,A27, BVY,B17,B18,B24,B25,C17,HVY,H11,H13, H14,H17,H18,H21,H24,H25,H26,H27,H28, MMM,NNN	8
11	PAOZZ	3040014779645	19207	12447060-1	.SHAFT,STRAIGHT..... UOC:AVY,A11,A13,A14,A24,A25,A26,A27, BVY,B17,B18,B24,B25,C17,HVY,H11,H13, H14,H17,H18,H21,H24,H25,H26,H27,H28, MMM,NNN	2
12	PAOZZ	3120014486268	19207	12447057-2	.ROLLER,LINEAR-ROTAR..... UOC:AVY,A11,A13,A14,A24,A25,A26,A27, BVY,B17,B18,B24,B25,C17,HVY,H11,H13, H14,H17,H18,H21,H24,H25,H26,H27,H28, MMM,NNN	2
13	PAOZZ	3040014443350	34623	12447060-2	.SHAFT,STRAIGHT..... UOC:AVY,A11,A13,A14,A24,A25,A26,A27, BVY,B17,B18,B24,B25,C17,HVY,H11,H13, H14,H17,H18,H21,H24,H25,H26,H27,H28, MMM,NNN	2
14	PAOZZ	2590014443399	34623	12447088	.BRACKET,VEHICULAR C..... UOC:AVY,A11,A13,A14,A24,A25,A26,A27, BVY,B17,B18,B24,B25,C17,HVY,H11,H13, H14,H17,H18,H21,H24,H25,H26,H27,H28, MMM,NNN	1
15	PAOZZ	5305006602832	96906	MS35307-389	SCREW,CAP,HEXAGON H 7/16-14 X 1.50 PART OF KIT P/N 57K0285 PART OF KIT P/N 57K3217..... UOC:AVY,A11,A13,A14,A24,A25,A26,A27, BVY,B17,B18,B24,B25,C17,HVY,H11,H13, H14,H17,H18,H21,H24,H25,H26,H27,H28, NNN,MMM	4
16	PAOZZ	5310008094085	24617	9420022	WASHER,FLAT 7/16 PART OF KIT P/N 57K0285 PART OF KIT P/N 57K3217..... UOC:AVY,A11,A13,A14,A24,A25,A26,A27, BVY,B17,B18,B24,B25,C17,HVY,H11,H13, H14,H17,H18,H21,H24,H25,H26,H27,H28, MMM,NNN	4
17	PAOZZ	5310004883889	96906	MS51943-39	NUT,SELF-LOCKING,HE 1/2-13 PART OF KIT P/N 57K0285 PART OF KIT P/N	8

(1) ITEM NO	(2) SMR CODE	(3) NSN	(4) CAGEC	(5) PART NUMBER	(6) DESCRIPTION AND USABLE ON CODES(UOC)	(7) QTY
					57K3217..... UOC:AVY,A11,A13,A14,A24,A25,A26,A27, BVY,B17,B18,B24,B25,C17,HVY,H11,H13, H14,H17,H18,H21,H24,H25,H26,H27,H28, MMM,NNN	
18	PAOZZ	5310009359021	96906	MS51943-35	NUT,SELF-LOCKING,HE 3/8-16 PART OF KIT P/N 57K0285 PART OF KIT P/N 57K3217..... UOC:AVY,A11,A13,A14,A24,A25,A26,A27, BVY,B17,B18,B24,B25,C17,HVY,H11,H13, H14,H17,H18,H21,H24,H25,H26,H27,H28, MMM,NNN	4
19	PAOZZ	5310014124013	24617	2436163	WASHER,FLAT 3/8 PART OF KIT P/N 57K0285 PART OF KIT P/N 57K3217..... UOC:AVY,A11,A13,A14,A24,A25,A26,A27, BVY,B17,B18,B24,B25,C17,HVY,H11,H13, H14,H17,H18,H21,H24,H25,H26,H27,H28, MMM,NNN	8
20	PAOZZ	5310004093333	96906	MS51943-45	NUT,SELF-LOCKING,HE 3/4-10 PART OF KIT P/N 57K0285 PART OF KIT P/N 57K3217..... UOC:AVY,A11,A13,A14,A24,A25,A26,A27, BVY,B17,B18,B24,B25,C17,HVY,H11,H13, H14,H17,H18,H21,H24,H25,H26,H27,H28, MMM,NNN	2
21	PAOZZ	2510013581176	19207	12342389	FRAME SECTION,STRUC L.H. PART OF KIT P/N 57K0285 PART OF KIT P/N 57K3217..... UOC:AVY,A11,A13,A14,A24,A25,A26,A27, BVY,B17,B18,B24,B25,C17,HVY,H11,H13, H14,H17,H18,H21,H24,H25,H26,H27,H28, MMM,NNN	1
21	PAOZZ	2510013581177	19207	12342390	FRAME SECTION,STRUC R.H. PART OF KIT P/N 57K0285 PART OF KIT P/N 57K3217..... UOC:AVY,A11,A13,A14,A24,A25,A26,A27, BVY,B17,B18,B24,B25,C17,HVY,H11,H13, H14,H17,H18,H21,H24,H25,H26,H27,H28, MMM,NNN	1
22	PAOZZ	5305009422196	80204	B1821BH038C100D	SCREW,CAP,HEXAGON H 3/8-16 X 1.00 PART OF KIT P/N 57K0285 PART OF KIT P/N 57K3217..... UOC:AVY,A11,A13,A14,A24,A25,A26,A27, BVY,B17,B18,B24,B25,C17,HVY,H11,H13, H14,H17,H18,H21,H24,H25,H26,H27,H28, MMM,NNN	4
23	PAOZZ	5305000712069	80204	B1821BH050C150N	SCREW,CAP,HEXAGON H 1/2-13 X 1.50 PART OF KIT P/N 57K0285 PART OF KIT P/N 57K3217..... UOC:AVY,A11,A13,A14,A24,A25,A26,A27, BVY,B17,B18,B24,B25,C17,HVY,H11,H13, H14,H17,H18,H21,H24,H25,H26,H27,H28, MMM,NNN	2

(1) ITEM NO	(2) SMR CODE	(3) NSN	(4) CAGEC	(5) PART NUMBER	(6) DESCRIPTION AND USABLE ON CODES(UOC)	(7) QTY
24	PAOZZ	5305000712070	80204	B1821BH050C175N	SCREW,CAP,HEXAGON H 1/2-13 X 1.75 PART OF KIT P/N 57K0285 PART OF KIT P/N 57K3217..... UOC:AVY,A11,A13,A14,A24,A25,A26,A27, BVY,B17,B18,B24,B25,C17,HVY,H11,H13, H14,H17,H18,H21,H24,H25,H26,H27,H28, MMM,NNN	4

END OF FIGURE

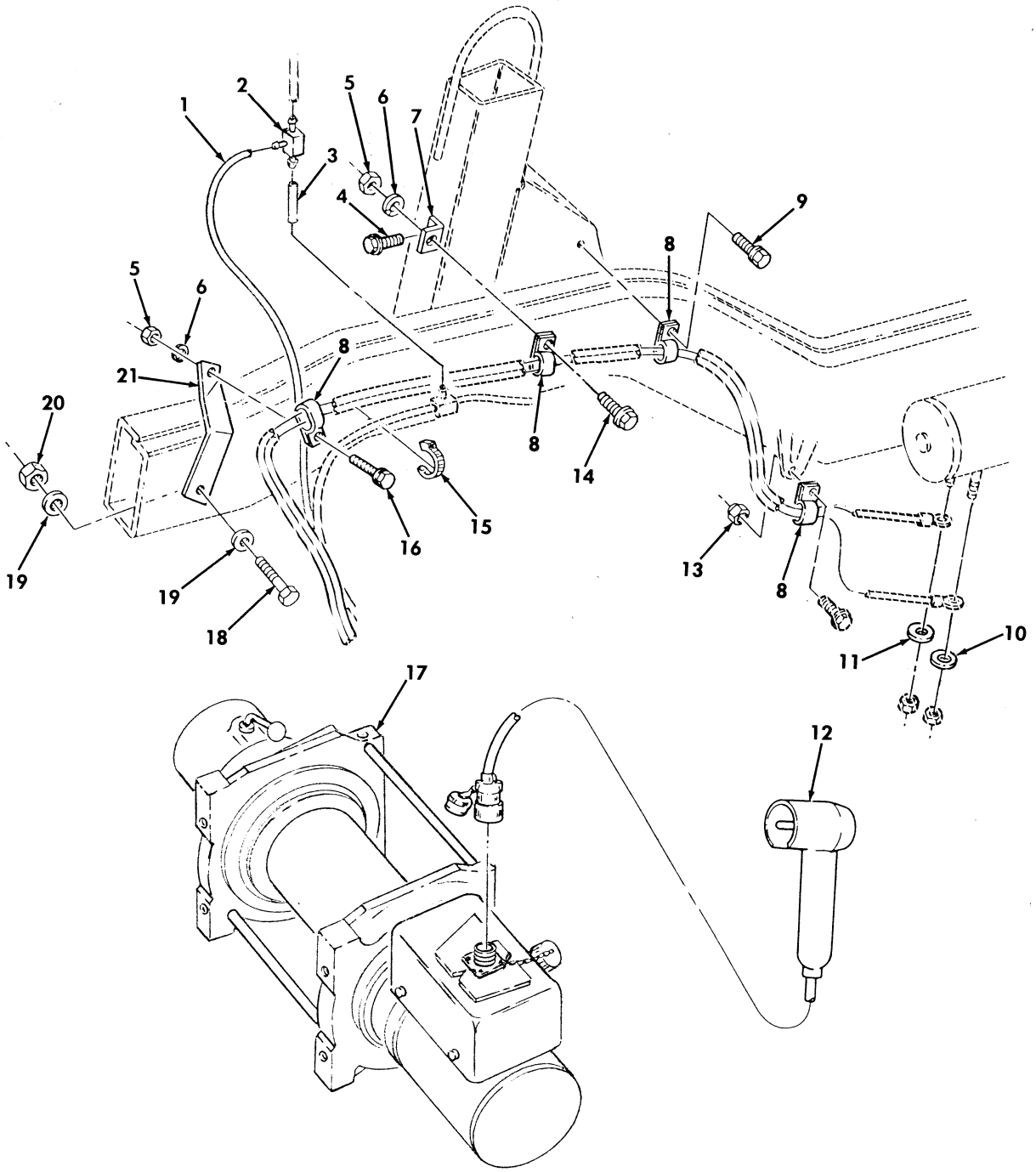

Figure 457. Kit, 9,000 Lb. Winch.

(1) ITEM NO	(2) SMR CODE	(3) NSN	(4) CAGEC	(5) PART NUMBER	(6) DESCRIPTION AND USABLE ON CODES(UOC)	(7) QTY
					GROUP 3307 SPECIAL PURPOSE KITS	
					FIG. 457 KIT,9,000 LB WINCH	
1	MOOZZ		19207	CPR104420-1-70	TUBING,NONMETALLIC MAKE FROM TUBING ,P/N CPR104420-1,70 INCHES LONG,PART OF KIT P/N 57K3217,PART OF KIT P/N 57K0285..... UOC:AVY,A11,A13,A14,A24,A25,A26,A27, BVY,B17,B18,B24,B25,C17,HVY,H11,H13, H14,H17,H18,H21,H24,H25,H26,H27,H28, MMM,NNN	1
2	PAOZZ	4730010035105	19207	12339973-1	TEE,HOSE PART OF KIT P/N 57K3217, PART OF KIT P/N 57K0285..... UOC:AVY,A11,A13,A14,A24,A25,A26,A27, BVY,B17,B18,B24,B25,C17,HVY,H11,H13, H14,H17,H18,H21,H24,H25,H26,H27,H28, MMM,NNN	1
3	MOOZZ		19207	CPR104420-1-4	TUBING,NONMETALLIC MAKE FROM TUBING ,P/N CPR104420-1,4 INCHES LONG,PART OF KIT P/N 57K3217,PART OF KIT P/N 57K0285..... UOC:AVY,A11,A13,A14,A24,A25,A26,A27, BVY,B17,B18,B24,B25,C17,HVY,H11,H13, H14,H17,H18,H21,H24,H25,H26,H27,H28, MMM,NNN	1
4	PAOZZ	5305011013312	96906	MS51851-126	SCREW,TAPPING 3/8-16 X 3/4,PART OF KIT P/N 57K3217,PART OF KIT P/N 57K0285..... UOC:AVY,A11,A13,A14,A24,A25,A26,A27, BVY,B17,B18,B24,B25,C17,HVY,H11,H13, H14,H17,H18,H21,H24,H25,H26,H27,H28, MMM,NNN	1
5	PAOZZ	5310009050762	96906	MS51967-3	NUT,PLAIN,HEXAGON 1/4-20,PART OF KIT P/N 57K3217,PART OF KIT P/N 57K0285..... UOC:AVY,A11,A13,A14,A24,A25,A26,A27, BVY,B17,B18,B24,B25,C17,HVY,H11,H13, H14,H17,H18,H21,H24,H25,H26,H27,H28, MMM,NNN	2
6	PAOZZ	5310005432705	96906	MS35338-27	WASHER,LOCK 1/4,PART OF KIT P/N 57K3217,PART OF KIT 57K0285..... UOC:AVY,A11,A13,A14,A24,A25,A26,A27, BVY,B17,B18,B24,B25,C17,HVY,H11,H13, H14,H17,H18,H21,H24,H25,H26,H27,H28, MMM,NNN	2
7	PAOZZ	5340011922256	19207	12338663	BRACKET,ANGLE PART OF KIT P/N 57K3217,PART OF KIT P/N 57K0285..... UOC:AVY,A11,A13,A14,A24,A25,A26,A27, BVY,B17,B18,B24,B25,C17,HVY,H11,H13, H14,H17,H18,H21,H24,H25,H26,H27,H28, MMM,NNN	1
8	PAOZZ	5340007385182	19207	7385182	CLAMP,LOOP PART OF KIT P/N 57K3217,	4

(1) ITEM NO	(2) SMR CODE	(3) NSN	(4) CAGEC	(5) PART NUMBER	(6) DESCRIPTION AND USABLE ON CODES(UOC)	(7) QTY
					PART OF KIT P/N 57K0285..... UOC:AVY,A11,A13,A14,A24,A25,A26,A27, BVY,B17,B18,B24,B25,C17,HVY,H11,H13, H14,H17,H18,H21,H24,H25,H26,H27,H28, MMM,NNN	
9	PAOZZ	5305001913640	96906	MS51851-85	SCREW,TAPPING 1/4-20 X 5/8,PART OF KIT P/N 57K3217,PART OF KIT P/N 57K0285..... UOC:AVY,A11,A13,A14,A24,A25,A26,A27, BVY,B17,B18,B24,B25,C17,HVY,H11,H13, H14,H17,H18,H21,H24,H25,H26,H27,H28, MMM,NNN	1
10	PAOZZ	5310012187137	96906	MS51415-7	WASHER,LOCK 3/8,PART OF KIT P/N 57K3217,PART OF KIT P/N 57K0285..... UOC:AVY,A11,A13,A14,A24,A25,A26,A27, BVY,B17,B18,B24,B25,C17,HVY,H11,H13, H14,H17,H18,H21,H24,H25,H26,H27,H28, MMM,NNN	1
11	PAOZZ	5310012167390	96906	MS51415-9	WASHER,LOCK 1/2,PART OF KIT P/N 57K3217,PART OF KIT P/N 57K0285..... UOC:AVY,A11,A13,A14,A24,A25,A26,A27, BVY,B17,B18,B24,B25,C17,HVY,H11,H13, H14,H17,H18,H21,H24,H25,H26,H27,H28, MMM,NNN	1
12	PAOZZ	2590014481105	34623	12447171	HANDLE ASSEMBLY,CON PART OF KIT P/N 57K3217,PART OF KIT P/N 57K0285..... UOC:AVY,A11,A13,A14,A24,A25,A26,A27, BVY,B17,B18,B24,B25,C17,HVY,H11,H13, H14,H17,H18,H21,H24,H25,H26,H27,H28, MMM,NNN	1
13	PAOZZ	5310011520598	24617	271172	NUT,SELF-LOCKING,AS 1/4-20,PART OF KIT P/N 57K3217,PART OF KIT P/N 57K0285..... UOC:AVY,A11,A13,A14,A24,A25,A26,A27, BVY,B17,B18,B24,B25,C17,HVY,H11,H13, H14,H17,H18,H21,H24,H25,H26,H27,H28, MMM,NNN	1
14	PAOZZ	5305000680508	80204	B1821BH025C075N	SCREW,CAP,HEXAGON H 1/4-20 X 3/4, PART OF KIT P/N 57K3217,PART OF KIT P/N 57K0285..... UOC:AVY,A11,A13,A14,A24,A25,A26,A27, BVY,B17,B18,B24,B25,C17,HVY,H11,H13, H14,H17,H18,H21,H24,H25,H26,H27,H28, MMM,NNN	1
15	PAOZZ	5975009856630	96906	MS3367-3-0	STRAP,TIEDOWN,ELECT PART OF KIT P/N 57K3217,PART OF KIT P/N 57K0285..... UOC:AVY,A11,A13,A14,A24,A25,A26,A27, BVY,B17,B18,B24,B25,C17,HVY,H11,H13, H14,H17,H18,H21,H24,H25,H26,H27,H28, MMM,NNN	4
16	PAOZZ	5305004890743	24617	9415477	SCREW,CAP,HEXAGON H 1/4-20 X 3/4, PART OF KIT P/N 57K3217,PART OF KIT P/N 57K0285.....	1

(1) ITEM NO	(2) SMR CODE	(3) NSN	(4) CAGEC	(5) PART NUMBER	(6) DESCRIPTION AND USABLE ON CODES(UOC)	(7) QTY
					UOC:AVY,A11,A13,A14,A24,A25,A26,A27, BVY,B17,B18,B24,B25,C17,HVY,H11,H13, H14,H17,H18,H21,H24,H25,H26,H27,H28, MMM,NNN	
* 17	PAOFF	2590014322691	27647	27855	WINCH,DRUM,VEHICLE 9000 LB,PART OF KIT P/N 57K3217,PART OF KIT P/N 57K0285..... UOC:AVY,A11,A13,A14,A24,A25,A26,A27, BVY,B17,B18,B24,B25,C17,HVY,H11,H13, H14,H17,H18,H21,H24,H25,H26,H27,H28, MMM,NNN	1
18	PAOZZ	5305007247248	80204	B1821BH063C375N	SCREW,CAP,HEXAGON H 5/8-11 X 3.75, PART OF KIT P/N 57K3217,PART OF KIT P/N 57K0285..... UOC:AVY,A11,A13,A14,A24,A25,A26,A27, BVY,B17,B18,B24,B25,C17,HVY,H11,H13, H14,H17,H18,H21,H24,H25,H26,H27,H28, MMM,NNN	6
19	PAOZZ	5310011517347	24617	2436167	WASHER,FLAT 5/8,PART OF KIT P/N 57K3217,PART OF KIT P/N 57K0285..... UOC:AVY,A11,A13,A14,A24,A25,A26,A27, BVY,B17,B18,B24,B25,C17,HVY,H11,H13, H14,H17,H18,H21,H24,H25,H26,H27,H28, MMM,NNN	12
20	PAOZZ	5310000614651	96906	MS51943-43	NUT,SELF-LOCKING,HE 5/8-11,PART OF KIT P/N 57K3217,PART OF KIT P/N 57K0285..... UOC:AVY,A11,A13,A14,A24,A25,A26,A27, BVY,B17,B18,B24,B25,C17,HVY,H11,H13, H14,H17,H18,H21,H24,H25,H26,H27,H28, MMM,NNN	6
21	PAOZZ	5340012669173	19207	12338481	BRACKET,DOUBLE ANGL PART OF KIT P/N 57K3217,PART OF KIT P/N 57K0285..... UOC:AVY,A11,A13,A14,A24,A25,A26,A27, BVY,B17,B18,B24,B25,C17,HVY,H11,H13, H14,H17,H18,H21,H24,H25,H26,H27,H28, MMM,NNN	1
KIT	PDOZZ	2590014180310	19207	57K0285	ACCESSORY KIT,WINCH 9000 LB..... UOC:BVY,B24,B25,C17,NNN	1
					BRACKET (1) 457-7	
					BRACKET,DOUBLE ANGL(1) 457-21	
					BRACKET,WIRE ROPE G(1) 456-7	
					CLAMP,LOOP (4) 457-8	
					DECAL,WARNING (1) 456-2	
					FRAME SECTION,STRUC(1) 456-1	
					FRAME SECTION,STRUC(1) 456-1	
					FRAME SECTION,STRUC(1) 456-21	
					FRAME SECTION,STRUC(1) 456-21	
					HANDLE ASSEMBLY,CON(1) 457-12	
					NUT,PLAIN,HEXAGON (2) 457-5	
					NUT,SELF-LOCKING,AS(1) 457-13	
					NUT,SELF-LOCKING,HE(4) 456-18	
					NUT,SELF-LOCKING,HE(8) 456-17	

(1) ITEM NO	(2) SMR CODE	(3) NSN	(4) CAGEC	(5) PART NUMBER	(6) DESCRIPTION AND USABLE ON CODES(UOC)	(7) QTY
					NUT,SELF-LOCKING,HE(2) 456-20	
					SCREW,CAP,HEXAGON H(1) 457-16	
					SCREW,CAP,HEXAGON H(6) 456-5	
					SCREW,CAP,HEXAGON H(4) 456-15	
					SCREW,CAP,HEXAGON H(4) 456-22	
					SCREW,CAP,HEXAGON H(2) 456-23	
					SCREW,CAP,HEXAGON H(4) 456-24	
					SCREW,CAP,HEXAGON H(1) 457-14	
					SCREW,CAP,HEXAGON H(4) 456-6	
					SCREW,CAP,HEXAGON H(6) 457-18	
					SCREW,TAPPING (1) 457-9	
					SCREW,TAPPING (1) 457-4	
					STRAP,TIEDOWN,ELECT(4) 457-15	
					TEE,HOSE (1) 457-2	
					TUBING,NONMETALLIC (1) 457-1	
					TUBING,NONMETALLIC (1) 457-3	
					WASHER,FLAT (8) 456-19	
					WASHER,FLAT (4) 456-16	
					WASHER,FLAT (18) 456-4	
					WASHER,FLAT (12) 457-19	
					WASHER,LOCK (1) 457-11	
					WASHER,LOCK (1) 457-10	
					WASHER,LOCK (2) 457-6	
					WINCH (1) 457-17	
*	AOOZZ	2590014182135	19207	57K3217	ACCESSORY KIT,WINCH 9000 LB.....	1
					UOC:AVY,A11,A13,A14,A24,A25,A26,A27, B17,B18,HVY,H11,H13,H14,H17,H18,H21, H24,H25,H26,H27,H28,MMM	
					BRACKET (1) 457-7	
					BRACKET,DOUBLE ANGL(1) 457-21	
					BRACKET,WIRE ROPE G(1) 456-7	
					BUMPER,FRONT (1) 456-3	
					CLAMP,LOOP (4) 457-8	
					DECAL,WARNING (1) 456-2	
					FRAME SECTION,STRUC(1) 456-1	
					FRAME SECTION,STRUC(1) 456-1	
					FRAME SECTION,STRUC(1) 456-21	
					FRAME SECTION,STRUC(1) 456-21	
					HANDLE ASSEMBLY,CON(1) 457-12	
					NUT,PLAIN,HEXAGON (2) 457-5	
					NUT,SELF-LOCKING,AS(1) 457-13	
					NUT,SELF-LOCKING,HE(4) 456-18	
					NUT,SELF-LOCKING,HE(8) 456-17	
					NUT,SELF-LOCKING,HE(6) 457-20	
					NUT,SELF-LOCKING,HE(2) 456-20	
					SCREW,CAP,HEXAGON H(6) 456-5	
					SCREW,CAP,HEXAGON H(1) 457-16	
					SCREW,CAP,HEXAGON H(4) 456-15	
					SCREW,CAP,HEXAGON H(4) 456-22	
					SCREW,CAP,HEXAGON H(2) 456-23	
					SCREW,CAP,HEXAGON H(4) 456-24	
					SCREW,CAP,HEXAGON H(1) 457-14	
					SCREW,CAP,HEXAGON H(4) 456-6	

(1) ITEM NO	(2) SMR CODE	(3) NSN	(4) CAGEC	(5) PART NUMBER	(6) DESCRIPTION AND USABLE ON CODES(UOC)	(7) QTY
					SCREW,CAP,HEXAGON H(1)	457-14
					SCREW,CAP,HEXAGON H(4)	456-6
					SCREW,CAP,HEXAGON H(6)	457-18
					SCREW,TAPPING (1)	457-9
					SCREW,TAPPING (1)	457-4
					STRAP,TIEDOWN,ELECT(4)	457-15
					TEE,HOSE (1)	457-2
					TUBING,NONMETALLIC (1)	457-1
					TUBING,NONMETALLIC (1)	457-3
					WASHER,FLAT (8)	456-19
					WASHER,FLAT (4)	456-16
					WASHER,FLAT (18)	456-4
					WASHER,FLAT (12)	457-19
					WASHER,LOCK (1)	457-11
					WASHER,LOCK (1)	457-10
					WASHER,LOCK (2)	457-6
					WINCH (1)	457-17

END OF FIGURE

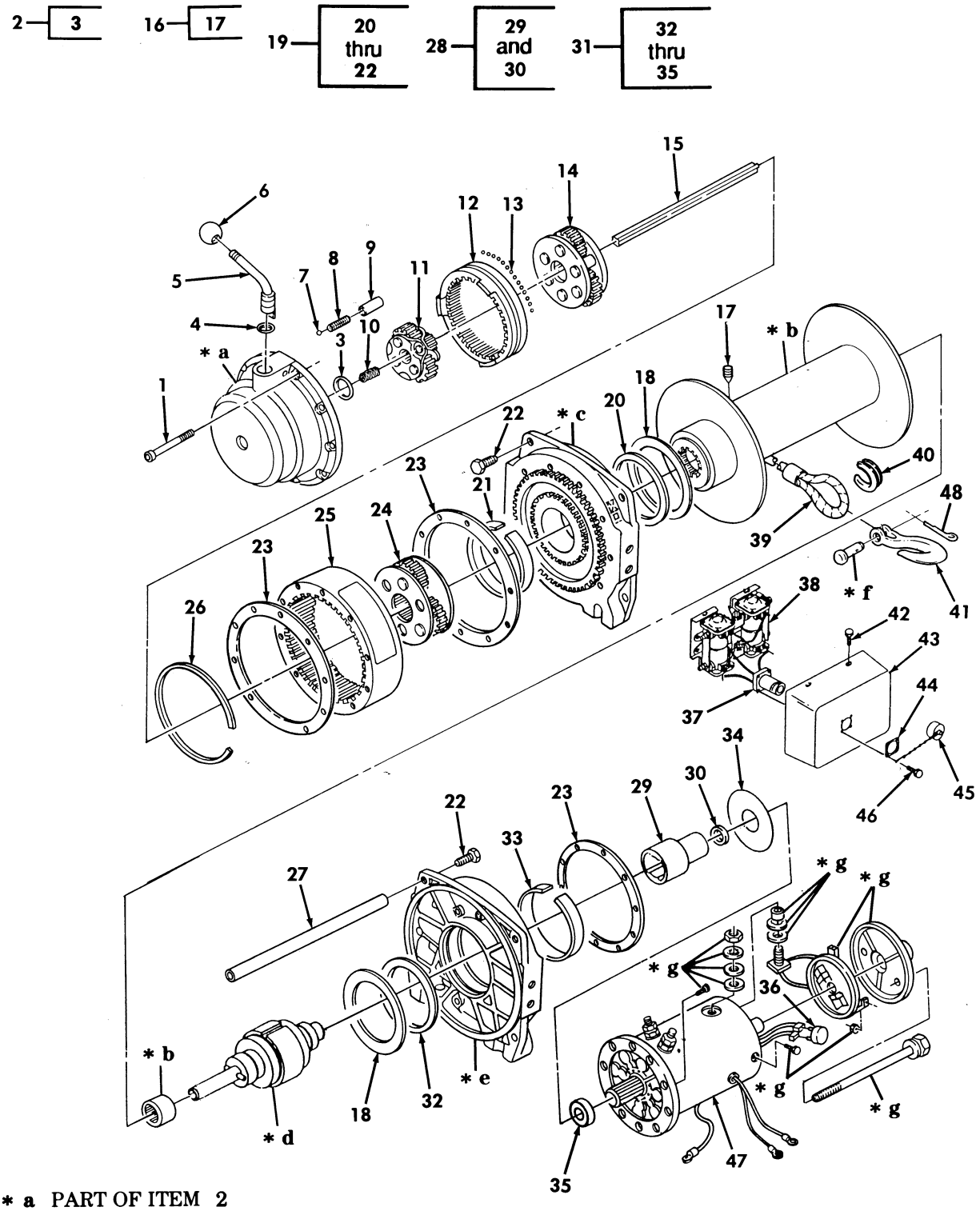

* a PART OF ITEM 2
* b PART OF ITEM 16
* c PART OF ITEM 19
* d PART OF ITEM 28
* e PART OF ITEM 31
* f PART OF ITEM 41
* g PART OF ITEM 47

Figure 458. 9,000 Lb Winch Assembly.

(1) ITEM NO	(2) SMR CODE	(3) NSN	(4) CAGEC	(5) PART NUMBER	(6) DESCRIPTION AND USABLE ON CODES(UOC)	(7) QTY
					GROUP 3307 SPECIAL PURPOSE KITS	
					FIG. 458 9,000 LB WINCH ASSEMBLY	
1	PAFZZ	5305013091521	27647	15603	SCREW,CAP,SOCKET HE 1/4-20 X 3.00.. UOC:AVY,A11,A13,A14,A24,A25,A26,A27, BVY,B17,B18,B24,B25,C17,HVY,H11,H13, H14,H17,H18,H21,H24,H25,H26,H27,H28, MMM,NNN	10
2	PAFZZ	3040014441756	27647	34384	HOUSING,MECHANICAL..... UOC:AVY,A11,A13,A14,A24,A25,A26,A27, BVY,B17,B18,B24,B25,C17,HVY,H11,H13, H14,H17,H18,H21,H24,H25,H26,H27,H28, MMM,NNN	1
3	PAFZZ	3040013076157	27647	21009	.THRUST PLATE,CLUTCH..... UOC:AVY,A11,A13,A14,A24,A25,A26,A27, BVY,B17,B18,B24,B25,C17,HVY,H11,H13, H14,H17,H18,H21,H24,H25,H26,H27,H28, MMM,NNN	1
4	PAFZZ	5330014455285	27647	15605	O-RING..... UOC:AVY,A11,A13,A14,A24,A25,A26,A27, BVY,B17,B18,B24,B25,C17,HVY,H11,H13, H14,H17,H18,H21,H24,H25,H26,H27,H28, MMM,NNN	1
5	PAFZZ	3040014463689	27647	31262	LEVER,MANUAL CONTRO..... UOC:AVY,A11,A13,A14,A24,A25,A26,A27, BVY,B17,B18,B24,B25,C17,HVY,H11,H13, H14,H17,H18,H21,H24,H25,H26,H27,H28, MMM,NNN	1
6	PAFZZ	5355012116991	27647	15604	KNOB..... UOC:AVY,A11,A13,A14,A24,A25,A26,A27, BVY,B17,B18,B24,B25,C17,HVY,H11,H13, H14,H17,H18,H21,H24,H25,H26,H27,H28, MMM,NNN	1
7	PAFZZ	3110014444020	27647	1834	BALL,BEARING 1/4 DIA..... UOC:AVY,A11,A13,A14,A24,A25,A26,A27, BVY,B17,B18,B24,B25,C17,HVY,H11,H13, H14,H17,H18,H21,H24,H25,H26,H27,H28, MMM,NNN	1
8	PAFZZ	5360014200480	27646	1833	SPRING,HELICAL,COMP..... UOC:AVY,A11,A13,A14,A24,A25,A26,A27, BVY,B17,B18,B24,B25,C17,HVY,H11,H13, H14,H17,H18,H21,H24,H25,H26,H27,H28, MMM,NNN	1
9	PAFZZ	5365013069955	27647	15686	SPACER,SLEEVE..... UOC:AVY,A11,A13,A14,A24,A25,A26,A27, BVY,B17,B18,B24,B25,C17,HVY,H11,H13, H14,H17,H18,H21,H24,H25,H26,H27,H28, MMM,NNN	1
10	PAFZZ	3020014441359	27647	24832	GEAR,SPUR..... UOC:AVY,A11,A13,A14,A24,A25,A26,A27, BVY,B17,B18,B24,B25,C17,HVY,H11,H13, H14,H17,H18,H21,H24,H25,H26,H27,H28,	

(1) ITEM NO	(2) SMR CODE	(3) NSN	(4) CAGEC	(5) PART NUMBER	(6) DESCRIPTION AND USABLE ON CODES(UOC)	(7) QTY
					MMM,NNN	
11	PAFZZ	3010014444018	27647	15643	CARRIER,GEAR ASSEMB..... UOC:AVY,A11,A13,A14,A24,A25,A26,A27, BVY,B17,B18,B24,B25,C17,HVY,H11,H13, H14,H17,H18,H21,H24,H25,H26,H27,H28, MMM,NNN	1
12	PAFZZ	3020014464387	27647	14916	GEAR,INTERNAL..... UOC:AVY,A11,A13,A14,A24,A25,A26,A27, BVY,B17,B18,B24,B25,C17,HVY,H11,H13, H14,H17,H18,H21,H24,H25,H26,H27,H28, MMM,NNN	1
13	PAFZZ	3110014444100	27647	22350	BALL,BEARING 3/16 DIA (85 BALLS)... UOC:AVY,A11,A13,A14,A24,A25,A26,A27, BVY,B17,B18,B24,B25,C17,HVY,H11,H13, H14,H17,H18,H21,H24,H25,H26,H27,H28, MMM,NNN	1
14	PAFZZ	3010014444019	27647	24563	CARRIER,GEAR ASSEMB..... UOC:AVY,A11,A13,A14,A24,A25,A26,A27, BVY,B17,B18,B24,B25,C17,HVY,H11,H13, H14,H17,H18,H21,H24,H25,H26,H27,H28, MMM,NNN	1
15	PAFZZ	3040014463684	27647	32209	SHAFT,STRAIGHT OUTPUT..... UOC:AVY,A11,A13,A14,A24,A25,A26,A27, BVY,B17,B18,B24,B25,C17,HVY,H11,H13, H14,H17,H18,H21,H24,H25,H26,H27,H28, MMM,NNN	1
16	PAFZZ	2590014465962	27647	32231	REEL,CABLE..... UOC:AVY,A11,A13,A14,A24,A25,A26,A27, BVY,B17,B18,B24,B25,C17,HVY,H11,H13, H14,H17,H18,H21,H24,H25,H26,H27,H28, MMM,NNN	1
17	PAFZZ	5305014485074	27647	36974	.SETSCREW M10..... UOC:AVY,A11,A13,A14,A24,A25,A26,A27, BVY,B17,B18,B24,B25,C17,HVY,H11,H13, H14,H17,H18,H21,H24,H25,H26,H27,H28, MMM,NNN	1
18	PAFZZ	3120014478663	27647	30277	BEARING,WASHER,THRU..... UOC:AVY,A11,A13,A14,A24,A25,A26,A27, BVY,B17,B18,B24,B25,C17,HVY,H11,H13, H14,H17,H18,H21,H24,H25,H26,H27,H28, MMM,NNN	2
19	PAFZZ	2590014465957	27647	32237	HOLDER,CABLE REEL..... UOC:AVY,A11,A13,A14,A24,A25,A26,A27, BVY,B17,B18,B24,B25,C17,HVY,H11,H13, H14,H17,H18,H21,H24,H25,H26,H27,H28, MMM,NNN	1
20	PAFZA	5330014464696	27647	30275	.PACKING ASSEMBLY..... UOC:AVY,A11,A13,A14,A24,A25,A26,A27, BVY,B17,B18,B24,B25,C17,HVY,H11,H13, H14,H17,H18,H21,H24,H25,H26,H27,H28, MMM,NNN	2
21	PAFZZ	3120014478658	27647	30274	.BUSHING,SLEEVE..... UOC:AVY,A11,A13,A14,A24,A25,A26,A27,	2

(1) ITEM NO	(2) SMR CODE	(3) NSN	(4) CAGEC	(5) PART NUMBER	(6) DESCRIPTION AND USABLE ON CODES(UOC)	(7) QTY
					BVY,B17,B18,B24,B25,C17,HVY,H11,H13, H14,H17,H18,H21,H24,H25,H26,H27,H28, MMM,NNN	
22	PAFZZ	5305014485080	27647	30328	.SCREW,MACHINE 3/8-16 X .75..... UOC:AVY,A11,A13,A14,A24,A25,A26,A27, BVY,B17,B18,B24,B25,C17,HVY,H11,H13, H14,H17,H18,H21,H24,H25,H26,H27,H28, MMM,NNN	6
23	PAFZZ	5330013067887	27647	14964	GASKET..... UOC:AVY,A11,A13,A14,A24,A25,A26,A27, BVY,B17,B18,B24,B25,C17,HVY,H11,H13, H14,H17,H18,H21,H24,H25,H26,H27,H28, MMM,NNN	3
24	PAFZZ	3010013064113	27647	15647	GEAR ASSEMBLY,SPEED..... UOC:AVY,A11,A13,A14,A24,A25,A26,A27, BVY,B17,B18,B24,B25,C17,HVY,H11,H13, H14,H17,H18,H21,H24,H25,H26,H27,H28, MMM,NNN	1
25	PAFZZ	3020014463695	27647	32239	GEAR,INTERNAL..... UOC:AVY,A11,A13,A14,A24,A25,A26,A27, BVY,B17,B18,B24,B25,C17,HVY,H11,H13, H14,H17,H18,H21,H24,H25,H26,H27,H28, MMM,NNN	1
26	PAFZZ	5365014266643	27647	30326	SPACER,RING..... UOC:AVY,A11,A13,A14,A24,A25,A26,A27, BVY,B17,B18,B24,B25,C17,HVY,H11,H13, H14,H17,H18,H21,H24,H25,H26,H27,H28, MMM,NNN	1
27	PAFZZ	5365014340186	27647	32208	SPACER,SLEEVE..... UOC:AVY,A11,A13,A14,A24,A25,A26,A27, BVY,B17,B18,B24,B25,C17,HVY,H11,H13, H14,H17,H18,H21,H24,H25,H26,H27,H28, MMM,NNN	3
28	PAFZZ	3950014351632	34623	5714499	BRAKE AND CLUTCH AS ELECTRIC..... UOC:AVY,A11,A13,A14,A24,A25,A26,A27, BVY,B17,B18,B24,B25,C17,HVY,H11,H13, H14,H17,H18,H21,H24,H25,H26,H27,H28, MMM,NNN	1
29	PAFZZ	3010014295333	27647	30260	.COUPLING,SHAFT,RIGI..... UOC:AVY,A11,A13,A14,A24,A25,A26,A27, BVY,B17,B18,B24,B25,C17,HVY,H11,H13, H14,H17,H18,H21,H24,H25,H26,H27,H28, MMM,NNN	1
30	PAFZZ	3120014352560	27647	15271	.BEARING,WASHER,THRU..... UOC:AVY,A11,A13,A14,A24,A25,A26,A27, BVY,B17,B18,B24,B25,C17,HVY,H11,H13, H14,H17,H18,H21,H24,H25,H26,H27,H28, MMM,NNN	1
31	PAFZZ	3950014351014	27647	32236	HOUSING PART,MECHAN..... UOC:AVY,A11,A13,A14,A24,A25,A26,A27, BVY,B17,B18,B24,B25,C17,HVY,H11,H13, H14,H17,H18,H21,H24,H25,H26,H27,H28, MMM,NNN	1

(1) ITEM NO	(2) SMR CODE	(3) NSN	(4) CAGEC	(5) PART NUMBER	(6) DESCRIPTION AND USABLE ON CODES(UOC)	(7) QTY
32	PAFZA	5330014464696	27647	30275	.PACKING ASSEMBLY..... UOC:AVY,A11,A13,A14,A24,A25,A26,A27, BVY,B17,B18,B24,B25,C17,HVY,H11,H13, H14,H17,H18,H21,H24,H25,H26,H27,H28, MMM,NNN	2
33	PAFZZ	3120014478658	27647	30274	.BUSHING,SLEEVE..... UOC:AVY,A11,A13,A14,A24,A25,A26,A27, BVY,B17,B18,B24,B25,C17,HVY,H11,H13, H14,H17,H18,H21,H24,H25,H26,H27,H28, MMM,NNN	2
34	PAFZZ	3120014352495	27647	32062	.BEARING,WASHER,THRU..... UOC:AVY,A11,A13,A14,A24,A25,A26,A27, BVY,B17,B18,B24,B25,C17,HVY,H11,H13, H14,H17,H18,H21,H24,H25,H26,H27,H28, MMM,NNN	1
35	PAFZZ	3110001089247	19207	900529	.BEARING,BALL,ANNULA..... UOC:AVY,A11,A13,A14,A24,A25,A26,A27, BVY,B17,B18,B24,B25,C17,HVY,H11,H13, H14,H17,H18,H21,H24,H25,H26,H27,H28, MMM,NNN	1
36	PAFZZ	6110014345562	27647	24800	PROTECTOR,THERMAL-O..... UOC:AVY,A11,A13,A14,A24,A25,A26,A27, BVY,B17,B18,B24,B25,C17,HVY,H11,H13, H14,H17,H18,H21,H24,H25,H26,H27,H28, MMM,NNN	1
37	PAFZZ	5935014315656	27647	31597	CONNECTOR,RECEPTACL..... UOC:AVY,A11,A13,A14,A24,A25,A26,A27, BVY,B17,B18,B24,B25,C17,HVY,H11,H13, H14,H17,H18,H21,H24,H25,H26,H27,H28, MMM,NNN	1
38	PAFZZ	5945014315195	27647	31604	SOLENOID ASSEMBLY 24 VDC..... UOC:AVY,A11,A13,A14,A24,A25,A26,A27, BVY,B17,B18,B24,B25,C17,HVY,H11,H13, H14,H17,H18,H21,H24,H25,H26,H27,H28, MMM,NNN	1
39	PAFZZ	4010014264536	27647	27569	WIRE ROPE ASSEMBLY, 3/8" EIPS X UOC:AVY,A11,A13,A14,A24,A25,A26,A27, BVY,B17,B18,B24,B25,C17,HVY,H11,H13, H14,H17,H18,H21,H24,H25,H26,H27,H28, MMM,NNN	1
40	PAFZZ	4030012560471	75535	G-408-3/8	THIMBLE,ROPE..... UOC:AVY,A11,A13,A14,A24,A25,A26,A27, BVY,B17,B18,B24,B25,C17,HVY,H11,H13, H14,H17,H18,H21,H24,H25,H26,H27,H28, MMM,NNN	1
41	PAFZZ	4030014264537	27647	29519	HOOK,HOIST W/CLEVIS AND COTTER PINS UOC:AVY,A11,A13,A14,A24,A25,A26,A27, BVY,B17,B18,B24,B25,C17,HVY,H11,H13, H14,H17,H18,H21,H24,H25,H26,H27,H28, MMM,NNN	1
42	PAFZZ	5305012102309	27647	8548	SCREW,TAPPING 10-24 X 3/8..... UOC:AVY,A11,A13,A14,A24,A25,A26,A27, BVY,B17,B18,B24,B25,C17,HVY,H11,H13,	3

(1) ITEM NO	(2) SMR CODE	(3) NSN	(4) CAGEC	(5) PART NUMBER	(6) DESCRIPTION AND USABLE ON CODES(UOC)	(7) QTY
					H14,H17,H18,H21,H24,H25,H26,H27,H28, MMM,NNN	
43	PAFZA	5340014300037	27647	31585	COVER,PROTECTIVE,DU..... UOC:AVY,A11,A13,A14,A24,A25,A26,A27, BVY,B17,B18,B24,B25,C17,HVY,H11,H13, H14,H17,H18,H21,H24,H25,H26,H27,H28, MMM,NNN	1
* 44	PAOZZ	5340014861005	27647	31293	CLIP,RETAINING..... UOC:AVY,A11,A13,A14,A24,A25,A26,A27, BVY,B17,B18,B24,B25,C17,HVY,H11,H13, H14,H17,H18,H21,H24,H25,H26,H27,H28, MMM,NNN	1
45	PAOZZ	5935014605508	71468	CA121003-3	COVER,ELECTRICAL CO..... UOC:AVY,A11,A13,A14,A24,A25,A26,A27, BVY,B17,B18,B24,B25,C17,HVY,H11,H13, H14,H17,H18,H21,H24,H25,H26,H27,H28, MMM,NNN	1
46	PAFZZ	5305014286635	27647	31625	SCREW,MACHINE M4 X 10..... UOC:AVY,A11,A13,A14,A24,A25,A26,A27, BVY,B17,B18,B24,B25,C17,HVY,H11,H13, H14,H17,H18,H21,H24,H25,H26,H27,H28, MMM,NNN	4
47	PAFZZ	6105014341729	27647	32235	MOTOR,DIRECT CURREN 24 VDC..... UOC:AVY,A11,A13,A14,A24,A25,A26,A27, BVY,B17,B18,B24,B25,C17,HVY,H11,H13, H14,H17,H18,H21,H24,H25,H26,H27,H28, MMM,NNN	1
* 48	PAFZZ	5315001879384	18631	PDG6120-1/8-1-1/ 4	PIN,COTTER..... UOC:AVY,A11,A13,A14,A24,A25,A26,A27, BVY,B17,B18,B24,B25,C17,HVY,H11,H13, H14,H17,H18,H21,H24,H25,H26,H27,H28, MMM,NNN	1

END OF FIGURE

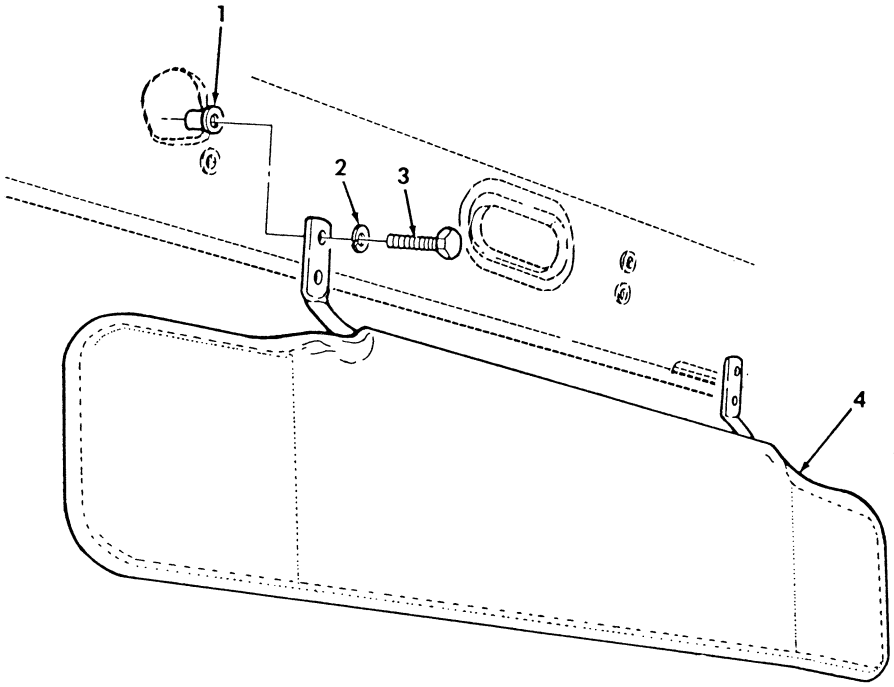

Figure 459. Modification Kit, Sun Visor.

(1) ITEM NO	(2) SMR CODE	(3) NSN	(4) CAGEC	(5) PART NUMBER	(6) DESCRIPTION AND USABLE ON CODES(UOC)	(7) QTY
					GROUP 3307 SPECIAL PURPOSE KITS	
					FIG. 459 MODIFICATION KIT,SUN VISOR	
1	PAOZZ	5310014113422	78276	ALS4-420-165	NUT,PLAIN,BLIND RIV 1/4-20 PART OF KIT P/N 57K3209..... UOC:AVY,A11,A13,A14,A15,A20,A24,A25, A26,A27,B16,B17,B18,HVY,H13,H14,H15, H16,H17,H18,H20,H21,H24,H25,H26,H27, H28	8
2	PAOZZ	5310006379541	96906	MS35338-46	WASHER,LOCK 1/4 PART OF KIT P/N 57K3209..... UOC:AVY,A11,A13,A14,A15,A20,A24,A25, A26,A27,B16,B17,B18,HVY,H13,H14,H15, H16,H17,H18,H20,H21,H24,H25,H26,H27, H28	8
3	PAOZZ	5305002253843	80204	B1821BH025C100N	SCREW,CAP,HEXAGON H 1/4-20 PART OF KIT P/N 57K3209..... UOC:AVY,A11,A13,A14,A15,A20,A24,A25, A26,A27,B16,B17,B18,HVY,H13,H14,H15, H16,H17,H18,H20,H21,H24,H25,H26,H27, H28	8
4	PAOZZ	2540014108793	34623	12446819	VISOR,SUN,VEHICLE PART OF KIT P/N 57K3209..... UOC:AVY,A11,A13,A14,A15,A20,A24,A25, A26,A27,B16,B17,B18,HVY,H13,H14,H15, H16,H17,H18,H20,H21,H24,H25,H26,H27, H28	2
KIT	PDOZZ	2540014319182	19207	57K3209	VISOR,SUN,VEHICLE.....	1
					NUT,PLAIN,BLIND RIV(8) 459-1	
					SCREW,CAP,HEXAGON H(8) 459-3	
					VISOR,SUN,VEHICLE (2) 459-4	
					WASHER,LOCK (8) 459-2	

END OF FIGURE

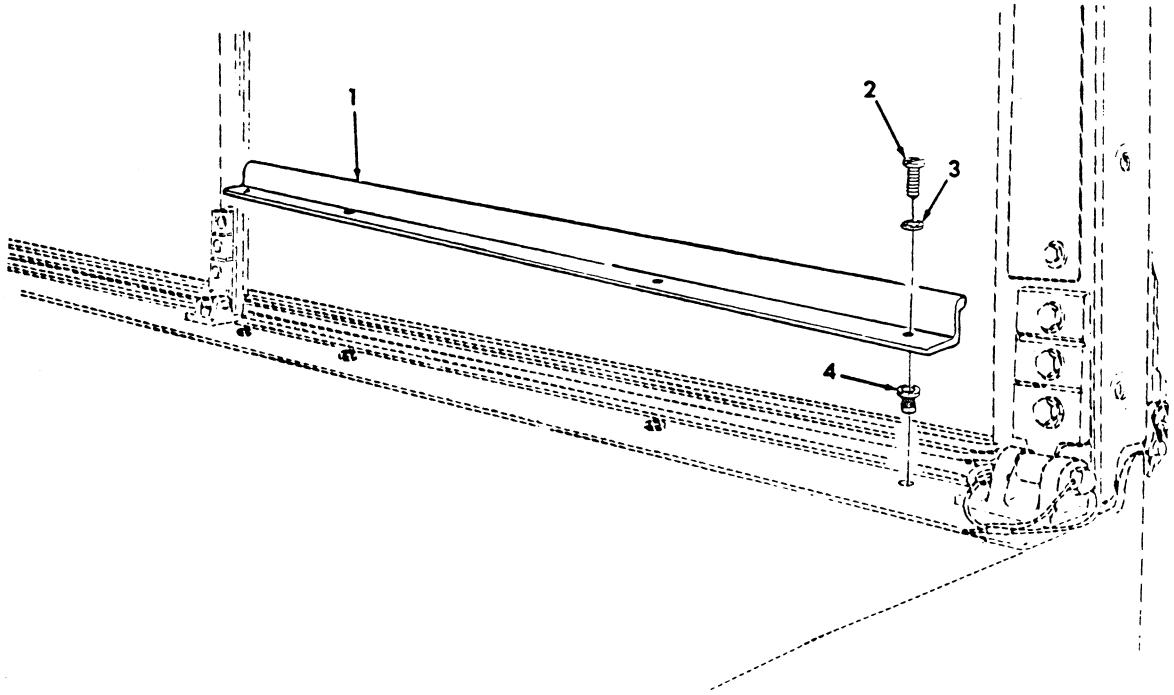

Figure 460. Modification Kit, Windshield Retainer.

(1) ITEM NO	(2) SMR CODE	(3) NSN	(4) CAGEC	(5) PART NUMBER	(6) DESCRIPTION AND USABLE ON CODES(UOC)	(7) QTY
					GROUP 3307 SPECIAL PURPOSE KITS	
					FIG. 460 MODIFICATION KIT, WINDSHIELD RETAINER	
1	PAOZZ	2510014110652	34623	12447029	FRAME,WINDOW,VEHICU PART OF KIT P/N 57K3206..... UOC:AVY,A11,A13,A14,A15,A20,A24,A25, A26,A27,B16,B17,B18,HVY,H11,H13,H14, H15,H16,H17,H18,H20,H21,H24,H25,H26, H27,H28,MMM	2
2	PAOZZ	5305002400194	96906	MS51849-76	SCREW,MACHINE #10-24 X 3/4 PART OF KIT P/N 57K3206..... UOC:AVY,A11,A13,A14,A15,A20,A24,A25, A26,A27,B16,B17,B18,HVY,H11,H13,H14, H15,H16,H17,H18,H20,H21,H24,H25,H26, H27,H28,MMM	8
3	PAOZZ	5310000453296	96906	MS35338-43	WASHER,LOCK PART OF KIT P/N 57K3206. UOC:AVY,A11,A13,A14,A15,A20,A24,A25, A26,A27,B16,B17,B18,HVY,H11,H13,H14, H15,H16,H17,H18,H20,H21,H24,H25,H26, H27,H28,MMM	8
4	PAOZZ	5325014110066	78276	ALS4-1024-130	INSERT,SCREW THREAD PART OF KIT P/N 57K3206..... UOC:AVY,A11,A13,A14,A15,A20,A24,A25, A26,A27,B16,B17,B18,HVY,H11,H13,H14, H15,H16,H17,H18,H20,H21,H24,H25,H26, H27,H28,MMM	8
KIT	PDOZZ	2510014311339	19207	57K3206	PARTS KIT,WINDSHIEL..... UOC:AVY,A11,A13,A14,A15,A20,A24,A25, A26,A27,B16,B17,B18,HVY,H11,H13,H14, H15,H16,H17,H18,H20,H21,H24,H25,H26, H27,H28,MMM	1
					FRAME,WINDOW,VEHICU(2) 460-1	
					INSERT,SCREW THREAD(8) 460-4	
					SCREW,MACHINE (8) 460-2	
					WASHER,LOCK (8) 460-3	

END OF FIGURE

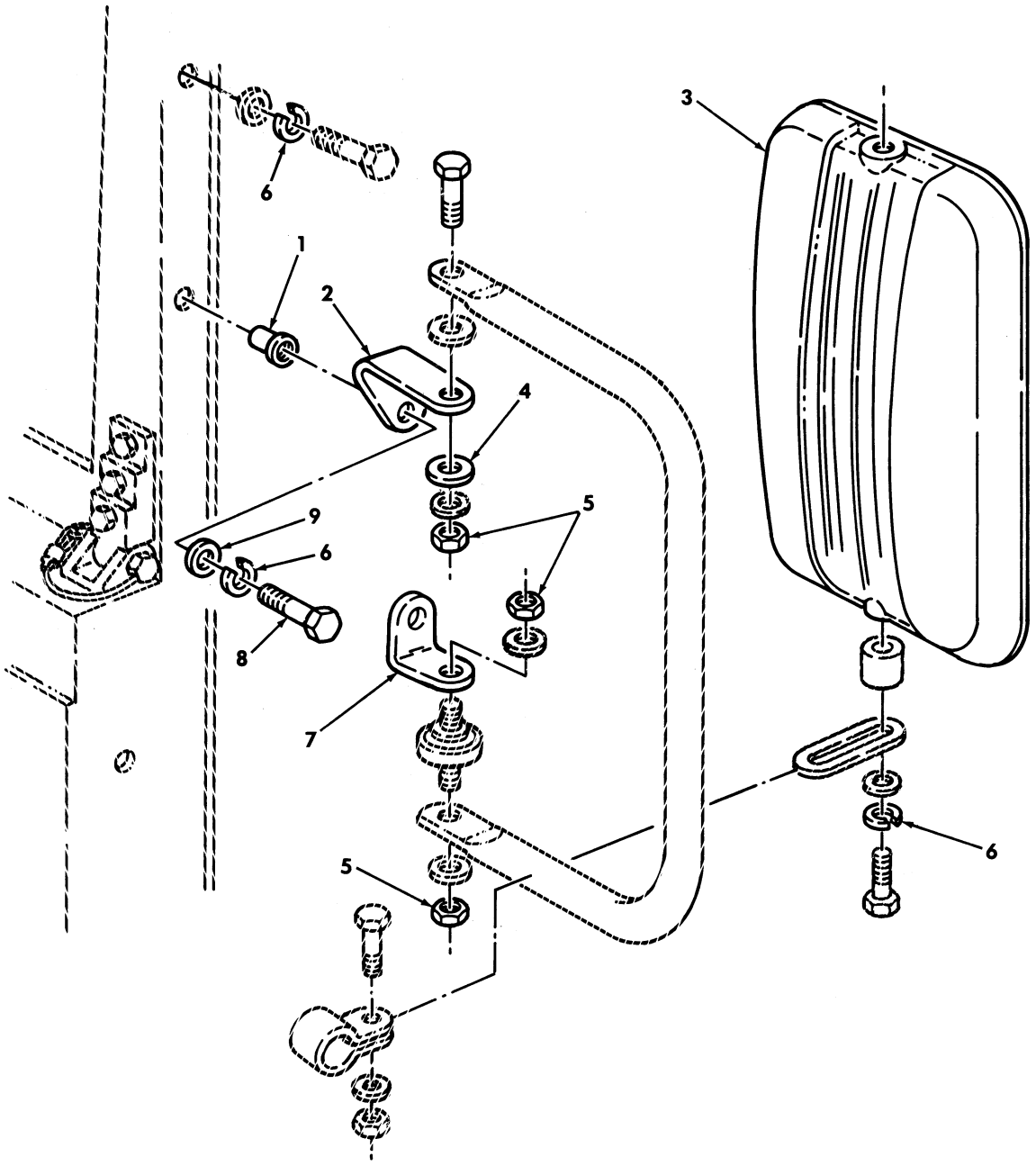

Figure 461. Left Rearview Mirror Relocation Kit.

(1) ITEM NO	(2) SMR CODE	(3) NSN	(4) CAGEC	(5) PART NUMBER	(6) DESCRIPTION AND USABLE ON CODES(UOC)	(7) QTY
					GROUP 3307 SPECIAL PURPOSE KITS	
					FIG. 461 LEFT REARVIEW MIRROR RELOCATION KIT	
1	PAOZZ	5310014133276	78276	ALS4-518-150	NUT,PLAIN,BLIND RIV PART OF KIT P/N 57K3213..... UOC:AVY,A11,A13,A14,A15,A20,A24,A25, A26,A27,B16,B17,B18,HVY,H11,H13,H14, H15,H16,H17,H18,H20,H21,H24,H25,H26, H27,H28,MMM	2
2	PAOZZ	5340014086456	19207	12343062	BRACKET,ANGLE PART OF KIT P/N 57K3213..... UOC:AVY,A11,A13,A14,A15,A20,A24,A25, A26,A27,B16,B17,B18,HVY,H11,H13,H14, H15,H16,H17,H18,H20,H21,H24,H25,H26, H27,H28,MMM	1
* 3	PAOZZ	2540014108794	70082	1351	MIRROR HEAD,VEHICUL GREEN PART OF KIT P/N 57K3213..... UOC:AVY,A11,A13,A14,A15,A20,A24,A25, A26,A27,B16,B17,B18,HVY,H11,H13,H14, H15,H16,H17,H18,H20,H21,H24,H25,H26, H27,H28,MMM	1
4	PAOZZ	5310013133562	96906	MS51859-20	WASHER,FLAT PART OF KIT P/N 57K3213. UOC:AVY,A11,A13,A14,A15,A20,A24,A25, A26,A27,B16,B17,B18,HVY,H11,H13,H14, H15,H16,H17,H18,H20,H21,H24,H25,H26, H27,H28,MMM	2
5	PAOZZ	5310012490904	81349	M45913/3-6CG8P	NUT,SELF-LOCKING,HE PART OF KIT P/N 57K3213..... UOC:AVY,A11,A13,A14,A15,A20,A24,A25, A26,A27,B16,B17,B18,HVY,H11,H13,H14, H15,H16,H17,H18,H20,H21,H24,H25,H26, H27,H28,MMM	3
6	PAOZZ	5310004079566	96906	MS35338-45	WASHER,LOCK PART OF KIT P/N 57K3213. UOC:AVY,A11,A13,A14,A15,A20,A24,A25, A26,A27,B16,B17,B18,HVY,H11,H13,H14, H15,H16,H17,H18,H20,H21,H24,H25,H26, H27,H28,MMM	6
7	PAOZZ	5340014086460	19207	12343063	BRACKET,ANGLE PART OF KIT P/N 57K3213..... UOC:AVY,A11,A13,A14,A15,A20,A24,A25, A26,A27,B16,B17,B18,HVY,H11,H13,H14, H15,H16,H17,H18,H20,H21,H24,H25,H26, H27,H28,MMM	1
8	PAOZZ	5306002264829	80204	B1821BH031C125N	BOLT,MACHINE PART OF KIT P/N 57K3213 UOC:AVY,A11,A13,A14,A15,A20,A24,A25, A26,A27,B16,B17,B18,HVY,H11,H13,H14, H15,H16,H17,H18,H20,H21,H24,H25,H26, H27,H28,MMM	2
9	PAOZZ	5310000806004	96906	MS27183-14	WASHER,FLAT PART OF KIT P/N 57K3213. UOC:AVY,A11,A13,A14,A15,A20,A24,A25, A26,A27,B16,B17,B18,HVY,H11,H13,H14,	2

(1) ITEM NO	(2) SMR CODE	(3) NSN	(4) CAGEC	(5) PART NUMBER	(6) DESCRIPTION AND USABLE ON CODES(UOC)	(7) QTY
					H15,H16,H17,H18,H20,H21,H24,H25,H26, H27,H28,MMM	
KIT	PDOZZ	2540014247363	19207	57K3213	PARTS KIT,MIRROR AS.....	1
					UOC:AVY,A11,A13,A14,A15,A20,A24,A25, A26,A27,B16,B17,B18,HVY,H11,H13,H14, H15,H16,H17,H18,H20,H21,H24,H25,H26, H27,H28,MMM	
					BOLT,MACHINE (2) 461-8	
					BRACKET,ANGLE (1) 461-2	
					BRACKET,ANGLE (1) 461-7	
					MIRROR HEAD,VEHICUL(1) 461-3	
					NUT,PLAIN,BLIND RIV(2) 461-1	
					NUT,SELF-LOCKING,HE(3) 461-5	
					WASHER,FLAT (2) 461-4	
					WASHER,FLAT (2) 461-9	
					WASHER,LOCK (6) 461-6	

END OF FIGURE

USE WITH A2 VEHICLES

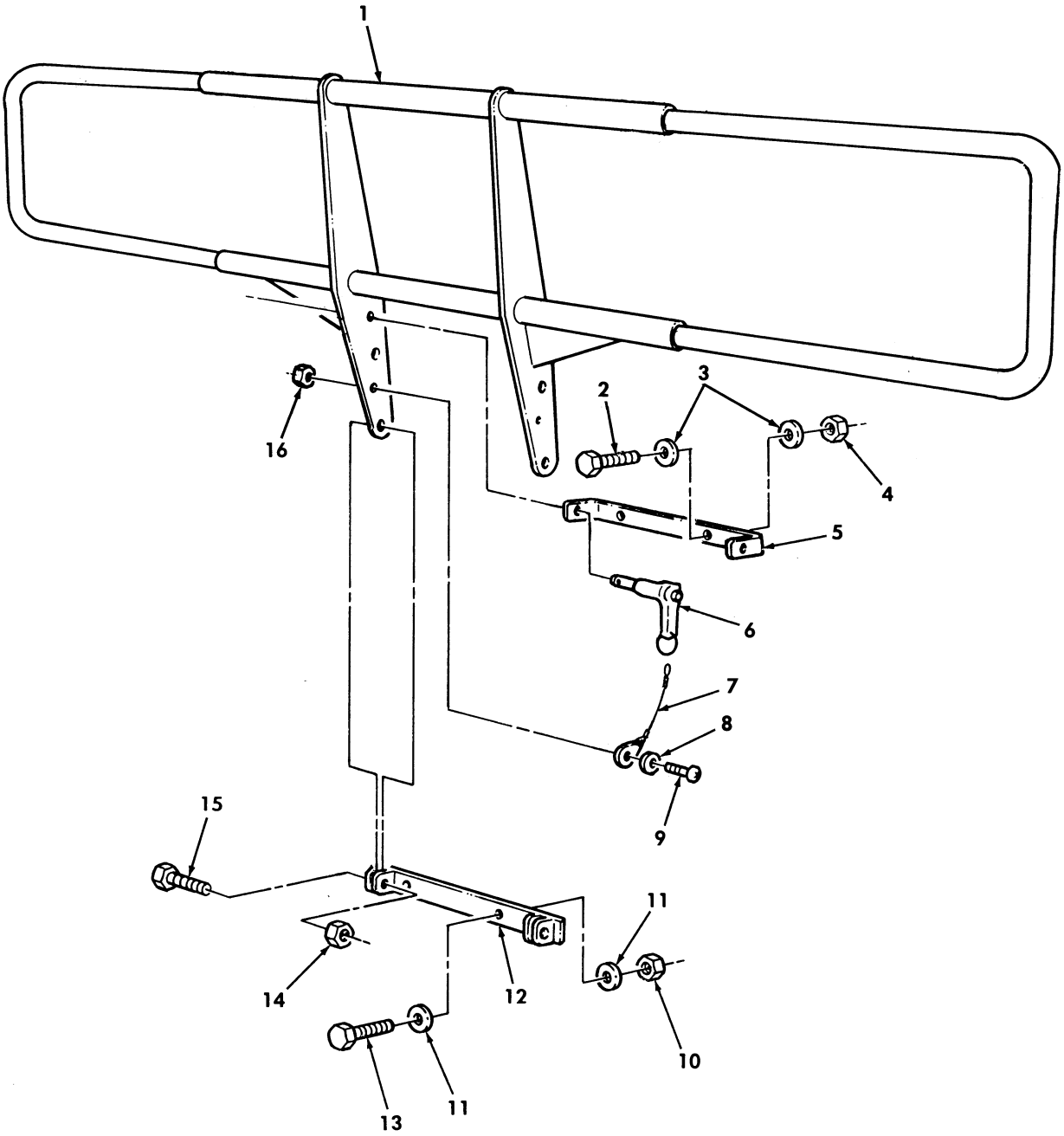

Figure 462. Brushguard Kit.

(1) ITEM NO	(2) SMR CODE	(3) NSN	(4) CAGEC	(5) PART NUMBER	(6) DESCRIPTION AND USABLE ON CODES(UOC)	(7) QTY
					GROUP 3307 SPECIAL PURPOSE KITS	
					FIG. 462 BRUSHGUARD KIT	
1	PAOZZ	2540014666114	34623	12460550	GUARD,BRUSH,VEHICUL PART OF KIT P/N 57K3490..... UOC:BVY,B15,B20,B24,B25,C17,NNN	1
2	PAOZZ	5305000680511	80204	B1821BH038C125N	SCREW,CAP,HEXAGON H 7/16-14 X 2.00 PART OF KIT P/N 57K3490..... UOC:BVY,B15,B20,B24,B25,C17,NNN	2
3	PAOZZ	5310014124013	24617	2436163	WASHER,FLAT 3/8 PART OF KIT P/N 57K3490..... UOC:BVY,B15,B20,B24,B25,C17,NNN	4
4	PAOZZ	5310004582382	24617	9418969	NUT,SELF-LOCKING,HE 3/8-16 PART OF KIT P/N 57K3490..... UOC:BVY,B15,B20,B24,B25,C17,NNN	2
5	PAOZA	5340014661978	19207	12460280	BRACKET,MOUNTING PART OF KIT P/N 57K3490..... UOC:BVY,B15,B20,B24,B25,C17,NNN	1
6	PAOZZ	5315014731590	80205	MS17986C1009	PIN,QUICK RELEASE PART OF KIT P/N 57K3490..... UOC:BVY,B15,B20,B24,B25,C17,NNN	2
7	PAOZZ	4010014660849	19207	12342287	WIRE ROPE ASSEMBLY, PART OF KIT P/N 57K3490..... UOC:BVY,B15,B20,B24,B25,C17,NNN	2
8	PAOZZ	5310013611163	24617	9417373	WASHER,FLAT #10 PART OF KIT P/N 57K3490..... UOC:BVY,B15,B20,B24,B25,C17,NNN	2
9	PAOZZ	5305011858647	7X677	160057	SCREW,MACHINE #10-32 X 3/4 PART OF KIT P/N 57K3490..... UOC:BVY,B15,B20,B24,B25,C17,NNN	2
10	PAOZZ	5310014664852	24617	9419477	NUT,SELF-LOCKING,HE 7/16-14 W/O WINCH PART OF KIT P/N 57K3490..... UOC:BVY,B15,B20,B24,B25,C17,NNN	2
11	PAOZZ	5310008094085	24617	9420022	WASHER,FLAT 7/16 PART OF KIT P/N 57K3490..... UOC:BVY,B15,B20,B24,B25,C17,NNN	4
12	PAOZZ	2590014665095	19207	12460279	BRACKET,VEHICULAR C PART OF KIT P/N 57K3490..... UOC:BVY,B15,B20,B24,B25,C17,NNN	1
13	PAOZZ	5305000712057	80204	B1821BH044C200N	SCREW,CAP,HEXAGON H PART OF KIT P/N 57K3490..... UOC:BVY,B15,B20,B24,B25,C17,NNN	2
14	PAOZZ	5310014090897	24617	9419482	NUT,SELF-LOCKING,HE PART OF KIT P/N 57K3490..... UOC:BVY,B15,B20,B24,B25,C17,NNN	2
15	PAOZZ	5305007247222	80204	B1821BH063C200N	SCREW,CAP,HEXAGON H 5/8-11 X 2.00 PART OF KIT P/N 57K3490..... UOC:BVY,B15,B20,B24,B25,C17,NNN	2
16	PAOZZ	5310001249265	72582	271169	NUT,PLAIN,ASSEMBLED #10-32 PART OF KIT P/N 57K3490..... UOC:BVY,B15,B20,B24,B25,C17,NNN	2
KIT	PDOZZ	2510014617075	19207	57K3490	KIT,BRUSHGUARD.....	1

(1) ITEM NO	(2) SMR CODE	(3) NSN	(4) CAGEC	(5) PART NUMBER	(6) DESCRIPTION AND USABLE ON CODES(UOC)	(7) QTY
					UOC:BVY,B15,B20,B24,B25,C17,NNN	
					BRACKET,VEHICULAR C(	1) 462-12
					BRACKET,MOUNTING (	1) 462-5
					GUARD,BRUSH,VEHICUL(	1) 462-1
					NUT,PLAIN,ASSEMBLED(	2) 462-16
					NUT,SELF-LOCKING,HE(	2) 462-4
					NUT,SELF-LOCKING,HE(	2) 462-10
					NUT,SELF-LOCKING,HE(	2) 462-14
					PIN,QUICK RELEASE (	2) 462-6
					SCREW,CAP,HEXAGON H(	2) 462-2
					SCREW,CAP,HEXAGON H(	2) 462-13
					SCREW,CAP,HEXAGON H(	2) 462-15
					SCREW,MACHINE (	2) 462-9
					WASHER,FLAT (	4) 462-3
					WASHER,FLAT (	4) 462-11
					WASHER,FLAT (	2) 462-8
					WIRE ROPE ASSEMBLY,(	2) 462-7

END OF FIGURE

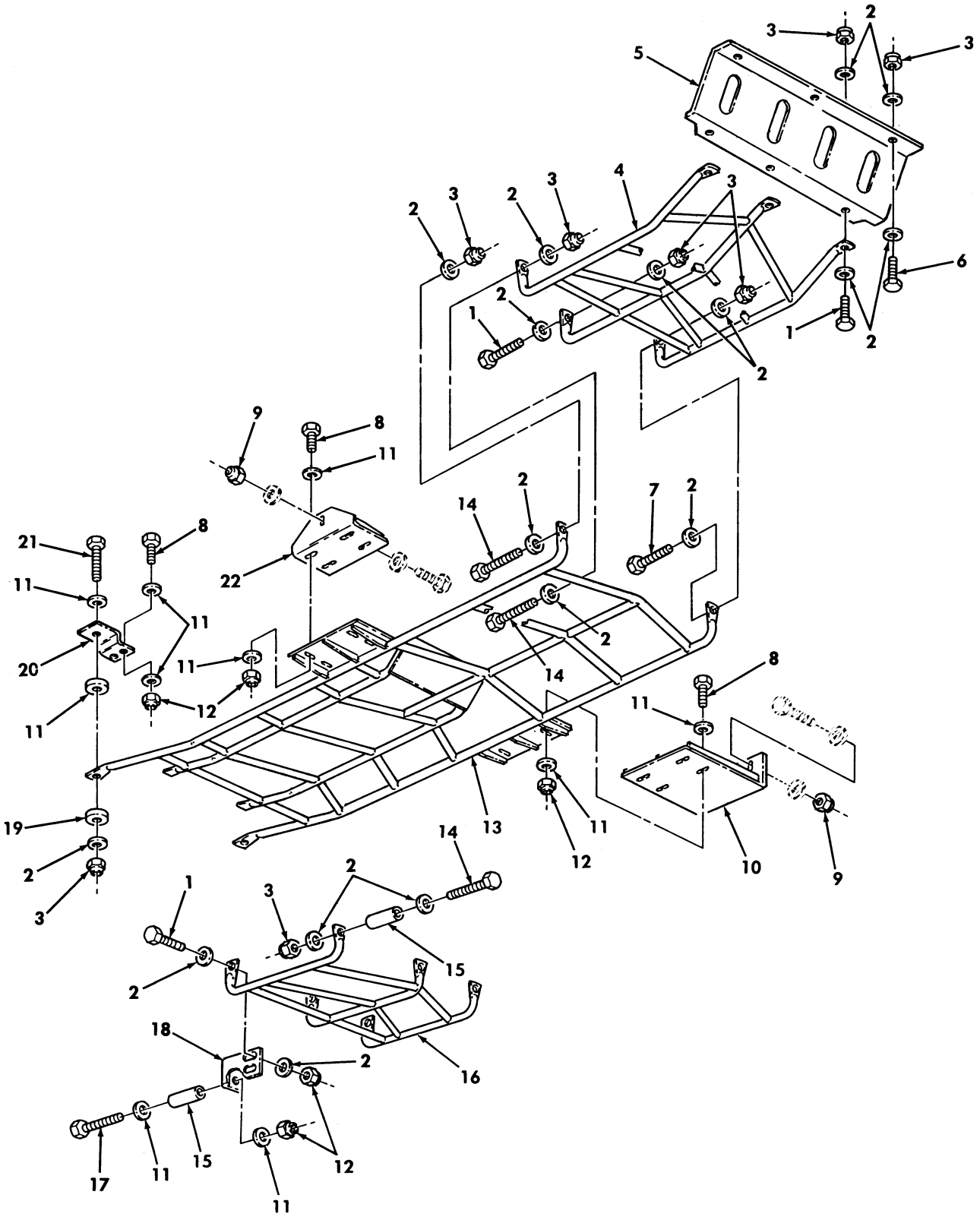

Figure 463. Underbody Protection Kit With and Wtihout Winch.

(1) ITEM NO	(2) SMR CODE	(3) NSN	(4) CAGEC	(5) PART NUMBER	(6) DESCRIPTION AND USABLE ON CODES(UOC)	(7) QTY
					GROUP 3307 SPECIAL PURPOSE KITS	
					FIG. 463 UNDERBODY PROTECTION KIT WITH AND WITHOUT WINCH	
1	PAOZZ	5305005432419	80204	B1821BH038C113N	SCREW,CAP,HEXAGON H PART OF KIT P/N 57K3492 PART OF KIT P/N 57K3495..... UOC:BVY,B15,B20,B24,B25,C17,NNN	7
2	PAOZZ	5310014124013	24617	2436163	WASHER,FLAT W/WINCH PART OF KIT P/N 57K3492..... UOC:BVY,B24,B25,C17,NNN	34
2	PAOZZ	5310014124013	24617	2436163	WASHER,FLAT W/O WINCH PART OF KIT P/N 57K3495..... UOC:BVY,B15,B20,B24,B25,C17,NNN	36
3	PAOZZ	5310009359021	96906	MS51943-35	NUT,SELF-LOCKING,HE W/WINCH PART OF KIT PART OF KIT P/N 57K3492..... UOC:BVY,B24,B25,C17,NNN	17
3	PAOZZ	5310009359021	96906	MS51943-35	NUT,SELF-LOCKING,HE W/O WINCH PART OF KIT P/N 57K3495..... UOC:BVY,B15,B20,B24,B25,C17,NNN	18
4	PAOZZ	2540014663849	19207	12460415	GUARD,BRUSH,VEHICUL PART OF KIT P/N 57K3492 PART OF KIT P/N 57K3495..... UOC:BVY,B15,B20,B24,B25,C17,NNN	1
5	PAOZZ	2590014657756	19207	12447163-2	PLATE ASSEMBLY SKID W/WINCH PART OF KIT P/N 57K3492..... UOC:BVY,B24,B25,C17,NNN	1
5	PAOZZ	5340014779397	19207	12460414	BRACKET,MULTIPLE AN W/O WINCH PART OF KIT P/N 57K3495..... UOC:BVY,B15,B20,B24,B25,C17,NNN	1
6	PAOZZ	5305000680510	80204	B1821BH038C100N	SCREW,CAP,HEXAGON H PART OF KIT P/N 57K3495..... UOC:BVY,B15,B20,B24,B25,C17,NNN	3
6	PAOZZ	5305000680510	80204	B1821BH038C100N	SCREW,CAP,HEXAGON H PART OF KIT P/N 57K3492..... UOC:BVY,B15,B20,B24,B25,C17,NNN	2
7	PAOZZ	5305011983440	7X677	9430724	SCREW,CAP,HEXAGON H PART OF KIT P/N 57K3492 PART OF KIT P/N 57K3495..... UOC:BVY,B15,B20,B24,B25,C17,NNN	1
8	PAOZZ	5306011300457	24617	9430677	BOLT,MACHINE PART OF KIT P/N 57K3492 PART OF KIT P/N 57K3495..... UOC:BVY,B15,B20,B24,B25,C17,NNN	12
9	PAOZZ	5310004883889	96906	MS51943-39	NUT,SELF-LOCKING,HE PART OF KIT P/N 57K3492 PART OF KIT P/N 57K3495..... UOC:BVY,B15,B20,B24,B25,C17,NNN	4
10	PAOZZ	5340014661982	19207	12447146	BRACKET,MOUNTING L.H.PART OF KIT P/N 57K3492 PART OF KIT P/N 57K3495..... UOC:BVY,B15,B20,B24,B25,C17,NNN	1
11	PAOZZ	5310011191024	24617	2436162	WASHER,FLAT PART OF KIT P/N 57K3492 PART OF KIT P/N 57K3495..... UOC:BVY,B15,B20,B24,B25,C17,NNN	36
12	PAOZZ	5310008140673	96906	MS51943-33	NUT,SELF-LOCKING,HE PART OF KIT P/N 57K3492 PART OF KIT P/N 57K3495..... UOC:BVY,B15,B20,B24,B25,C17,NNN	18

(1) ITEM NO	(2) SMR CODE	(3) NSN	(4) CAGEC	(5) PART NUMBER	(6) DESCRIPTION AND USABLE ON CODES(UOC)	(7) QTY
13	PAOZZ	2540014659030	19207	12447143	SHIELD ASSEMBLY,DRI PART OF KIT P/N 57K3492 PART OF KIT P/N 57K3495..... UOC:BVY,B15,B20,B24,B25,C17,NNN	1
14	PAOZZ	5305011979417	7X677	9428795	SCREW,CAP,HEXAGON H PART OF KIT P/N 57K3492 PART OF KIT P/N 57K3495..... UOC:BVY,B15,B20,B24,B25,C17,NNN	5
15	PAOZZ	5365014660850	19207	12338186-69	SPACER,SLEEVE PART OF KIT P/N 57K3492 PART OF KIT P/N 57K3495..... UOC:BVY,B15,B20,B24,B25,C17,NNN	9
16	PAOZZ	2540014663770	19207	12447144	GUARD,BRUSH,VEHICUL PART OF KIT P/N 57K3492 PART OF KIT P/N 57K3495..... UOC:BVY,B15,B20,B24,B25,C17,NNN	1
17	PAOZZ	5305014599564	24617	453039	SCREW,CAP,HEXAGON H PART OF KIT P/N 57K3492 PART OF KIT P/N 57K3495..... UOC:BVY,B15,B20,B24,B25,C17,NNN	6
18	PAOZZ	5340014662425	19207	12447145	BRACKET,ANGLE PART OF KIT P/N 57K3492 PART OF KIT P/N 57K3495..... UOC:BVY,B15,B20,B24,B25,C17,NNN	3
19	PAOZZ	5310014659727	19207	12447149	WASHER,FLAT PART OF KIT P/N 57K3492 PART OF KIT P/N 57K3495..... UOC:BVY,B15,B20,B24,B25,C17,NNN	4
20	PAOZZ	5340014664086	19207	12447148	BRACKET,MULTIPLE AN PART OF KIT P/N 57K3492 PART OF KIT P/N 57K3495..... UOC:BVY,B15,B20,B24,B25,C17,NNN	2
21	PAOZZ	5305009640691	80204	B1821BH038C150N	SCREW,CAP,HEXAGON H PART OF KIT P/N 57K3492 PART OF KIT P/N 57K3495..... UOC:BVY,B15,B20,B24,B25,C17,NNN	2
22	PAOZZ	5340014748830	34623	5593495	BRACKET,MOUNTING R.H. PART OF KIT P/N 57K3492 PART OF KIT P/N 57K3495. UOC:BVY,B15,B20,B24,B25,C17,NNN	1

END OF FIGURE

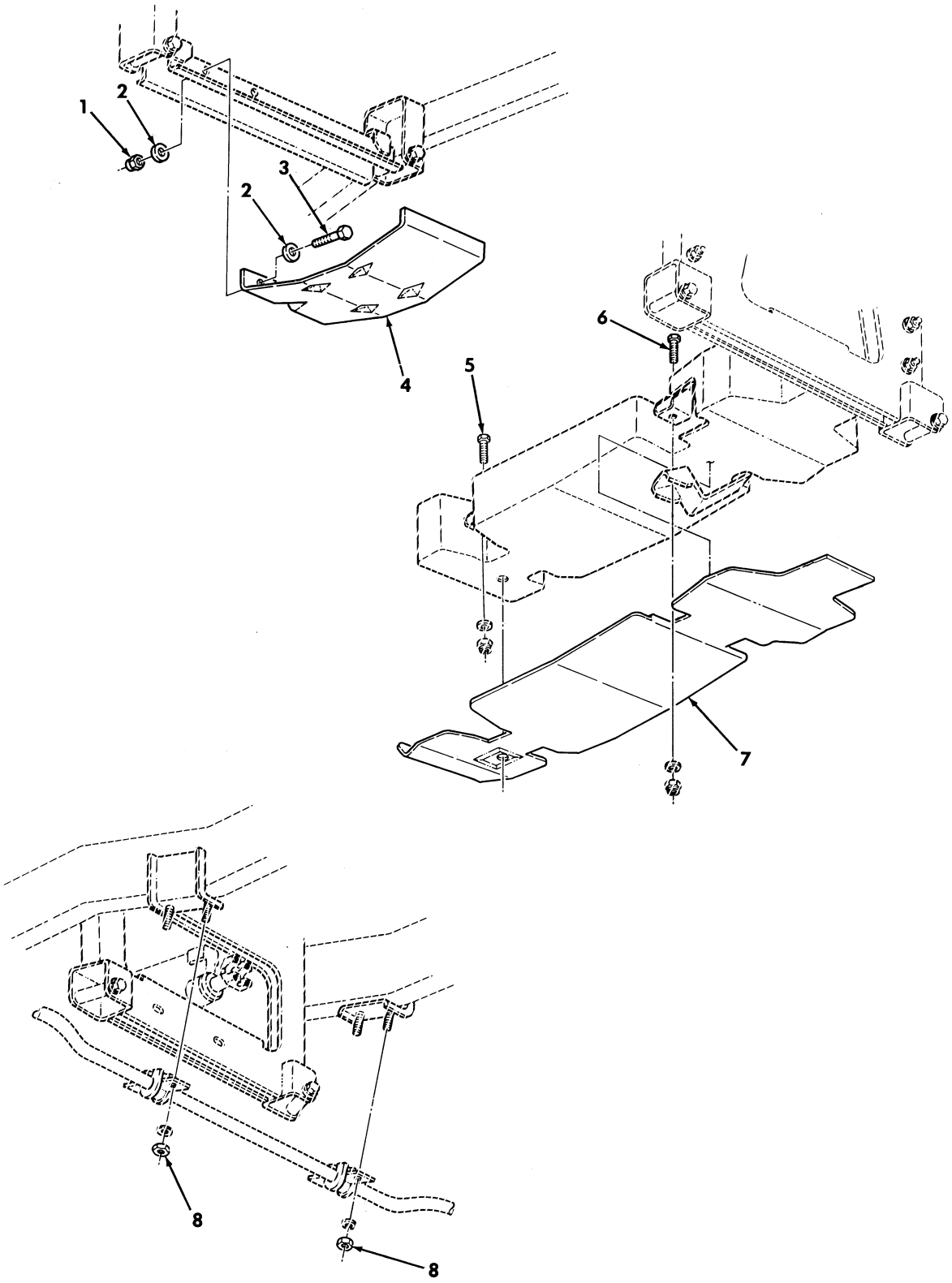

Figure 464. Underbody Protection Kit, Transfer Case, Fuel Tank Shields, and Sway Bar Link Nuts.

(1) ITEM NO	(2) SMR CODE	(3) NSN	(4) CAGEC	(5) PART NUMBER	(6) DESCRIPTION AND USABLE ON CODES(UOC)	(7) QTY
					GROUP 3307 SPECIAL PURPOSE KITS	
					FIG. 464 UNDERBODY PROTECTION KIT, TRANSFER CASE,FUEL TANK SHIELDS,AND SWAY BAR LINK NUTS	
1	PAOZZ	5310009359021	96906	MS51943-35	NUT,SELF-LOCKING,HE PART OF KIT P/N 57K3492,PART OF KIT P/N 57K3495..... UOC:BVY,B15,B20,B24,B25,C17,NNN	2
2	PAOZZ	5310014124013	24617	2436163	WASHER,FLAT PART OF KIT P/N 57K3492, PART OF KIT P/N 57K3495..... UOC:BVY,B15,B20,B24,B25,C17,NNN	4
3	PAOZZ	5305000680510	80204	B1821BH038C100N	SCREW,CAP,HEXAGON H PART OF KIT P/N 57K3492,PART OF KIT P/N 57K3495..... UOC:BVY,B15,B20,B24,B25,C17,NNN	2
4	PAOZZ	2590014663824	19207	12447151	SHIELD,TRANSFER CAS PART OF KIT P/N 57K3492,PART OF KIT P/N 57K3495..... UOC:BVY,B15,B20,B24,B25,C17,NNN	1
5	PAOZZ	5305014125995	19207	12460145-2	SCREW,CAP,HEXAGON H PART OF KIT P/N 57K3492,PART OF KIT P/N 57K3495..... UOC:BVY,B15,B20,B24,B25,C17,NNN	1
6	PAOZZ	5306014112338	19207	12460145-1	BOLT,MACHINE PART OF KIT P/N 57K3492 PART OF KIT P/N 57K3495..... UOC:BVY,B15,B20,B24,B25,C17,NNN	1
7	PAOZZ	2590014663866	19207	12447150	SHIELD,FUEL TANK PART OF KIT P/N 57K3492,PART OF KIT P/N 57K3495..... UOC:BVY,B15,B20,B24,B25,C17,NNN	1
8	PAOZZ	5310011504003	24617	9422299	NUT,SELF-LOCKING,HE PART OF KIT P/N 57K3492,PART OF KIT P/N 57K3495..... UOC:BVY,B15,B20,B24,B25,C17,NNN	4
KIT	PDOZZ	2540014678313	19207	57K3492	KIT WITH WINCH..... UOC:BVY,B15,B20,B24,B25,C17,NNN	1
					BOLT,MACHINE (12) 463-8	
					BOLT,MACHINE (1) 464-6	
					BRACKET,ANGLE (3) 463-18	
					BRACKET,MOUNTING (1) 463-10	
					BRACKET,MOUNTING (1) 463-22	
					BRACKET,MULTIPLE AN(2) 463-20	
					GUARD,BRUSH,VEHICUL(1) 463-4	
					GUARD,BRUSH,VEHICUL(1) 463-16	
					NUT,SELF-LOCKING,HE(17) 463-3	
					NUT,SELF-LOCKING,HE(4) 463-9	
					NUT,SELF-LOCKING,HE(18) 463-12	
					NUT,SELF-LOCKING,HE(2) 464-1	
					NUT,SELF-LOCKING,HE(4) 464-8	
					PLATE ASSEMBLY SKID(1) 463-5	
					SCREW,CAP,HEXAGON H(7) 463-1	
					SCREW,CAP,HEXAGON H(2) 463-6	
					SCREW,CAP,HEXAGON H(1) 463-7	
					SCREW,CAP,HEXAGON H(5) 463-14	
					SCREW,CAP,HEXAGON H(6) 463-17	
					SCREW,CAP,HEXAGON H(2) 463-21	
					SCREW,CAP,HEXAGON H(2) 464-3	

(1) ITEM NO	(2) SMR CODE	(3) NSN	(4) CAGEC	(5) PART NUMBER	(6) DESCRIPTION AND USABLE ON CODES(UOC)	(7) QTY
					SCREW,CAP,HEXAGON H(1) 464-5	
					SHIELD ASSEMBLY,DRI(1) 463-13	
					SHIELD,FUEL TANK (1) 464-7	
					SHIELD,TRANSFER CAS(1) 464-4	
					SPACER,SLEEVE (9) 463-15	
					WASHER,FLAT (34) 463-2	
					WASHER,FLAT (36) 463-11	
					WASHER,FLAT (4) 463-19	
					WASHER,FLAT (4) 464-2	
	PDOZZ	2540014678341	19207	57K3495	KIT WITH OUT WINCH.....	1
					UOC:BVY,B15,B20,B24,B25,C17 ,NNN	
					BOLT,MACHINE (12) 463-8	
					BOLT,MACHINE (1) 464-6	
					BRACKET,ANGLE (1) 463-18	
					BRACKET,MOUNTING (1) 463-10	
					BRACKET,MOUNTING (1) 463-22	
					BRACKET,MULTIPLE AN(1) 463-5	
					BRACKET,MULTIPLE AN(2) 463-20	
					GUARD,BRUSH,VEHICUL(1) 463-4	
					GUARD,BRUSH,VEHICUL(1) 463-16	
					NUT,SELF-LOCKING,HE(18) 463-3	
					NUT,SELF-LOCKING,HE(4) 463-9	
					NUT,SELF-LOCKING,HE(18) 463-12	
					NUT,SELF-LOCKING,HE(2) 464-1	
					NUT,SELF-LOCKING,HE(4) 464-8	
					SCREW,CAP,HEXAGON H(7) 463-1	
					SCREW,CAP,HEXAGON H(3) 463-6	
					SCREW,CAP,HEXAGON H(1) 463-7	
					SCREW,CAP,HEXAGON H(5) 463-14	
					SCREW,CAP,HEXAGON H(6) 463-17	
					SCREW,CAP,HEXAGON H(2) 463-21	
					SCREW,CAP,HEXAGON H(2) 464-3	
					SCREW,CAP,HEXAGON H(1) 464-5	
					SHIELD ASSEMBLY,DRI(1) 463-13	
					SHIELD,FUEL TANK (1) 464-7	
					SHIELD,TRANSFER CAS(1) 464-4	
					SPACER,SLEEVE (9) 463-15	
					WASHER,FLAT (36) 463-2	
					WASHER,FLAT (36) 463-11	
					WASHER,FLAT (4) 463-19	
					WASHER,FLAT (4) 464-2	

END OF FIGURE

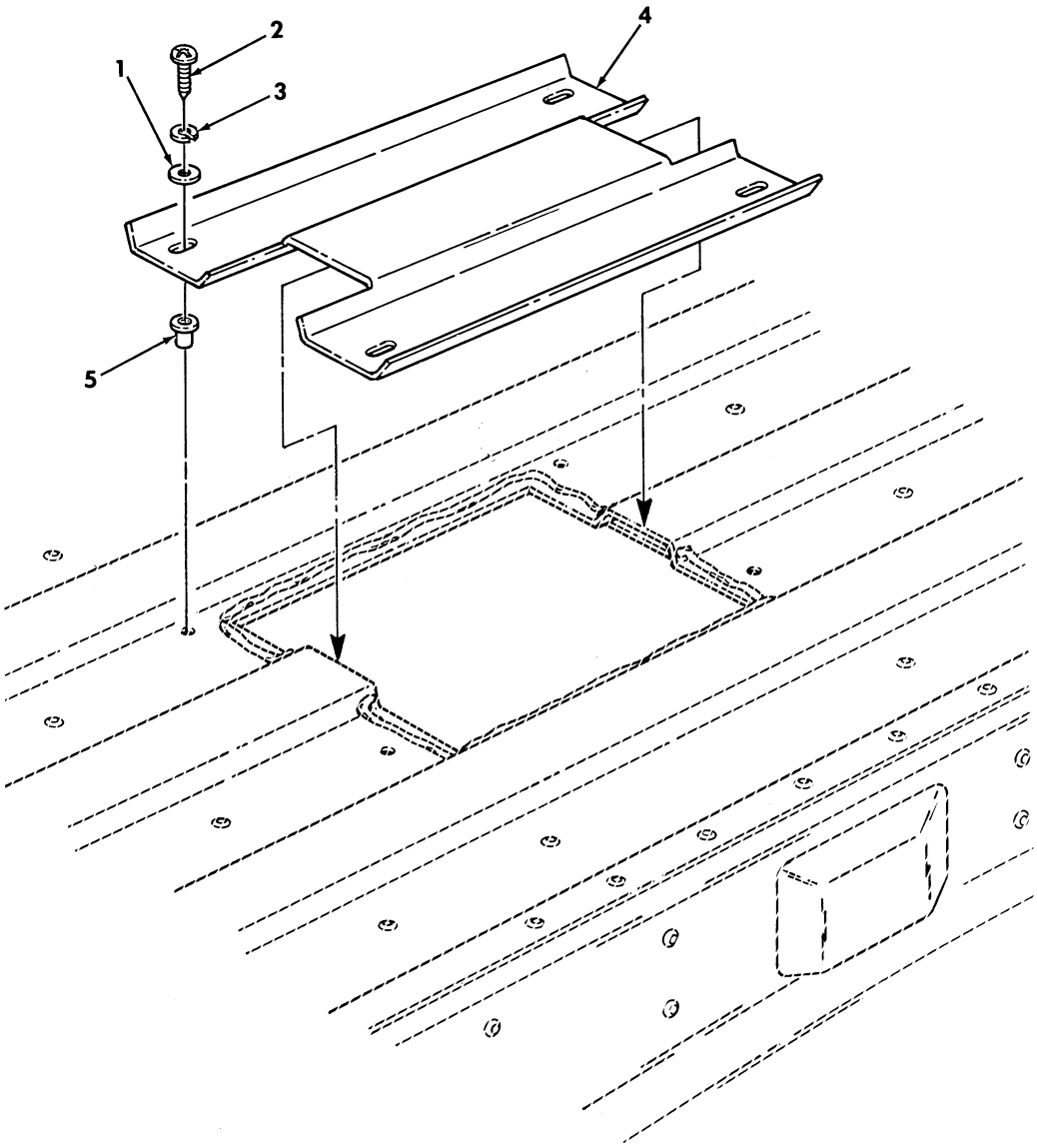

Figure 465. Cover, Access Cargo Floor Modification Kit.

(1) ITEM NO	(2) SMR CODE	(3) NSN	(4) CAGEC	(5) PART NUMBER	(6) DESCRIPTION AND USABLE ON CODES(UOC)	(7) QTY
					GROUP 3307 SPECIAL PURPOSE KITS	
					FIG. 465 COVER,ACCESS CARGO FLOOR MODIFICATION KIT	
1	PAOZZ	5310013611163	24617	9417373	WASHER,FLAT PART OF KIT P/N 57K3529. UOC:BVY,B15,B20,B24,B25,C17,NNN	4
2	PAOZZ	5305010831591	96906	MS51957-64B	SCREW,MACHINE PART OF KIT P/N 57K3529..... UOC:BVY,B15,B20,B24,B25,C17,NNN	4
3	PAOZZ	5310009222017	30379	120217	WASHER,LOCK PART OF KIT P/N 57K3529. UOC:BVY,B15,B20,B24,B25,C17,NNN	4
4	PAOZZ	5340014570804	19207	12460506	COVER,ACCESS PART OF KIT P/N 57K3529 UOC:BVY,B15,B20,B24,B25,C17,NNN	1
* 5	PAOZZ	5325014608350	19207	12446871-10	INSERT,SCREW THREAD PART OF KIT P/N 57K3529..... UOC:BVY,B15,B20,B24,B25,C17,NNN	4
KIT	PDOZZ	2510014547077	19207	57K3529	PARTS KIT,FLOOR VEH..... UOC:BVY,B15,B20,B24,B25,C17,NNN	1
					COVER,ACCESS (1) 465-4	
					INSERT,SCREW,THREAD(4) 465-5	
					SCREW,MACHINE (4) 465-2	
					WASHER,FLAT (4) 465-1	
					WASHER,LOCK (4) 465-3	

END OF FIGURE

DELETED

Figure 466. FR12 Refrigerant Parts Kit.

(1) ITEM NO	(2) SMR CODE	(3) NSN	(4) CAGEC	(5) PART NUMBER	(6) DESCRIPTION AND USABLE ON CODES(UOC)	(7) QTY
					GROUP 3307 SPECIAL PURPOSE KITS	
					FIG. 466 FR12 REFRIGERANT PARTS KIT	

DELETED

DELETED

Figure 467. R-12 to FR12 Refrigerant Conversion Retrofit Kit.

(1) ITEM NO	(2) SMR CODE	(3) NSN	(4) CAGEC	(5) PART NUMBER	(6) DESCRIPTION AND USABLE ON CODES(UOC)	(7) QTY
					GROUP 3307 SPECIAL PURPOSE KITS	
					FIG. 467 R-12 TO FR12 REFRIGERANT CONVERSION RETROFIT KIT	

DELETED

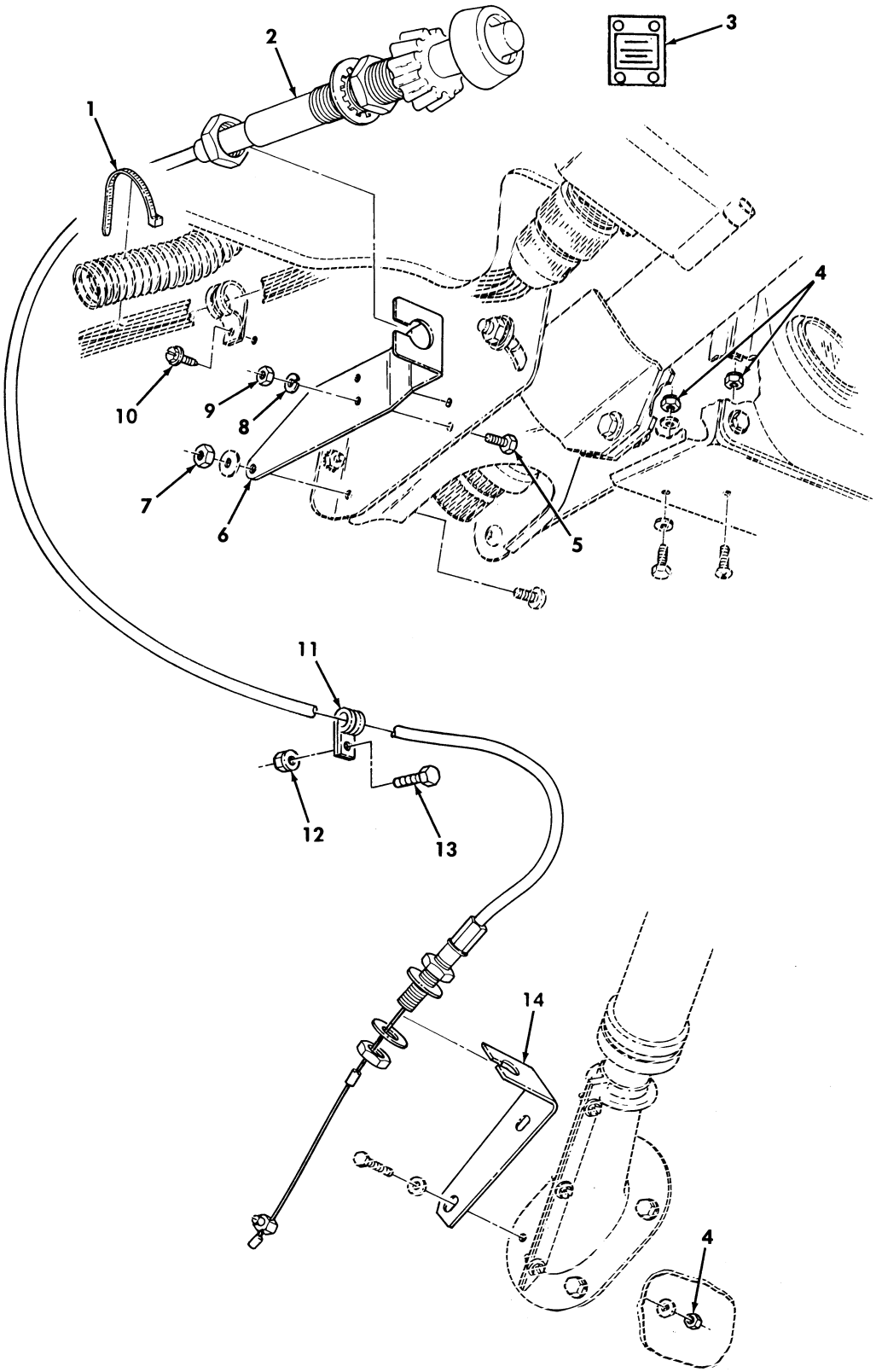

Figure 468. Hand Throttle Control Kit.

(1) ITEM NO	(2) SMR CODE	(3) NSN	(4) CAGEC	(5) PART NUMBER	(6) DESCRIPTION AND USABLE ON CODES(UOC)	(7) QTY
					GROUP 3307 SPECIAL PURPOSE KITS	
					FIG. 468 HAND THROTTLE CONTROL KIT	
1	PAOZZ	5975010345871	96906	MS3367-7-0	STRAP,TIEDOWN,ELECT PART OF KIT P/N 57K3531.....	1
2	PAOZZ	2590014664397	60602	36162-23	CONTROL ASSEMBLY,PU PART OF KIT P/N 57K3531.....	1
3	PAOZZ	7690014665217	19207	12460548	MARKER,IDENTIFICATI PART OF KIT P/N 57K3531.....	1
4	PAOZZ	5310000614650	96906	MS51943-31	NUT,SELF-LOCKING,HE PART OF KIT P/N 57K3531.....	4
5	PAOZZ	5305000680508	80204	B1821BH025C075N	SCREW,CAP,HEXAGON H PART OF KIT P/N 57K3531.....	2
6	PAOZZ	2590014665250	34623	12460547	BRACKET,VEHICULAR C PART OF KIT P/N 57K3531.....	1
7	PAOZZ	5310008140673	96906	MS51943-33	NUT,SELF-LOCKING,HE PART OF KIT P/N 57K3531.....	1
8	PAOZZ	5310006379541	96906	MS35338-46	WASHER,LOCK PART OF KIT P/N 57K3531.	2
9	PAOZZ	5310005845005	12204	120375	NUT,PLAIN,HEXAGON PART OF KIT P/N 57K3531.....	2
10	PAOZZ	5305012596322	34623	12342499-1	SCREW,MACHINE PART OF KIT P/N 57K3531.....	1
11	PAOZZ	5340007647051	96906	MS21333-69	CLAMP,LOOP PART OF KIT P/N 57K3531..	1
12	PAOZZ	5310001249265	72582	271169	NUT,PLAIN,ASSEMBLED PART OF KIT P/N 57K3531.....	1
13	PAOZZ	5305005829501	82386	410-63	SCREW,CAP,HEXAGON H PART OF KIT P/N 57K3531.....	1
14	PAOZZ	2590013079303	57958	C5136359	BRACKET,VEHICULAR C PART OF KIT P/N 57K3531.....	1
KIT	PAOZZ	2910014666264	34623	57K3531	PARTS KIT,THROTTLE.....	1
					BRACKET,VEHICULAR C(1) 468-6	
					BRACKET,VEHICULAR C(1) 468-14	
					CLAMP,LOOP (1) 468-11	
					CONTROL ASSEMBLY,PU(1) 468-2	
					MARKER,IDENTIFICATI(1) 468-3	
					NUT,PLAIN,HEXAGON (2) 468-9	
					NUT,PLAIN,ASSEMBLED(1) 468-12	
					NUT,SELF-LOCKING,HE(4) 468-4	
					NUT,SELF-LOCKING,HE(1) 468-7	
					SCREW,CAP,HEXAGON H(2) 468-5	
					SCREW,CAP,HEXAGON H(1) 468-13	
					SCREW,MACHINE (1) 468-10	
					STRAP,TIEDOWN,ELECT(1) 468-1	
					WASHER,LOCK (2) 468-8	

END OF FIGURE

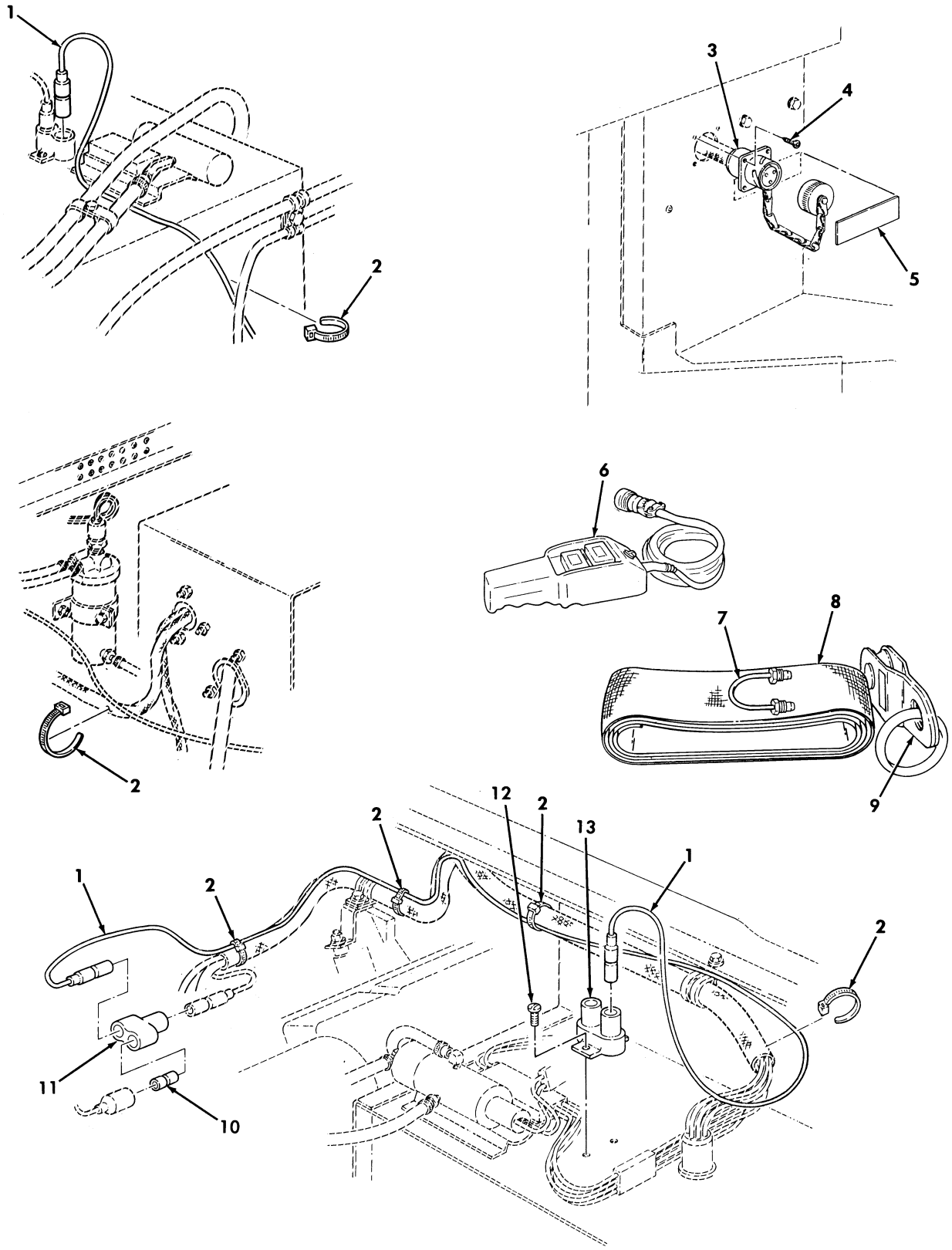

Figure 469. 10,500 Lb Hydraulic Winch Accessory Kit.

(1) ITEM NO	(2) SMR CODE	(3) NSN	(4) CAGEC	(5) PART NUMBER	(6) DESCRIPTION AND USABLE ON CODES(UOC)	(7) QTY
					GROUP 3307 SPECIAL PURPOSE KITS	
					FIG. 469 10,500 LB HYDRAULIC WINCH ACCESSORY KIT	
1	PAOZZ	6150014731169	19207	12469065-1	LEAD,ELECTRICAL PART OF KIT P/N 57K3541..... UOC:AVY,A13,A14,A24,A25,A26,A27,BVY, B16,B17,B18,B24,B25,C17,HVY,H13,H14, H16,H17,H18,H21,H24,H25,H26,H27,H28, NNN	1
2	PAOZZ	5975009846582	96906	MS3367-1-0	STRAP,TIEDOWN,ELECT PART OF KIT P/N 57K3541..... UOC:AVY,A13,A14,A24,A25,A26,A27,BVY, B16,B17,B18,B24,B25,C17,HVY,H13,H14, H16,H17,H18,H21,H24,H25,H26,H27,H28, NNN	6
3	PAOZZ	6150014731178	19207	12469064	CABLE ASSEMBLY,SPEC PART OF KIT P/N 57K3541..... UOC:AVY,A13,A14,A24,A25,A26,A27,BVY, B16,B17,B18,B24,B25,C17,HVY,H13,H14, H16,H17,H18,H21,H24,H25,H26,H27,H28, NNN	1
4	PAOZZ	5305014740988	24617	9417323	SCREW,TAPPING PART OF KIT P/N 57K3541..... UOC:AVY,A13,A14,A24,A25,A26,A27,BVY, B16,B17,B18,B24,B25,C17,HVY,H13,H14, H16,H17,H18,H21,H24,H25,H26,H27,H28, NNN	4
5	PAOZZ		19207	12469066	DECAL PART OF KIT P/N 57K3541..... UOC:AVY,A13,A14,A24,A25,A26,A27,BVY, B16,B17,B18,B24,B25,C17,HVY,H13,H14, H16,H17,H18,H21,H24,H25,H26,H27,H28, NNN	1
6	PAOZZ	6150014758835	0GZB7	983-74-1001	CONTROL,REEL PART OF KIT P/N 57K3541 UOC:AVY,A13,A14,A24,A25,A26,A27,BVY, B16,B17,B18,B24,B25,C17,HVY,H13,H14, H16,H17,H18,H21,H24,H25,H26,H27,H28, NNN	1
7	PAOZZ	4710014753753	0GZB7	983-90-50201	TUBE ASSEMBLY,METAL PART OF KIT P/N 57K3541..... UOC:AVY,A13,A14,A24,A25,A26,A27,BVY, B16,B17,B18,B24,B25,C17,HVY,H13,H14, H16,H17,H18,H21,H24,H25,H26,H27,H28	1
8	PAOZA	5340014753650	0GZB7	983-60-50089	STRAP,RETAINING PART OF KIT P/N 57K3541..... UOC:AVY,A13,A14,A24,A25,A26,A27,BVY, B16,B17,B18,B24,B25,C17,HVY,H13,H14, H16,H17,H18,H21,H24,H25,H26,H27,H28, NNN	1
9	PAOZZ	3940014754983	0GZB7	983-60-50085-A	BLOCK,TACKLE PART OF KIT P/N 57K3541 UOC:AVY,A13,A14,A24,A25,A26,A27,BVY, B16,B17,B18,B24,B25,C17,HVY,H13,H14,	1

(1) ITEM NO	(2) SMR CODE	(3) NSN	(4) CAGEC	(5) PART NUMBER	(6) DESCRIPTION AND USABLE ON CODES(UOC)	(7) QTY
					H16,H17,H18,H21,H24,H25,H26,H27,H28, NNN	
10	PAOZZ	5935008074109	19207	8741492	ADAPTER,CONNECTOR PART OF KIT P/N 57K3541..... UOC:AVY,A13,A14,A24,A25,A26,A27,BVY, B16,B17,B18,B24,B25,C17,HVY,H13,H14, H16,H17,H18,H21,H24,H25,H26,H27,H28, NNN	1
11	PAOZZ	5935009006281	96906	MS27147-1	ADAPTER,CONNECTOR PART OF KIT P/N 57K3541..... UOC:AVY,A13,A14,A24,A25,A26,A27,BVY, B16,B17,B18,B24,B25,C17,HVY,H13,H14, H16,H17,H18,H21,H24,H25,H26,H27,H28, NNN	1
12	PAOZZ	5305014783387	24617	449617	SCREW,TAPPING PART OF KIT P/N 57K3541..... UOC:AVY,A13,A14,A24,A25,A26,A27,BVY, B16,B17,B18,B24,B25,C17,HVY,H13,H14, H16,H17,H18,H21,H24,H25,H26,H27,H28, NNN	2
13	PAOZZ	5925014302318	58536	AA55571/01-001	CIRCUIT BREAKER PART OF KIT P/N 57K3541..... UOC:AVY,A13,A14,A24,A25,A26,A27,BVY, B16,B17,B18,B24,B25,C17,HVY,H13,H14, H16,H17,H18,H21,H24,H25,H26,H27,H28, NNN	1

END OF FIGURE

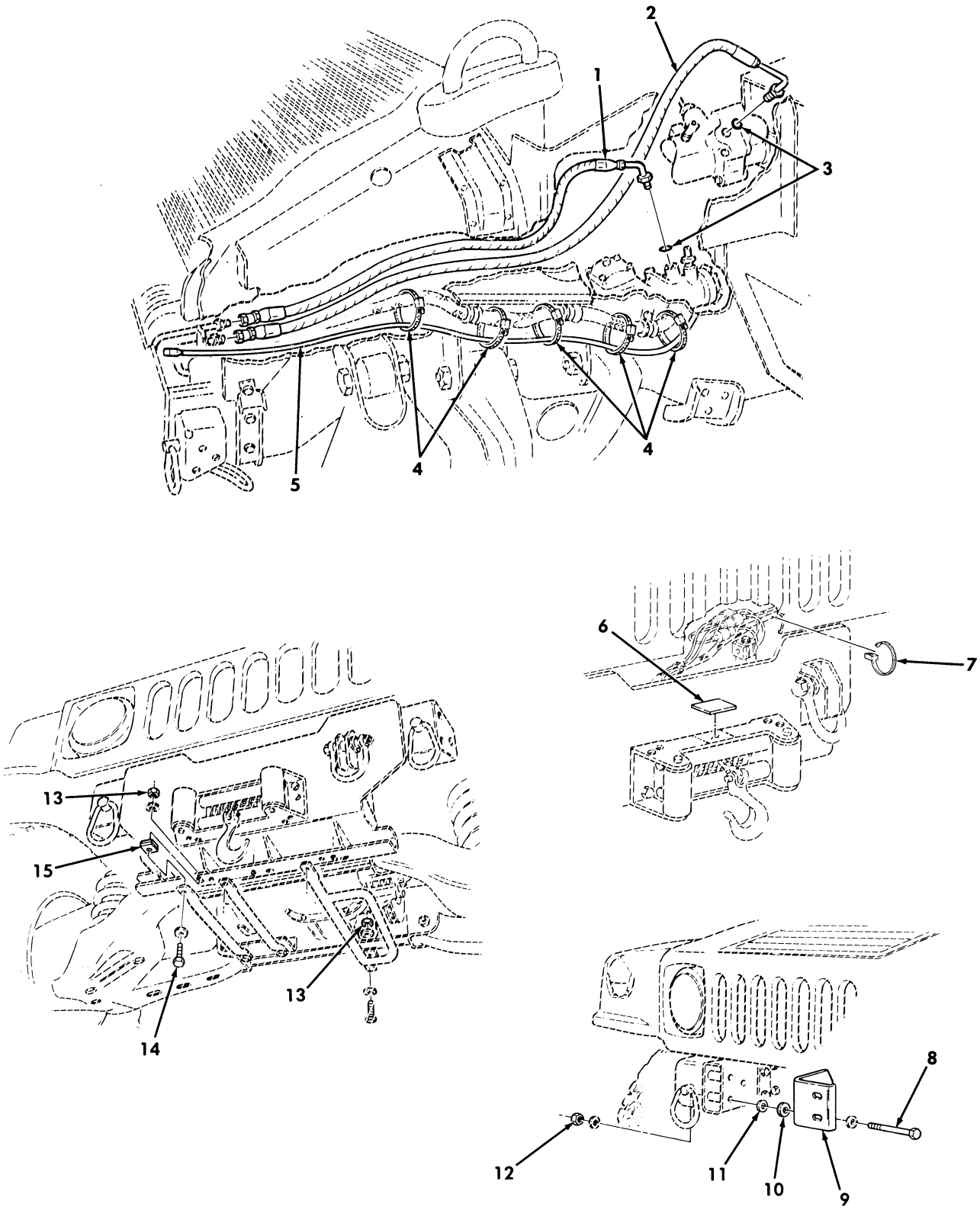

Figure 470. 10,500 Lb Hydraulic Winch Accessory Kit.

(1) ITEM NO	(2) SMR CODE	(3) NSN	(4) CAGEC	(5) PART NUMBER	(6) DESCRIPTION AND USABLE ON CODES(UOC)	(7) QTY
					GROUP 3307 SPECIAL PURPOSE KITS	
					FIG. 470 10,500 LB HYDRAULIC WINCH ACCESSORY KIT	
1	PAOZZ	4720014753757	0GZB7	983-88-00C36	HOSE ASSEMBLY,NONME PART OF KIT P/N 57K3541..... UOC:AVY,A13,A14,A24,A25,A26,A27,BVY, B16,B17,B18,B24,B25,C17,HVY,H13,H14, H16,H17,H18,H21,H24,H25,H26,H27,H28, NNN	1
2	PAOZZ	4720014754641	0GZB7	983-88-00C47	HOSE ASSEMBLY,NONME PART OF KIT P/N 57K3541..... UOC:AVY,A13,A14,A24,A25,A26,A27,BVY, B16,B17,B18,B24,B25,C17,HVY,H13,H14, H16,H17,H18,H21,H24,H25,H26,H27,H28, NNN	1
3	PAOZZ	5331005806586	41387	2938-2	O-RING PART OF KIT P/N 57K3541..... UOC:AVY,A13,A14,A24,A25,A26,A27,BVY, B16,B17,B18,B24,B25,C17,HVY,H13,H14, H16,H17,H18,H21,H24,H25,H26,H27,H28, NNN	2
4	PAOZZ	5975010345871	96906	MS3367-7-0	STRAP,TIEDOWN,ELECT PART OF KIT P/N 57K3541..... UOC:AVY,A13,A14,A24,A25,A26,A27,BVY, B16,B17,B18,B24,B25,C17,HVY,H13,H14, H16,H17,H18,H21,H24,H25,H26,H27,H28, NNN	5
5	PAOZZ	6150014731174	19207	12469065-2	LEAD,ELECTRICAL PART OF KIT P/N 57K3541..... UOC:AVY,A13,A14,A24,A25,A26,A27,BVY, B16,B17,B18,B24,B25,C17,HVY,H13,H14, H16,H17,H18,H21,H24,H25,H26,H27,H28, NNN	1
6	PAOZZ		19207	12469067	DECAL PART OF KIT P/N 57K3541..... UOC:AVY,A13,A14,A24,A25,A26,A27,BVY, B16,B17,B18,B24,B25,C17,HVY,H13,H14, H16,H17,H18,H21,H24,H25,H26,H27,H28, NNN	1
7	PAOZZ	5975009846582	56501	TY25M0	STRAP,TIEDOWN,ELECT PART OF KIT P/N 57K3541..... UOC:AVY,A13,A14,A24,A25,A26,A27,BVY, B16,B17,B18,B24,B25,C17,HVY,H13,H14, H16,H17,H18,H21,H24,H25,H26,H27,H28, NNN	2
8	PAOZZ	5305007247254	80204	B1821BH063C400N	SCREW,CAP,HEXAGON H PART OF KIT P/N 57K3541..... UOC:AVY,A13,A14,A24,A25,A26,A27,BVY, B16,B17,B18,B24,B25,C17,HVY,H13,H14, H16,H17,H18,H21,H24,H25,H26,H27,H28, NNN	6
9	PAOZZ	2540014739040	34623	6001553	BRACKET,R.H. TOW HOOK PART OF KIT P/N 57K3541.....	1

(1) ITEM NO	(2) SMR CODE	(3) NSN	(4) CAGEC	(5) PART NUMBER	(6) DESCRIPTION AND USABLE ON CODES(UOC)	(7) QTY
					UOC:AVY,A13,A14,A24,A25,A26,A27,BVY, B16,B17,B18,B24,B25,C17,HVY,H13,H14, H16,H17,H18,H21,H24,H25,H26,H27,H28, NNN	
9	PAOZZ	2540014739045	34623	6001552	BRACKET,L.H. TOW HOOK PART OF KIT P/N 57K3541..... UOC:AVY,A13,A14,A24,A25,A26,A27,BVY, B16,B17,B18,B24,B25,C17,HVY,H13,H14, H16,H17,H18,H21,H24,H25,H26,H27,H28, NNN	1
10	PAOZZ	5310011474052	24617	2436168	WASHER,FLAT PART OF KIT P/N 57K3541. UOC:AVY,A13,A14,A24,A25,A26,A27,BVY, B16,B17,B18,B24,B25,C17,HVY,H13,H14, H16,H17,H18,H21,H24,H25,H26,H27,H28, NNN	2
11	PAOZZ	5310011517347	24617	2436167	WASHER,FLAT PART OF KIT P/N 57K3541. UOC:AVY,A13,A14,A24,A25,A26,A27,BVY, B16,B17,B18,B24,B25,C17,HVY,H13,H14, H16,H17,H18,H21,H24,H25,H26,H27,H28, NNN	2
12	PAOZZ	5310000614651	19207	12387349-43	NUT,SELF-LOCKING,HE PART OF KIT P/N 57K3541..... UOC:AVY,A13,A14,A24,A25,A26,A27,BVY, B16,B17,B18,B24,B25,C17,HVY,H13,H14, H16,H17,H18,H21,H24,H25,H26,H27,H28, NNN	6
13	PAOZZ	5310009359021	96906	MS51943-35	NUT,SELF-LOCKING,HE PART OF KIT P/N 57K3541..... UOC:AVY,A13,A14,A24,A25,A26,A27,BVY, B16,B17,B18,B24,B25,C17,HVY,H13,H14, H16,H17,H18,H21,H24,H25,H26,H27,H28, NNN	4
14	PAOZZ	5305008213869	80204	B1821BH038C175N	SCREW,CAP,HEXAGON H PART OF KIT P/N 57K3541..... UOC:AVY,A13,A14,A24,A25,A26,A27,BVY, B16,B17,B18,B24,B25,C17,HVY,H13,H14, H16,H17,H18,H21,H24,H25,H26,H27,H28, NNN	3
15	PAOZZ		0GZB7	983-92-52000	SPACER PART OF KIT P/N 57K3541..... UOC:AVY,A13,A14,A24,A25,A26,A27,BVY, B16,B17,B18,B24,B25,C17,HVY,H13,H14, H16,H17,H18,H21,H24,H25,H26,H27,H28, NNN	3

END OF FIGURE

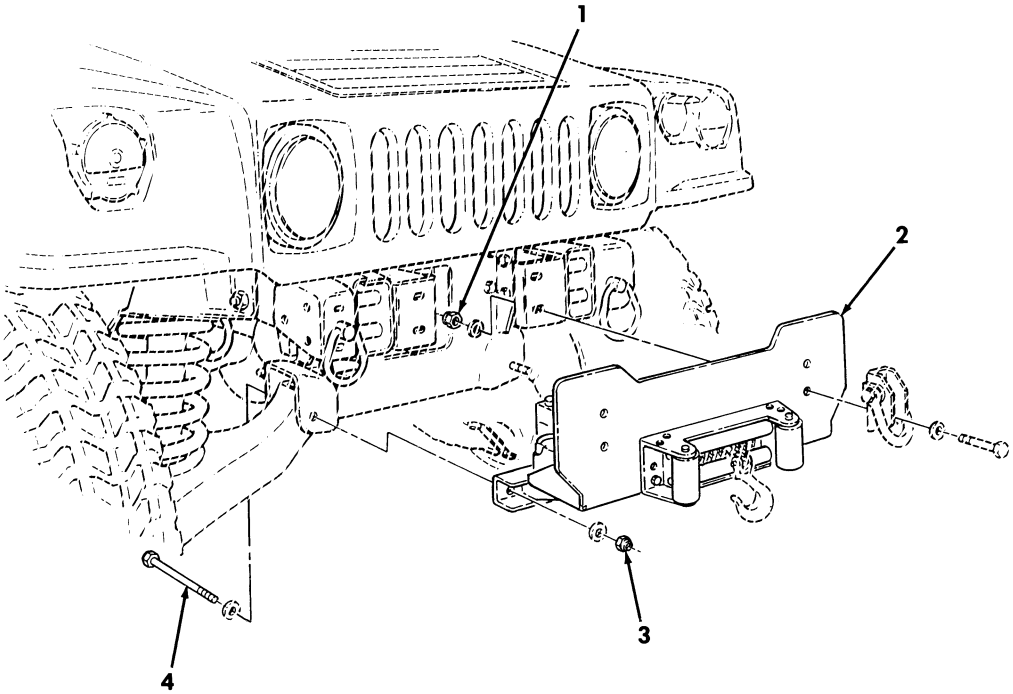

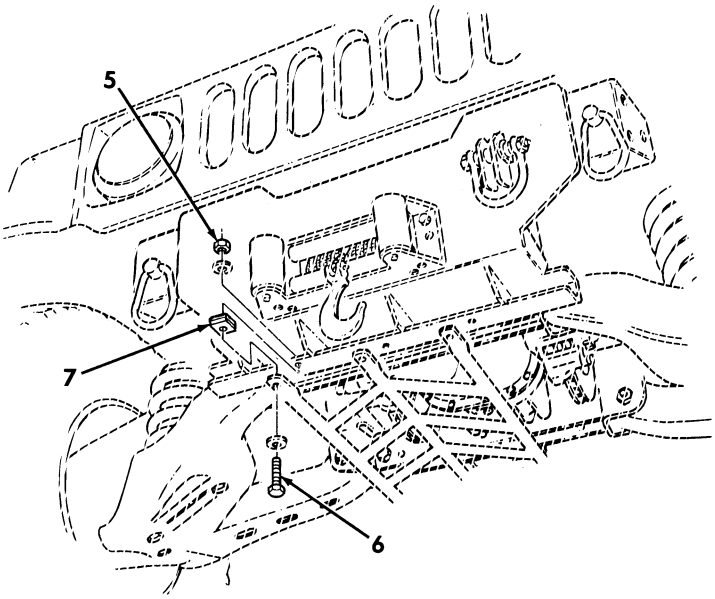

Figure 471. 10,500 Lb Hydraulic Winch Accessory Kit.

(1) ITEM NO	(2) SMR CODE	(3) NSN	(4) CAGEC	(5) PART NUMBER	(6) DESCRIPTION AND USABLE ON CODES(UOC)	(7) QTY
					GROUP 3307 SPECIAL PURPOSE KITS	
					FIG. 471 10,500 LB HYDRAULIC WINCH ACCESSORY KIT	
1	PAOZZ	5310004883889	96906	MS51943-39	NUT,SELF-LOCKING,HE PART OF KIT P/N 57K3541..... UOC:AVY,A13,A14,A24,A25,A26,A27,BVY, B16,B17,B18,B24,B25,C17,HVY,H13,H14, H16,H17,H18,H21,H24,H25,H26,H27,H28, NNN	4
* 2	PAOFF	2590014743326	0GZB7	983-75-50050CV	WINCH,DRUM,VEHICULA PART OF KIT P/N 57K3541..... UOC:AVY,A13,A14,A24,A25,A26,A27,BVY, B16,B17,B18,B24,B25,C17,HVY,H13,H14, H16,H17,H18,H21,H24,H25,H26,H27,H28, NNN	1
3	PAOZZ	5310004093333	96906	MS51943-45	NUT,SELF-LOCKING,HE PART OF KIT P/N 57K3541..... UOC:AVY,A13,A14,A24,A25,A26,A27,BVY, B16,B17,B18,B24,B25,C17,HVY,H13,H14, H16,H17,H18,H21,H24,H25,H26,H27,H28, NNN	2
4	PAOZZ	5305009474363	80204	B1821BH075C550N	SCREW,CAP,HEXAGON H PART OF KIT P/N 57K3541..... UOC:AVY,A13,A14,A24,A25,A26,A27,BVY, B16,B17,B18,B24,B25,C17,HVY,H13,H14, H16,H17,H18,H21,H24,H25,H26,H27,H28, NNN	2
5	PAOZZ	5310009359021	96906	MS51943-35	NUT,SELF-LOCKING,HE PART OF KIT P/N 57K3541..... UOC:AVY,A13,A14,A24,A25,A26,A27,BVY, B16,B17,B18,B24,B25,C17,HVY,H13,H14, H16,H17,H18,H21,H24,H25,H26,H27,H28, NNN	4
6	PAOZZ	5305008213869	80204	B1821BH038C175N	SCREW,CAP,HEXAGON H PART OF KIT P/N 57K3541..... UOC:AVY,A13,A14,A24,A25,A26,A27,BVY, B16,B17,B18,B24,B25,C17,HVY,H13,H14, H16,H17,H18,H21,H24,H25,H26,H27,H28, NNN	3
* 7	PAOZZ	5365014741057	0GZB7	983-92-52000	SPACER,PLATE PART OF KIT P/N 57K3541..... UOC:AVY,A13,A14,A24,A25,A26,A27,BVY, B16,B17,B18,B24,B25,C17,HVY,H13,H14, H16,H17,H18,H21,H24,H25,H26,H27,H28, NNN	3
KIT	PAOZZ	2590014567879	19207	57K3541	PARTS KIT,WINCH..... UOC:AVY,A13,A14,A24,A25,A26,A27,BVY, B16,B17,B18,B24,B25,C17,HVY,H13,H14, H16,H17,H18,H21,H24,H25,H26,H27,H28, NNN	1
					ADAPTER,CONNECTOR (1) 469-10	

(1) ITEM NO	(2) SMR CODE	(3) NSN	(4) CAGEC	(5) PART NUMBER	(6) DESCRIPTION AND USABLE ON CODES(UOC)	(7) QTY
					ADAPTER,CONNECTOR (1) 469-11	
					BLOCK,TACKLE (1) 469-9	
					BRACKET,R.H.TOW HOO(1) 470-9	
					BRACKET,L.H.TOW HOO(1) 470-9	
					CABLE ASSEMBLY,SPEC(1) 469-3	
					CIRCUIT BREAKER (1) 469-13	
					CONTROL,REEL (1) 469-6	
					DECAL (1) 469-5	
					DECAL (1) 470-6	
					HOSE ASSEMBLY,NONME(1) 470-1	
					HOSE ASSEMBLY,NONME(1) 470-2	
					LEAD,ELECTRICAL (1) 469-1	
					LEAD,ELECTRICAL (1) 470-5	
					NUT,SELF-LOCKING,HE(4) 471-1	
					NUT,SELF-LOCKING,HE(6) 470-12	
					NUT,SELF-LOCKING,HE(2) 471-3	
					NUT,SELF-LOCKING,HE(4) 470-13	
					NUT,SELF-LOCKING,HE(4) 471-5	
					O-RING (2) 470-3	
					SCREW,CAP,HEXAGON H(3) 470-14	
					SCREW,CAP,HEXAGON H(6) 470-8	
					SCREW,CAP,HEXAGON H(2) 471-4	
					SCREW,CAP,HEXAGON H(3) 471-6	
					SCREW,TAPPING (2) 469-12	
					SCREW,TAPPING (4) 469-4	
					SPACER (3) 470-15	
					SPACER,PLATE (3) 471-7	
					STRAP,RETAINING (1) 469-8	
					STRAP,TIEDOWN,ELECT(6) 469-2	
					STRAP,TIEDOWN,ELECT(2) 470-7	
					STRAP,TIEDOWN,ELECT(5) 470-4	
					TUBE ASSEMBLY,METAL(1) 469-7	
					WASHER,FLAT (2) 470-10	
					WASHER,FLAT (2) 470-11	
					WINCH,DRUM,VEHICULA(1) 471-2	

END OF FIGURE

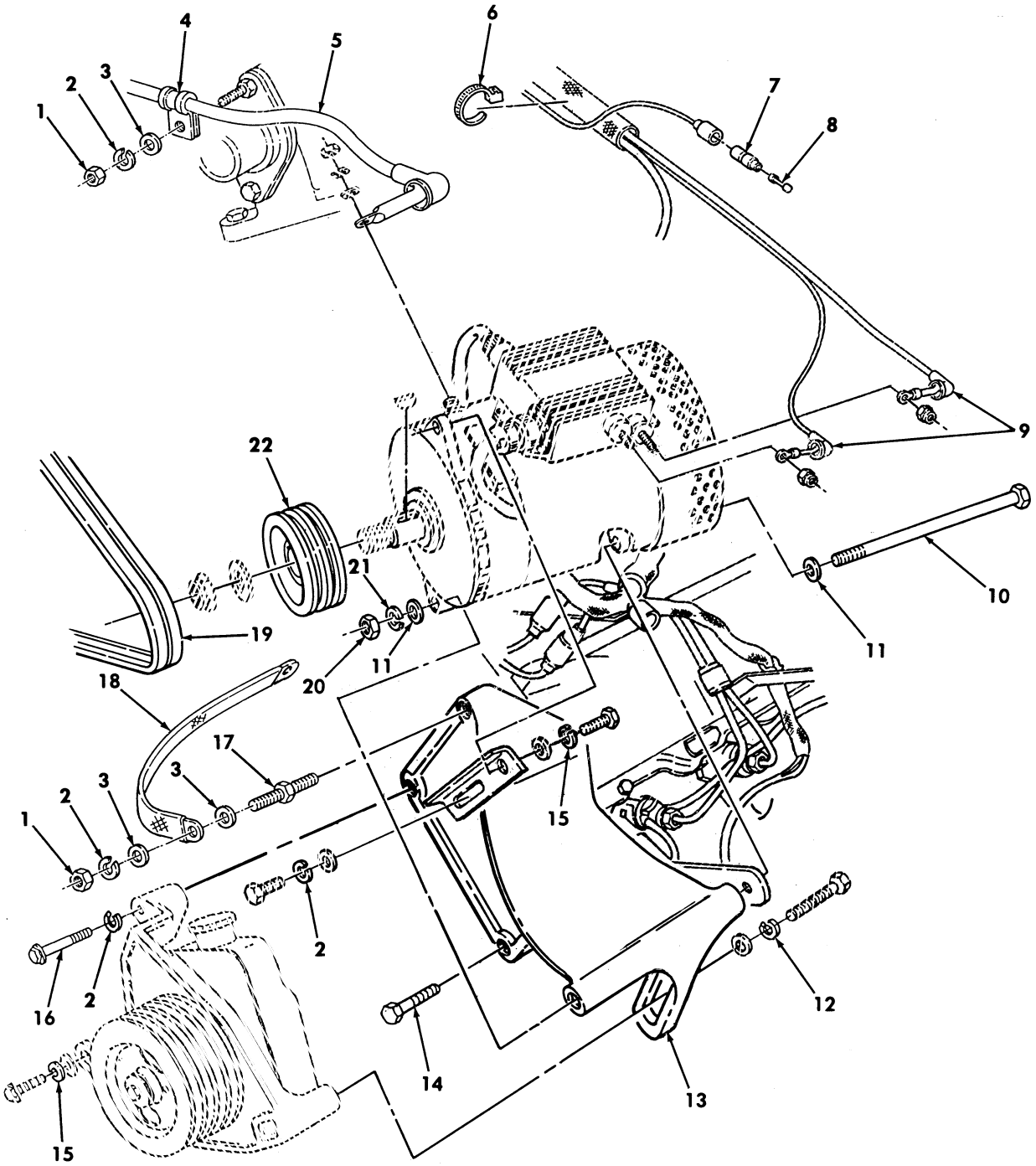

Figure 472. 100 AMP Dual Voltage Alternator and Regulator Mounting Hardware Kit.

(1) ITEM NO	(2) SMR CODE	(3) NSN	(4) CAGEC	(5) PART NUMBER	(6) DESCRIPTION AND USABLE ON CODES(UOC)	(7) QTY
					GROUP 3307 SPECIAL PURPOSE KITS	
					FIG. 472 100 AMP DUAL VOLTAGE ALTERNATOR AND REGULATOR MOUNTING HARDWARE KIT	
1	PAOZZ	5310013958747	80204	B18241B100F	NUT,PLAIN,HEXAGON PART OF KIT P/N 57K3519..... UOC:A11,A13,A14,A20,A24,A25,A26,A27, B17,B18,H11,H13,H14,H17,H18,H20,H21, H24,H25,H26,H27,H28,MMM	2
2	PAOZZ	5310012067306	7X677	11500207	WASHER,LOCK PART OF KIT P/N 57K3519. UOC:A11,A13,A14,A20,A24,A25,A26,A27, B17,B18,H11,H13,H14,H17,H18,H20,H21, H24,H25,H26,H27,H28,MMM	4
3	PAOZZ	5310012101587	7X677	11500256	WASHER,FLAT PART OF KIT P/N 57K3519. UOC:A11,A13,A14,A20,A24,A25,A26,A27, B17,B18,H11,H13,H14,H17,H18,H20,H21, H24,H25,H26,H27,H28,MMM	4
4	PAOZZ	5340000538994	96906	MS21333-126	CLAMP,LOOP PART OF KIT P/N 57K3519.. UOC:A11,A13,A14,A20,A24,A25,A26,A27, B17,B18,H11,H13,H14,H17,H18,H20,H21, H24,H25,H26,H27,H28,MMM	3
5	PAOZZ	6150014676716	19207	12446821-2	CABLE ASSEMBLY,SPEC PART OF KIT P/N 57K3519..... UOC:A11,A13,A14,A20,A24,A25,A26,A27, B17,B18,H11,H13,H14,H17,H18,H20,H21, H24,H25,H26,H27,H28,MMM	1
6	PAOZZ	5975010345871	96906	MS3367-7-0	STRAP,TIEDOWN,ELECT PART OF KIT P/N 57K3519..... UOC:A11,A13,A14,A20,A24,A25,A26,A27, B17,B18,H11,H13,H14,H17,H18,H20,H21, H24,H25,H26,H27,H28,MMM	2
7	PAOZZ	5935008338561	19207	8338561	SHELL,ELECTRICAL CO PART OF KIT P/N 57K3519..... UOC:A11,A13,A14,A20,A24,A25,A26,A27, B17,B18,H11,H13,H14,H17,H18,H20,H21, H24,H25,H26,H27,H28,MMM	1
8	PAOZZ	5935002140904	19207	7982907	DUMMY CONNECTOR,PLU PART OF KIT P/N 57K3519..... UOC:A11,A13,A14,A20,A24,A25,A26,A27, B17,B18,H11,H13,H14,H17,H18,H20,H21, H24,H25,H26,H27,H28,MMM	1
9	PAOZZ	5975014695558	77060	0298 4033	CABLE NIPPLE,ELECTR PART OF KIT P/N 57K3519..... UOC:A11,A13,A14,A20,A24,A25,A26,A27, B17,B18,H11,H13,H14,H17,H18,H20,H21, H24,H25,H26,H27,H28,MMM	2
10	PAOZZ	5305014299149	80204	B1821BH044F975N	SCREW,CAP,HEXAGON H PART OF KIT P/N 57K3519..... UOC:A11,A13,A14,A20,A24,A25,A26,A27, B17,B18,H11,H13,H14,H17,H18,H20,H21, H24,H25,H26,H27,H28,MMM	1

(1) ITEM NO	(2) SMR CODE	(3) NSN	(4) CAGEC	(5) PART NUMBER	(6) DESCRIPTION AND USABLE ON CODES(UOC)	(7) QTY
11	PAOZZ	5310008094085	24617	9420022	WASHER,FLAT PART OF KIT P/N 57K3519. UOC:A11,A13,A14,A20,A24,A25,A26,A27, B17,B18,H11,H13,H14,H17,H18,H20,H21, H24,H25,H26,H27,H28,MMM	2
12	PAOZZ	5310000116121	29510	120384	WASHER,LOCK PART OF KIT P/N 57K3519. UOC:A11,A13,A14,A20,A24,A25,A26,A27, B17,B18,H11,H13,H14,H17,H18,H20,H21, H24,H25,H26,H27,H28,MMM	1
13	PAOZZ	5340014484245	19207	12342036	BRACKET,MOUNTING PART OF KIT P/N 57K3519..... UOC:A11,A13,A14,A20,A24,A25,A26,A27, B17,B18,H11,H13,H14,H17,H18,H20,H21, H24,H25,H26,H27,H28,MMM	1
14	PAOZZ	5306012638889	19207	12340845-2	BOLT,MACHINE PART OF KIT P/N 57K3519 UOC:A11,A13,A14,A20,A24,A25,A26,A27, B17,B18,H11,H13,H14,H17,H18,H20,H21, H24,H25,H26,H27,H28,MMM	1
15	PAOZZ	5310006379541	96906	MS35338-46	WASHER,LOCK PART OF KIT P/N 57K3519. UOC:A11,A13,A14,A20,A24,A25,A26,A27, B17,B18,H11,H13,H14,H17,H18,H20,H21, H24,H25,H26,H27,H28,MMM	1
16	PAOZZ	5306012643531	19207	12340845-4	BOLT,MACHINE PART OF KIT P/N 57K3519 UOC:A11,A13,A14,A20,A24,A25,A26,A27, B17,B18,H11,H13,H14,H17,H18,H20,H21, H24,H25,H26,H27,H28,MMM	1
17	PAOZZ	5307014655796	19207	12339406-4	STUD,SHOULDERED PART OF KIT P/N 57K3519..... UOC:A11,A13,A14,A20,A24,A25,A26,A27, B17,B18,H11,H13,H14,H17,H18,H20,H21, H24,H25,H26,H27,H28,MMM	1
18	PAOZZ	6150014667528	19207	12446821-6	CABLE ASSEMBLY,SPEC PART OF KIT P/N 57K3519..... UOC:A11,A13,A14,A20,A24,A25,A26,A27, B17,B18,H11,H13,H14,H17,H18,H20,H21, H24,H25,H26,H27,H28,MMM	1
19	PAOZZ	3030012826968	34623	12339359-12	BELTS,V,MATCHED SET PART OF KIT P/N 57K3519..... UOC:A11,A13,A14,A20,A24,A25,A26,A27, B17,B18,H11,H13,H14,H17,H18,H20,H21, H24,H25,H26,H27,H28,MMM	1
20	PAOZZ	5310014573171	24617	9417028	NUT,PLAIN,HEXAGON PART OF KIT P/N 57K3519..... UOC:A11,A13,A14,A20,A24,A25,A26,A27, B17,B18,H11,H13,H14,H17,H18,H20,H21, H24,H25,H26,H27,H28,MMM	1
21	PAOZZ	5310002090965	96906	MS35338-47	WASHER,LOCK PART OF KIT P/N 57K3519. UOC:A11,A13,A14,A20,A24,A25,A26,A27, B17,B18,H11,H13,H14,H17,H18,H20,H21, H24,H25,H26,H27,H28,MMM	1
22	PAOZZ	3020012048132	19207	12339412	PULLEY,GROOVE PART OF KIT P/N 57K3519..... UOC:A11,A13,A14,A20,A24,A25,A26,A27, B17,B18,H11,H13,H14,H17,H18,H20,H21,	1

(1) ITEM NO	(2) SMR CODE	(3) NSN	(4) CAGEC	(5) PART NUMBER	(6) DESCRIPTION AND USABLE ON CODES(UOC)	(7) QTY
					H24,H25,H26,H27,H28,MMM	

END OF FIGURE

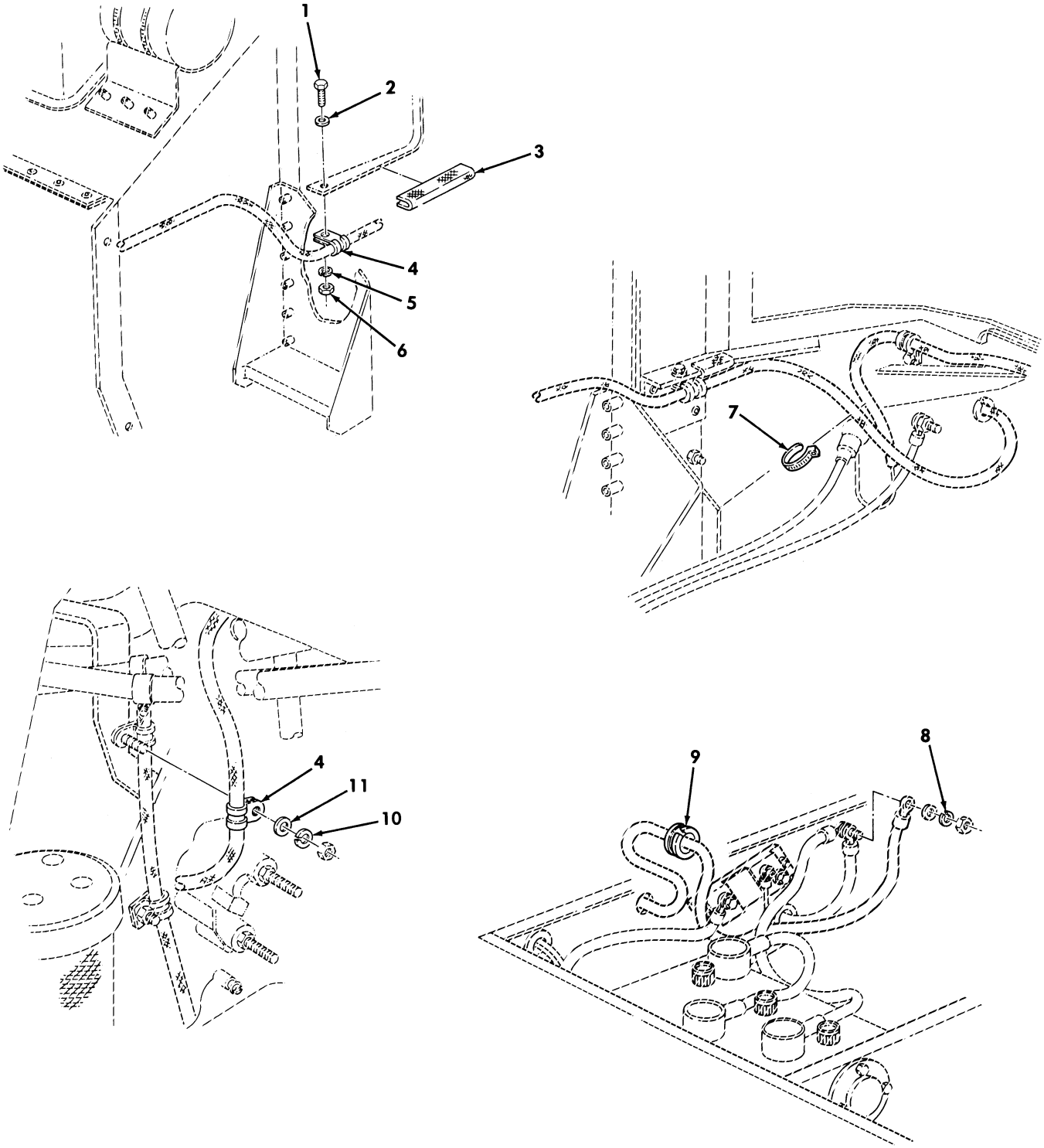

Figure 473. 100/200 AMP Dual Voltage Alternator and Regulator Mounting Hardware Kit.

(1) ITEM NO	(2) SMR CODE	(3) NSN	(4) CAGEC	(5) PART NUMBER	(6) DESCRIPTION AND USABLE ON CODES(UOC)	(7) QTY
					GROUP 3307 SPECIAL PURPOSE KITS	
					FIG. 473 100/200 AMP DUAL VOLTAGE ALTERNATOR AND REGULATOR MOUNTING HARDWARE KIT	
1	PAOZZ	5306002264827	80204	B1821BH031C100N	BOLT,MACHINE PART OF KIT P/N 57K3520 PART OF KIT P/N 57K3519..... UOC:A11,A13,A14,A20,A24,A25,A26,A27, B17,B18,H11,H13,H14,H17,H18,H20,H21, H24,H25,H26,H27,H28,MMM	1
2	PAOZZ	5310000814219	96906	MS27183-12	WASHER,FLAT PART OF KIT P/N 57K3520 PART OF KIT P/N 57K3519..... UOC:A11,A13,A14,A20,A24,A25,A26,A27, B17,B18,H11,H13,H14,H17,H18,H20,H21, H24,H25,H26,H27,H28,MMM	1
3	MOOZZ		19207	12340103-4	BEZEL,AUTOMOTIVE TR MAKE FROM BEZEL, P/N 12340103,4 INCHES LONG PART OF KIT P/N 57K3519 PART OF KIT P/N 57K3520..... UOC:A11,A13,A14,A20,A24,A25,A26,A27, B17,B18,H11,H13,H14,H17,H18,H20,H21, H24,H25,H26,H27,H28,MMM	1
4	PAOZZ	5340007022848	96906	MS21333-128	CLAMP,LOOP PART OF KIT P/N 57K3520.. UOC:A11,A13,A14,A20,A24,A25,A26,A27, B17,B18,H11,H13,H14,H17,H18,H20,H21, H24,H25,H26,H27,H28,MMM	2
5	PAOZZ	5310004079566	96906	MS-35338-45	WASHER,LOCK PART OF KIT P/N 57K3520 PART OF KIT P/N 57K3519..... UOC:A11,A13,A14,A20,A24,A25,A26,A27, B17,B18,H11,H13,H14,H17,H18,H20,H21, H24,H25,H26,H27,H28,MMM	1
6	PAOZZ	5310009318167	96906	MS51967-6	NUT,PLAIN,HEXAGON PART OF KIT P/N 57K3520 PART OF KIT P/N 57K3519..... UOC:A11,A13,A14,A20,A24,A25,A26,A27, B17,B18,H11,H13,H14,H17,H18,H20,H21, H24,H25,H26,H27,H28,MMM	1
7	PAOZZ	5975010345871	96906	MS3367-7-0	STRAP,TIEDOWN,ELECT PART OF KIT P/N 57K3520 PART OF KIT P/N 57K3519..... UOC:A11,A13,A14,A20,A24,A25,A26,A27, B17,B18,H11,H13,H14,H17,H18,H20,H21, H24,H25,H26,H27,H28,MMM	1
8	PAOZZ	5310011867066	13445	85031	WASHER,LOCK PART OF KIT P/N 57K3520 PART OF KIT P/N 57K3519..... UOC:A11,A13,A14,A20,A24,A25,A26,A27, B17,B18,H11,H13,H14,H17,H18,H20,H21, H24,H25,H26,H27,H28,MMM	1
9	PAOZZ	5325002766343	96906	MS35489-23	GROMMET,NONMETALLIC PART OF KIT P/N 57K3520 PART OF KIT P/N 57K3519..... UOC:A11,A13,A14,A20,A24,A25,A26,A27, B17,B18,H11,H13,H14,H17,H18,H20,H21, H24,H25,H26,H27,H28,MMM	1
10	PAOZZ	5310012067306	7X677	11500207	WASHER,LOCK PART OF KIT P/N 57K3520	1

(1) ITEM NO	(2) SMR CODE	(3) NSN	(4) CAGEC	(5) PART NUMBER	(6) DESCRIPTION AND USABLE ON CODES(UOC)	(7) QTY
					PART OF KIT P/N 57K3519..... UOC:A11,A13,A14,A20,A24,A25,A26,A27, B17,B18,H11,H13,H14,H17,H18,H20,H21, H24,H25,H26,H27,H28,MMM	
11	PAOZZ	5310012101587	7X677	11500256	WASHER,FLAT PART OF KIT P/N 57K3520	1
					PART OF KIT P/N 57K3519..... UOC:A11,A13,A14,A20,A24,A25,A26,A27, B17,B18,H11,H13,H14,H17,H18,H20,H21, H24,H25,H26,H27,H28,MMM	

END OF FIGURE

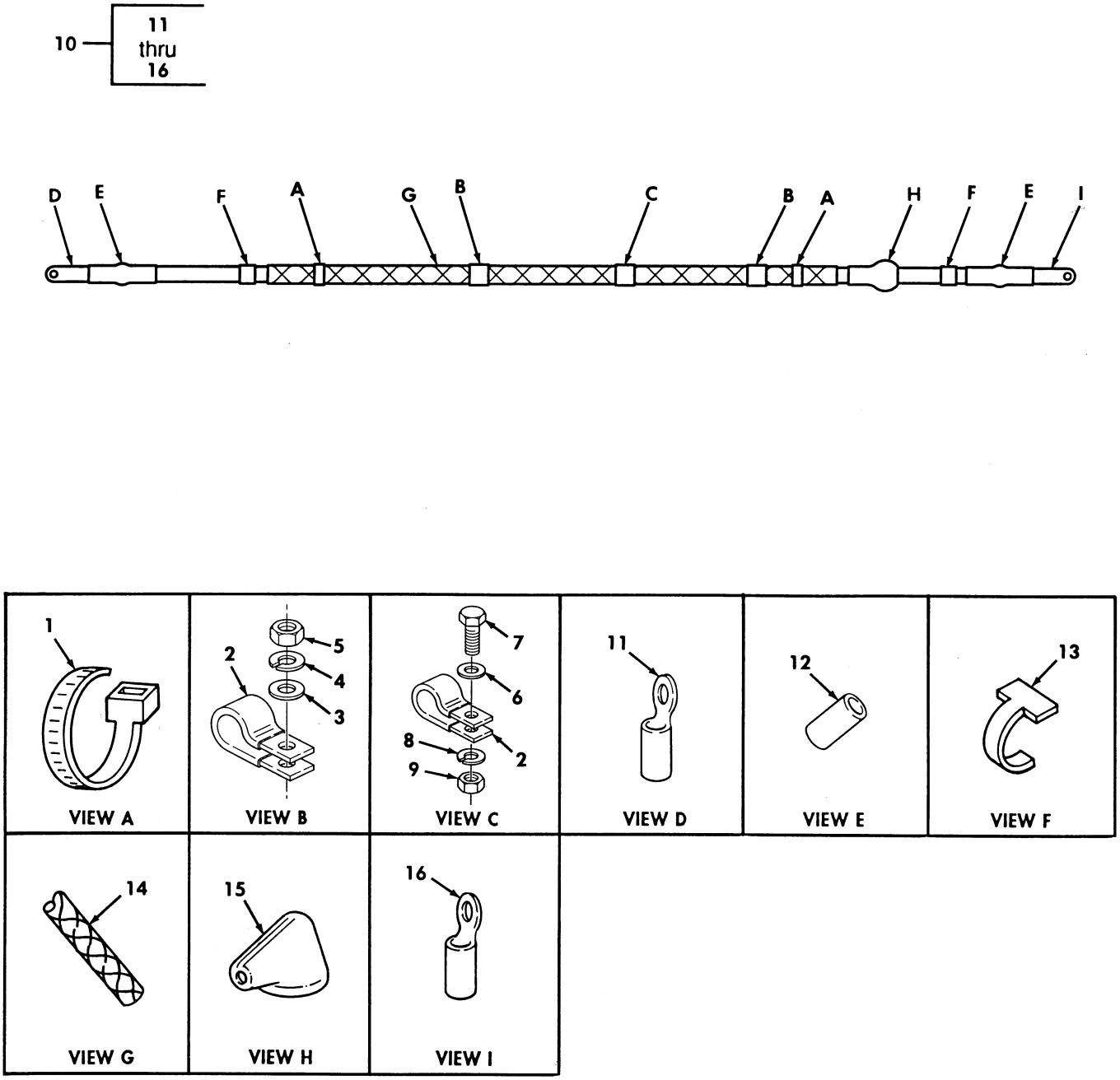

Figure 474. 100/200 AMP Dual Voltage Alternator Wiring Harness.

(1) ITEM NO	(2) SMR CODE	(3) NSN	(4) CAGEC	(5) PART NUMBER	(6) DESCRIPTION AND USABLE ON CODES(UOC)	(7) QTY
					GROUP 3307 SPECIAL PURPOSE KITS	
					FIG. 474 100/200 AMP DUAL VOLTAGE ALTERNATOR WIRING HARNESS	
* 1	PAOZZ	5975010345871	96906	MS3367-7-0	STRAP,TIEDOWN,ELECT PART OF KIT P/N 57K3519,PART OF KIT P/N 57K3520..... UOC:A11,A13,A14,A20,A24,A25,A26,A27, B17,B18,H11,H13,H14,H17,H18,H20,H21, H24,H25,H26,H27,H28,MMM	4
2	PAOZZ	5340000538994	96906	MS21333-126	CLAMP,LOOP 100AMP PART OF KIT P/N 57K3519..... UOC:A11,A13,A14,A20,A24,A25,A26,A27, B17,B18,H11,H13,H14,H17,H18,H20,H21, H24,H25,H26,H27,H28,MMM	3
2	PAOZZ	5340007022848	96906	MS21333-128	CLAMP,LOOP 200AMP PART OF KIT P/N 57K3520..... UOC:A11,A13,A14,A20,A24,A25,A26,A27, B17,B18,H11,H13,H14,H17,H18,H20,H21, H24,H25,H26,H27,H28,MMM	3
3	PAOZZ	5310012101587	7X677	11500256	WASHER,FLAT PART OF KIT P/N 57K3519, PART OF KIT P/N 57K3520..... UOC:A11,A13,A14,A20,A24,A25,A26,A27, B17,B18,H11,H13,H14,H17,H18,H20,H21, H24,H25,H26,H27,H28,MMM	2
4	PAOZZ	5310012067306	7X677	11500207	WASHER,LOCK PART OF KIT P/N 57K3519, PART OF KIT P/N 57K3520..... UOC:A11,A13,A14,A20,A24,A25,A26,A27, B17,B18,H11,H13,H14,H17,H18,H20,H21, H24,H25,H26,H27,H28,MMM	2
5	PAOZZ	5310013958747	80204	B18241B100F	NUT,PLAIN,HEXAGON PART OF KIT P/N 57K3519,PART OF KIT P/N 57K3520..... UOC:A11,A13,A14,A20,A24,A25,A26,A27, B17,B18,H11,H13,H14,H17,H18,H20,H21, H24,H25,H26,H27,H28,MMM	2
6	PAOZZ	5310000814219	96906	MS27183-12	WASHER,FLAT PART OF KIT P/N 57K3519, PART OF KIT P/N 57K3520..... UOC:A11,A13,A14,A20,A24,A25,A26,A27, B17,B18,H11,H13,H14,H17,H18,H20,H21, H24,H25,H26,H27,H28,MMM	1
7	PAOZZ	5306002264827	80204	B1821BH031C100N	BOLT,MACHINE PART OF KIT P/N 57K3519 ,PART OF KIT P/N 57K3520..... UOC:A11,A13,A14,A20,A24,A25,A26,A27, B17,B18,H11,H13,H14,H17,H18,H20,H21, H24,H25,H26,H27,H28,MMM	1
8	PAOZZ	5310004079566	96906	MS35338-45	WASHER,LOCK PART OF KIT P/N 57K3519, PART OF KIT P/N 57K3520..... UOC:A11,A13,A14,A20,A24,A25,A26,A27, B17,B18,H11,H13,H14,H17,H18,H20,H21, H24,H25,H26,H27,H28,MMM	1
9	PAOZZ	5310009318167	96906	MS51967-6	NUT,PLAIN,HEXAGON PART OF KIT P/N 57K3519,PART OF KIT P/N 57K3520..... UOC:A11,A13,A14,A20,A24,A25,A26,A27,	1

(1) ITEM NO	(2) SMR CODE	(3) NSN	(4) CAGEC	(5) PART NUMBER	(6) DESCRIPTION AND USABLE ON CODES(UOC)	(7) QTY
					B17,B18,H11,H13,H14,H17,H18,H20,H21, H24,H25,H26,H27,H28,MMM	
10	PAOZZ	6150014173411	19207	12446821-2	CABLE ASSEMBLY,SPEC 100 AMP PART OF KIT P/N 57K3519..... UOC:A11,A13,A14,A20,A24,A25,A26,A27, B17,B18,H11,H13,H14,H17,H18,H20,H21, H24,H25,H26,H27,H28,MMM	1
10	PAOZZ	6150014167899	19207	12446825	LEAD,ELECTRICAL 200AMP PART OF KIT P/N 57K3520..... UOC:A11,A13,A14,A20,A24,A25,A26,A27, B17,B18,H11,H13,H14,H17,H18,H20,H21, H24,H25,H26,H27,H28,MMM	1
11	PAOZZ	5940011704956	19207	8689221	.TERMINAL LUG 100AMP PART OF KIT P/N 57K3519..... UOC:A11,A13,A14,A20,A24,A25,A26,A27, B17,B18,H11,H13,H14,H17,H18,H20,H21, H24,H25,H26,H27,H28,MMM	1
* 11	PAOZZ	5940007355520	56501	TG33	.TERMINAL,LUG 200AMP PART OF KIT P/N 57K3520..... UOC:A11,A13,A14,A20,A24,A25,A26,A27, B17,B18,H11,H13,H14,H17,H18,H20,H21, H24,H25,H26,H27,H28,MMM	1
* 12	MOOZZ		81349	M23053/4-304-2-2	.INSULATION SLEEVING MAKE FROM INSULATION,P/N M23053/4-304-2,2 INCHES LONG,PART OF KIT P/N 57K3519, PART OF KIT P/N 57K3520..... UOC:A11,A13,A14,A20,A24,A25,A26,A27, B17,B18,H11,H13,H14,H17,H18,H20,H21, H24,H25,H26,H27,H28,MMM	2
13	PAOZZ	9905008933570	81349	M43436/1-3	.BAND,MARKER PART OF KIT P/N 57K3519,PART OF KIT P/N 57K3520..... UOC:A11,A13,A14,A20,A24,A25,A26,A27, B17,B18,H11,H13,H14,H17,H18,H20,H21, H24,H25,H26,H27,H28,MMM	2
14	MOOZZ		9D117	SAEJ562	.LOOM NONMETALLIC MAKE FROM TUBING, P/N AE208-10,LENGTH TO SUIT,PART OF KIT P/N 57K3519,PART OF KIT P/N 57K3520..... UOC:A11,A13,A14,A20,A24,A25,A26,A27, B17,B18,H11,H13,H14,H17,H18,H20,H21, H24,H25,H26,H27,H28,MMM	1
* 15	PAOZZ	5340014496854	20722	9609A383-002	.BOOT,DUST AND MOIST 100 AMP PART OF KIT P/N 57K3519..... UOC:A11,A13,A14,A20,A24,A25,A26,A27, B17,B18,H11,H13,H14,H17,H18,H20,H21, H24,H25,H26,H27,H28,MMM	1
15	PAOZZ	5975012089618	19207	12339710	.CABLE NIPPLE,ELECTR 200AMP PART OF KIT P/N 57K3520..... UOC:A11,A13,A14,A20,A24,A25,A26,A27, B17,B18,H11,H13,H14,H17,H18,H20,H21, H24,H25,H26,H27,H28,MMM	1
16	PAOZZ	5940001152678	96906	MS20659-111	.TERMINAL,LUG 100AMP PART OF KIT P/N 57K3519.....	1

(1) ITEM NO	(2) SMR CODE	(3) NSN	(4) CAGEC	(5) PART NUMBER	(6) DESCRIPTION AND USABLE ON CODES(UOC)	(7) QTY
					UOC:A11,A13,A14,A20,A24,A25,A26,A27, B17,B18,H11,H13,H14,H17,H18,H20,H21, H24,H25,H26,H27,H28,MMM	
16	PAOZZ	5940001155006	96906	MS25036-133	.TERMINAL,LUG 200AMP PART OF KIT P/N 57K3520.....	1
					UOC:A11,A13,A14,A20,A24,A25,A26,A27, B17,B18,H11,H13,H14,H17,H18,H20,H21, H24,H25,H26,H27,H28,MMM	
KIT	PAOZZ	2920014551626	19207	57K3519	PARTS KIT ENGINE.GE.....	1
					UOC:A11,A13,A14,A20,A24,A25,A26,A27, B17,B18,H11,H13,H14,H17,H18,H20,H21, H24,H25,H26,H27,H28,MMM	
					BAND,MARKER (2) 474-13	
					BELTS,V,MATCHED SET(1) 472-19	
					BEZEL,AUTOMOTIVE TR(1) 473-3	
					BOLT,MACHINE (1) 472-14	
					BOLT,MACHINE (1) 472-16	
					BOLT,MACHINE (1) 473-1	
					BOLT,MACHINE (1) 474-7	
					BOOT,DUST AND MOIST(1) 474-15	
					BRACKET,MOUNTING (1) 472-13	
					CABLE ASSEMBLY,SPEC(1) 472-5	
					CABLE ASSEMBLY,SPEC(1) 472-18	
					CABLE ASSEMBLY,SPEC(1) 474-10	
					CABLE NIPPLE,ELECTR(2) 472-9	
					CLAMP,LOOP (3) 472-4	
					CLAMP,LOOP (3) 474-2	
					DUMMY CONNECTOR,PLU(1) 472-8	
					GROMMET,NONMETALLIC(1) 473-9	
					INSULATION SLEEVING(2) 474-12	
					LOOM NONMETALLIC (1) 474-14	
					NUT,PLAIN,HEXAGON (2) 472-1	
					NUT,PLAIN,HEXAGON (1) 472-20	
					NUT,PLAIN,HEXAGON (1) 473-6	
					NUT,PLAIN,HEXAGON (2) 474-5	
					NUT,PLAIN,HEXAGON (1) 474-9	
					PULLEY,GROOVE (1) 472-22	
					SCREW,CAP,HEXAGON H(1) 472-10	
					SHELL,ELECTRICAL CO(1) 472-7	
					STRAP,TIEDOWN,ELECT(2) 472-6	
					STRAP,TIEDOWN,ELECT(1) 473-7	
					STRAP,TIEDOWN,ELECT(4) 474-1	
					STUD,SHOULDERED (1) 472-17	
					TERMINAL,LUG (1) 474-11	
					TERMINAL,LUG (1) 474-16	
					WASHER,FLAT (4) 472-3	
					WASHER,FLAT (2) 472-11	
					WASHER,FLAT (1) 473-2	
					WASHER,FLAT (1) 473-11	
					WASHER,FLAT (2) 474-3	
					WASHER,FLAT (1) 474-6	
					WASHER,LOCK (4) 472-2	
					WASHER,LOCK (1) 472-12	

(1) ITEM NO	(2) SMR CODE	(3) NSN	(4) CAGEC	(5) PART NUMBER	(6) DESCRIPTION AND USABLE ON CODES(UOC)	(7) QTY
					WASHER,LOCK (1) 472-15	
					WASHER,LOCK (1) 472-21	
					WASHER,LOCK (1) 473-5	
					WASHER,LOCK (1) 473-8	
					WASHER,LOCK (1) 473-10	
					WASHER,LOCK (2) 474-4	
					WASHER,LOCK (1) 474-8	

END OF FIGURE

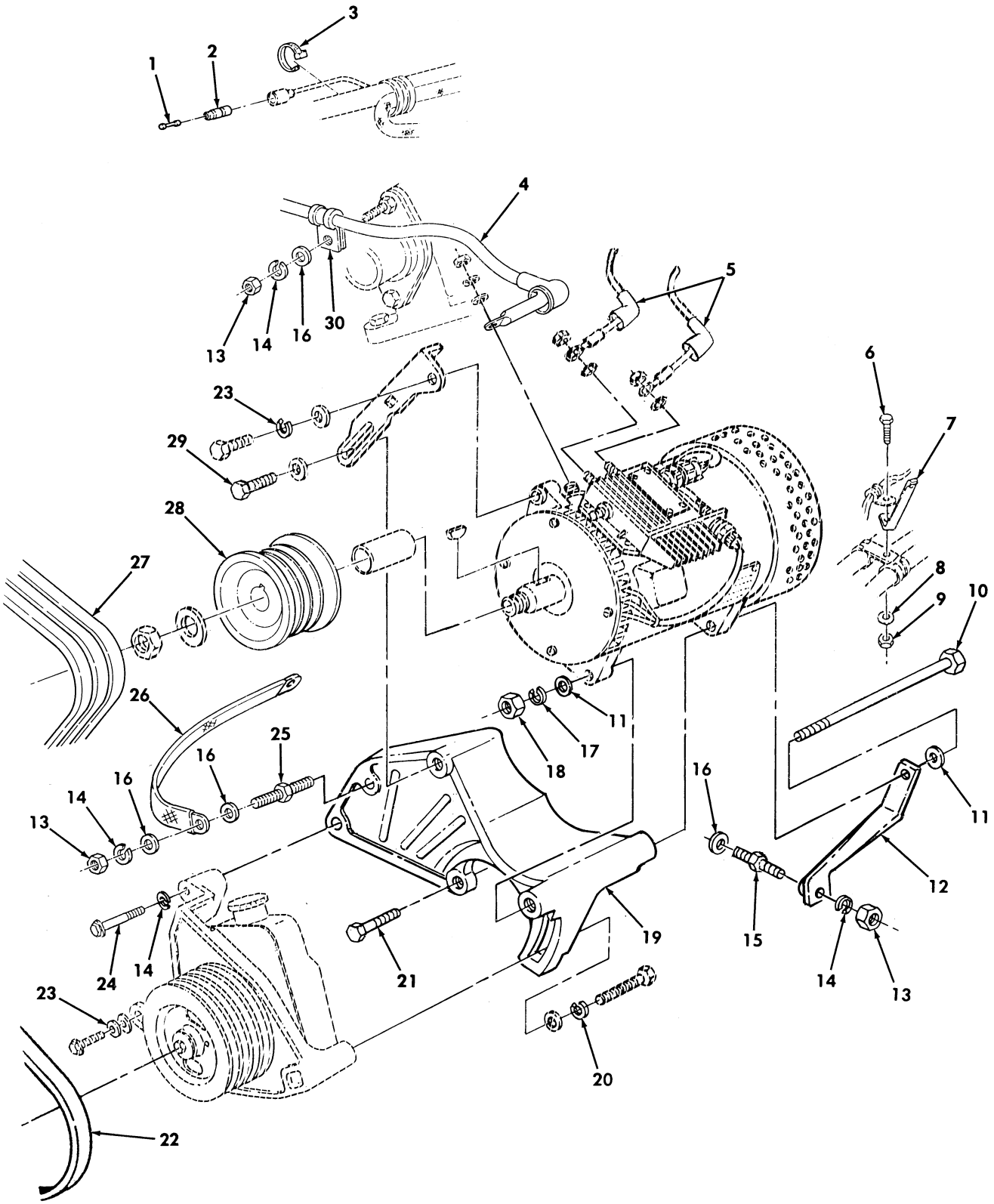

Figure 475. 200 AMP Dual Voltage Alternator and Regulator Mounting Hardware Kit.

(1) ITEM NO	(2) SMR CODE	(3) NSN	(4) CAGEC	(5) PART NUMBER	(6) DESCRIPTION AND USABLE ON CODES(UOC)	(7) QTY
					GROUP 3307 SPECIAL PURPOSE KITS	
					FIG. 475 200 AMP DUAL VOLTAGE ALTERNATOR AND REGULATOR MOUNTING HARDWARE KIT	
1	PAOZZ	5935002140904	19207	7982907	DUMMY CONNECTOR,PLU PART OF KIT P/N 57K3520..... UOC:A11,A13,A14,A20,A24,A25,A26,A27, B17,B18,H11,H13,H14,H17,H18,H20,H21, H24,H25,H26,H27,H28,MMM	1
2	PAOZZ	5935008338561	19207	8338561	SHELL,ELECTRICAL CO PART OF KIT P/N 57K3520..... UOC:A11,A13,A14,A20,A24,A25,A26,A27, B17,B18,H11,H13,H14,H17,H18,H20,H21, H24,H25,H26,H27,H28,MMM	1
3	PAOZZ	5975010345871	96906	MS3367-7-0	STRAP,TIEDOWN,ELECT PART OF KIT P/N 57K3520..... UOC:A11,A13,A14,A20,A24,A25,A26,A27, B17,B18,H11,H13,H14,H17,H18,H20,H21, H24,H25,H26,H27,H28,MMM	1
4	PAOZZ	6150014167899	19207	12446825	LEAD,ELECTRICAL PART OF KIT P/N 57K3520..... UOC:A11,A13,A14,A20,A24,A25,A26,A27, B17,B18,H11,H13,H14,H17,H18,H20,H21, H24,H25,H26,H27,H28,MMM	1
5	PAOZZ	5975014695558	77060	0298 4033	CABLE NIPPLE,ELECTR PART OF KIT P/N 57K3520..... UOC:A11,A13,A14,A20,A24,A25,A26,A27, B17,B18,H11,H13,H14,H17,H18,H20,H21, H24,H25,H26,H27,H28,MMM	2
6	PAOZZ	5305002253843	80204	B1821BH025C100N	SCREW,CAP,HEXAGON H PART OF KIT P/N 57K3520..... UOC:A11,A13,A14,A20,A24,A25,A26,A27, B17,B18,H11,H13,H14,H17,H18,H20,H21, H24,H25,H26,H27,H28,MMM	1
7	PAOZZ	5340012925402	19207	12342076	BRACKET,DOUBLE ANGL PART OF KIT P/N 57K3520..... UOC:A11,A13,A14,A20,A24,A25,A26,A27, B17,B18,H11,H13,H14,H17,H18,H20,H21, H24,H25,H26,H27,H28,MMM	1
8	PAOZZ	5310008094058	96906	MS27183-10	WASHER,FLAT PART OF KIT P/N 57K3520. UOC:A11,A13,A14,A20,A24,A25,A26,A27, B17,B18,H11,H13,H14,H17,H18,H20,H21, H24,H25,H26,H27,H28,MMM	1
9	PAOZZ	5310000614650	96906	MS51943-31	NUT,SELF-LOCKING,HE PART OF KIT P/N 57K3520..... UOC:A11,A13,A14,A20,A24,A25,A26,A27, B17,B18,H11,H13,H14,H17,H18,H20,H21, H24,H25,H26,H27,H28,MMM	1
10	PAOZZ	5305014299149	80204	B1821BH044F975N	SCREW,CAP,HEXAGON H PART OF KIT P/N 57K3520..... UOC:A11,A13,A14,A20,A24,A25,A26,A27,	1

(1) ITEM NO	(2) SMR CODE	(3) NSN	(4) CAGEC	(5) PART NUMBER	(6) DESCRIPTION AND USABLE ON CODES(UOC)	(7) QTY
					B17,B18,H11,H13,H14,H17,H18,H20,H21, H24,H25,H26,H27,H28,MMM	
11	PAOZZ	5310008094085	96906	MS27183-16	WASHER,FLAT PART OF KIT P/N 57K3520. UOC:A11,A13,A14,A20,A24,A25,A26,A27, B17,B18,H11,H13,H14,H17,H18,H20,H21, H24,H25,H26,H27,H28,MMM	2
12	PAOZZ	5340012928404	34623	5935092	BRACKET,MOUNTING PART OF KIT P/N 57K3520..... UOC:A11,A13,A14,A20,A24,A25,A26,A27, B17,B18,H11,H13,H14,H17,H18,H20,H21, H24,H25,H26,H27,H28,MMM	1
13	PAOZZ	5310013958747	80204	B18241B100F	NUT,PLAIN,HEXAGON PART OF KIT P/N 57K3520..... UOC:A11,A13,A14,A20,A24,A25,A26,A27, B17,B18,H11,H13,H14,H17,H18,H20,H21, H24,H25,H26,H27,H28,MMM	3
14	PAOZZ	5310012067306	7X677	11500207	WASHER,LOCK PART OF KIT P/N 57K3520. UOC:A11,A13,A14,A20,A24,A25,A26,A27, B17,B18,H11,H13,H14,H17,H18,H20,H21, H24,H25,H26,H27,H28,MMM	4
15	PAOZZ	5307013153597	19207	12339406-3	STUD,SHOULDERED PART OF KIT P/N 57K3520..... UOC:A11,A13,A14,A20,A24,A25,A26,A27, B17,B18,H11,H13,H14,H17,H18,H20,H21, H24,H25,H26,H27,H28,MMM	1
16	PAOZZ	5310012101587	7X677	11500256	WASHER,FLAT PART OF KIT P/N 57K3520. UOC:A11,A13,A14,A20,A24,A25,A26,A27, B17,B18,H11,H13,H14,H17,H18,H20,H21, H24,H25,H26,H27,H28,MMM	4
17	PAOZZ	5310002090965	96906	MS35338-47	WASHER,LOCK PART OF KIT P/N 57K3520. UOC:A11,A13,A14,A20,A24,A25,A26,A27, B17,B18,H11,H13,H14,H17,H18,H20,H21, H24,H25,H26,H27,H28,MMM	1
18	PAOZZ	5310014573171	24617	9417028	NUT,PLAIN,HEXAGON PART OF KIT P/N 57K3520..... UOC:A11,A13,A14,A20,A24,A25,A26,A27, B17,B18,H11,H13,H14,H17,H18,H20,H21, H24,H25,H26,H27,H28,MMM	1
19	PAOZZ	2590014444365	34623	12338786-1	BRACKET,VEHICULAR C PART OF KIT P/N 57K3520..... UOC:A11,A13,A14,A20,A24,A25,A26,A27, B17,B18,H11,H13,H14,H17,H18,H20,H21, H24,H25,H26,H27,H28,MMM	1
20	PAOZZ	5310000116121	29510	120384	WASHER,LOCK PART OF KIT P/N 57K3520. UOC:A11,A13,A14,A20,A24,A25,A26,A27, B17,B18,H11,H13,H14,H17,H18,H20,H21, H24,H25,H26,H27,H28,MMM	1
21	PAOZZ	5306012638889	19207	12340845-2	BOLT,MACHINE PART OF KIT P/N 57K3520 UOC:A11,A13,A14,A20,A24,A25,A26,A27, B17,B18,H11,H13,H14,H17,H18,H20,H21, H24,H25,H26,H27,H28,MMM	1
22	PAOZZ	3030014526591	19207	12339359-14	BELTING,V PART OF KIT P/N 57K3520... UOC:A11,A13,A14,A20,A24,A25,A26,A27,	1

(1) ITEM NO	(2) SMR CODE	(3) NSN	(4) CAGEC	(5) PART NUMBER	(6) DESCRIPTION AND USABLE ON CODES(UOC)	(7) QTY
					B17,B18,H11,H13,H14,H17,H18,H20,H21, H24,H25,H26,H27,H28,MMM	
23	PAOZZ	5310006379541	96906	MS35338-46	WASHER,LOCK PART OF KIT P/N 57K3520. UOC:A11,A13,A14,A20,A24,A25,A26,A27, B17,B18,H11,H13,H14,H17,H18,H20,H21, H24,H25,H26,H27,H28,MMM	2
24	PAOZZ	5306012643531	19207	12340845-4	BOLT,MACHINE PART OF KIT P/N 57K3520 UOC:A11,A13,A14,A20,A24,A25,A26,A27, B17,B18,H11,H13,H14,H17,H18,H20,H21, H24,H25,H26,H27,H28,MMM	1
25	PAOZZ	5307014084029	19207	12342545	STUD,SHOULDERED PART OF KIT P/N 57K3520..... UOC:A11,A13,A14,A20,A24,A25,A26,A27, B17,B18,H11,H13,H14,H17,H18,H20,H21, H24,H25,H26,H27,H28,MMM	1
26	PAOZZ	5999013725601	19207	12341151	STRIP,ELECTRICAL GR PART OF KIT P/N 57K3520..... UOC:A11,A13,A14,A20,A24,A25,A26,A27, B17,B18,H11,H13,H14,H17,H18,H20,H21, H24,H25,H26,H27,H28,MMM	1
27	PAOZZ	3030013214482	19207	12339359-18	BELTS,V,MATCHED SET PART OF KIT P/N 57K3520..... UOC:A11,A13,A14,A20,A24,A25,A26,A27, B17,B18,H11,H13,H14,H17,H18,H20,H21, H24,H25,H26,H27,H28,MMM	1
28	PAOZZ	3020012329629	19207	12339392	PULLEY,GROOVE PART OF KIT P/N 57K3520..... UOC:A11,A13,A14,A20,A24,A25,A26,A27, B17,B18,H11,H13,H14,H17,H18,H20,H21, H24,H25,H26,H27,H28,MMM	1
29	PAOZZ	5306011140963	80204	B1821BH038C100L	BOLT,MACHINE..... UOC:A11,A13,A14,A20,A24,A25,A26,A27, B17,B18,H11,H13,H14,H17,H18,H20,H21, H24,H25,H26,H27,H28,MMM	1
30	PAOZZ	5340007022848	96906	MS21333-128	CLAMP,LOOP PART OF KIT P/N 57K3520.. UOC:A11,A13,A14,A20,A24,A25,A26,A27, B17,B18,H11,H13,H14,H17,H18,H20,H21, H24,H25,H26,H27,H28,MMM	2
KIT	PAOZZ	2920014551630	19207	57K3520	PARTS KIT,ENGINE GE 200-AMP DUAL VOLTAGE ALTERNATOR..... UOC:A11,A13,A14,A20,A24,A25,A26,A27, B17,B18,H11,H13,H14,H17,H18,H20,H21, H24,H25,H26,H27,H28,MMM	1
					BAND,MARKER (2) 474-13	
					BELTING,V (1) 475-22	
					BELTS,V,MATCHED SET(1) 475-27	
					BEZEL,AUTOMOTIVE TR(1) 473-3	
					BOLT,MACHINE (1) 473-1	
					BOLT,MACHINE (1) 474-7	
					BOLT,MACHINE (1) 475-21	
					BOLT,MACHINE (1) 475-24	
					BRACKET,DOUBLE ANGL(1) 475-7	
					BRACKET,MOUNTING (1) 475-12	

(1) ITEM NO	(2) SMR CODE	(3) NSN	(4) CAGEC	(5) PART NUMBER	(6) DESCRIPTION AND USABLE ON CODES(UOC)	(7) QTY
					BRACKET,VEHICULAR C(1) 475-19	
					CABLE NIPPLE,ELECTR(1) 474-15	
					CABLE NIPPLE,ELECTR(2) 475-5	
					CLAMP,LOOP (2) 473-4	
					CLAMP,LOOP (3) 474-2	
					CLAMP,LOOP (2) 475-30	
					DUMMY CONNECTOR,PLU(1) 475-1	
					GROMMET,NONMETALLIC(1) 473-9	
					INSULATION SLEEVING(2) 474-12	
					LEAD,ELECTRICAL (1) 474-10	
					LEAD,ELECTRICAL (1) 475-4	
					LOOM NONMETALLIC (1) 474-14	
					NUT,PLAIN,HEXAGON (1) 473-6	
					NUT,PLAIN,HEXAGON (2) 474-5	
					NUT,PLAIN,HEXAGON (1) 474-9	
					NUT,PLAIN,HEXAGON (1) 475-18	
					NUT,PLAIN,HEXAGON (3) 475-13	
					NUT,SELF-LOCKING,HE(1) 475-9	
					PULLEY,GROOVE (1) 475-28	
					SCREW,CAP,HEXAGON H(1) 475-6	
					SCREW,CAP,HEXAGON H(1) 475-10	
					SHELL,ELECTRICAL CO(1) 475-2	
					STRAP,TIEDOWN,ELECT(1) 473-7	
					STRAP,TIEDOWN,ELECT(4) 474-1	
					STRAP,TIEDOWN,ELECT(1) 475-3	
					STRIP,ELECTRICAL GR(1) 475-26	
					STUD,SHOULDERED (1) 475-15	
					STUD,SHOULDERED (1) 475-25	
					TERMINAL,LUG (1) 474-11	
					TERMINAL,LUG (1) 474-16	
					WASHER,FLAT (1) 473-2	
					WASHER,FLAT (1) 473-11	
					WASHER,FLAT (2) 474-3	
					WASHER,FLAT (1) 474-6	
					WASHER,FLAT (1) 475-8	
					WASHER,FLAT (2) 475-11	
					WASHER,FLAT (4) 475-16	
					WASHER,LOCK (1) 473-5	
					WASHER,LOCK (1) 473-8	
					WASHER,LOCK (1) 473-10	
					WASHER,LOCK (2) 474-4	
					WASHER,LOCK (1) 474-8	
					WASHER,LOCK (1) 475-17	
					WASHER,LOCK (4) 475-14	
					WASHER,LOCK (1) 475-20	
					WASHER,LOCK (2) 475-23	

END OF FIGURE

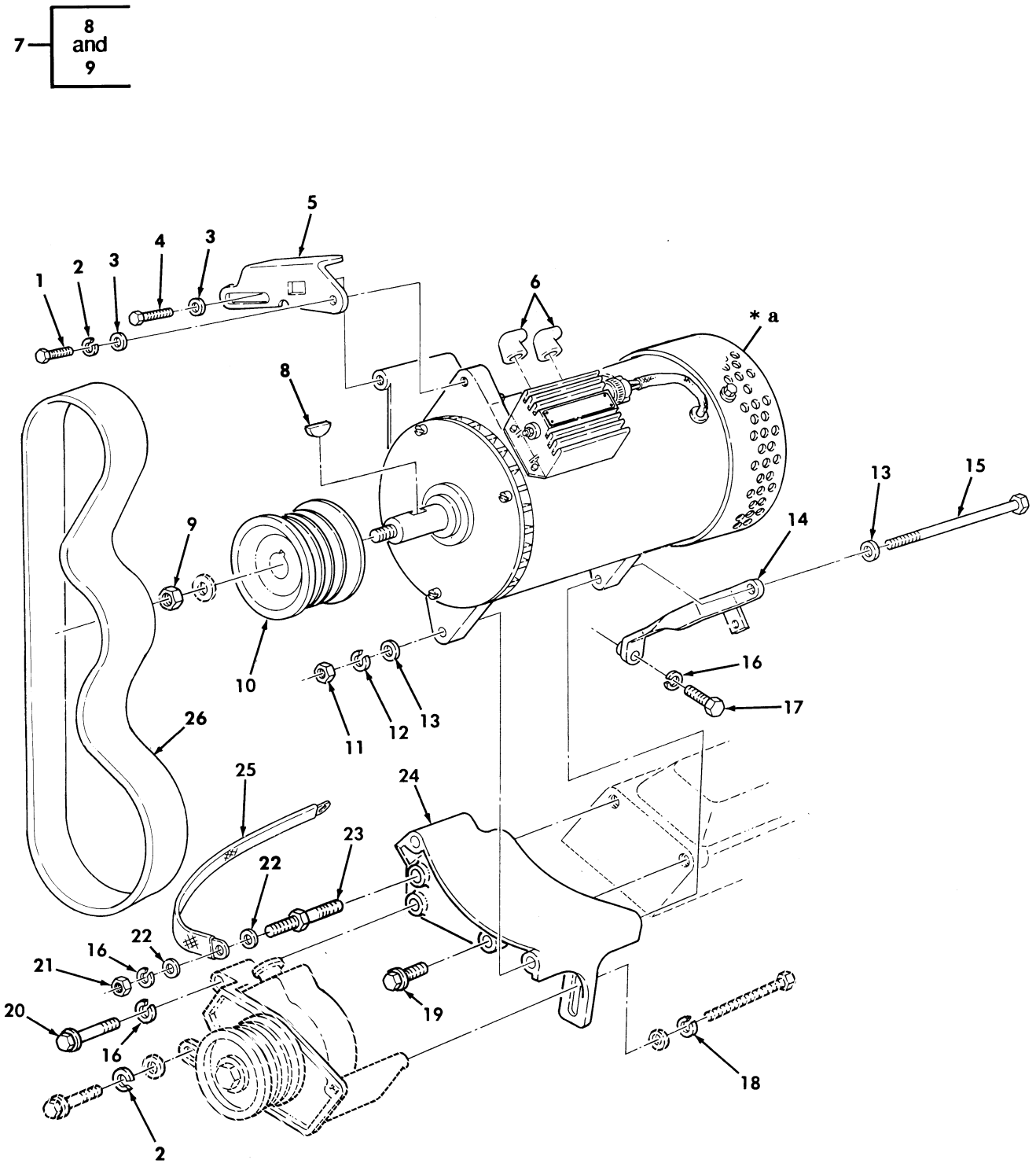

* a PART OF ITEM 7

Figure 476. 400 AMP Alternator Kit.

(1) ITEM NO	(2) SMR CODE	(3) NSN	(4) CAGEC	(5) PART NUMBER	(6) DESCRIPTION AND USABLE ON CODES(UOC)	(7) QTY
					GROUP 3307 SPECIAL PURPOSE KITS	
					FIG. 476 400 AMP ALTERNATOR KIT	
1	PAOZZ	5305000680510	80204	B1821BH038C100N	SCREW,CAP,HEXAGON H 3/8-16X1.00 PART OF KIT P/N 57K0273..... UOC:AVY,A11,A13,A14,A20,A24,A25,A26, A27,B17,B18,HVY,H11,H13,H14,H17,H18, H20,H21,H24,H25,H26,H27,H28,MMM	1
2	PAOZZ	5310006379541	96906	MS35338-46	WASHER,LOCK 3/8 PART OF KIT P/N 57K0273..... UOC:AVY,A11,A13,A14,A20,A24,A25,A26, A27,B17,B18,HVY,H11,H13,H14,H17,H18, H20,H21,H24,H25,H26,H27,H28,MMM	2
3	PAOZZ	5310014124013	24617	2436163	WASHER,FLAT 3/8 PART OF KIT P/N 57K0273..... UOC:AVY,A11,A13,A14,A20,A24,A25,A26, A27,B17,B18,HVY,H11,H13,H14,H17,H18, H20,H21,H24,H25,H26,H27,H28,MMM	2
4	PAOZZ	5306011140963	80204	B1821BH038C100L	BOLT,MACHINE 3/8 PART OF KIT P/N 57K0273..... UOC:AVY,A11,A13,A14,A20,A24,A25,A26, A27,B17,B18,HVY,H11,H13,H14,H17,H18, H20,H21,H24,H25,H26,H27,H28,MMM	1
5	PAOZA	5342014666276	19207	12446758	BRACKET,ENGINE ACCE 3/8 PART OF KIT P/N 57K0273..... UOC:AVY,A11,A13,A14,A20,A24,A25,A26, A27,B17,B18,HVY,H11,H13,H14,H17,H18, H20,H21,H24,H25,H26,H27,H28,MMM	1
6	PAOZZ	5975014695558	77060	0298 4033	CABLE NIPPLE,ELECTR 3/8 PART OF KIT P/N 57K0273..... UOC:AVY,A11,A13,A14,A20,A24,A25,A26, A27,B17,B18,HVY,H11,H13,H14,H17,H18, H20,H21,H24,H25,H26,H27,H28,MMM	2
7	PAOZZ	2920014661855	76761	N1602-1	GENERATOR,ENGINE AC 400 AMP PART OF KIT P/N 57K0273..... UOC:AVY,A11,A13,A14,A20,A24,A25,A26, A27,B17,B18,HVY,H11,H13,H14,H17,H18, H20,H21,H24,H25,H26,H27,H28,MMM	1
8	PAOZZ	5315006165501	80205	MS35756-20	.KEY,WOODRUFF 3/8 PART OF KIT P/N 57K0273..... UOC:AVY,A11,A13,A14,A20,A24,A25,A26, A27,B17,B18,HVY,H11,H13,H14,H17,H18, H20,H21,H24,H25,H26,H27,H28,MMM	1
9	PAOZZ	5310004190876	96906	MS21245-L12	.NUT,SELF-LOCKING,HE 3/4-16X1.00 PART OF KIT P/N 57K0273..... UOC:AVY,A11,A13,A14,A20,A24,A25,A26, A27,B17,B18,HVY,H11,H13,H14,H17,H18, H20,H21,H24,H25,H26,H27,H28,MMM	1
10	PAOZZ	3020014663603	34623	12446753	PULLEY,GROOVE PART OF KIT P/N 57K0273..... UOC:AVY,A11,A13,A14,A20,A24,A25,A26, A27,B17,B18,HVY,H11,H13,H14,H17,H18,	1

(1) ITEM NO	(2) SMR CODE	(3) NSN	(4) CAGEC	(5) PART NUMBER	(6) DESCRIPTION AND USABLE ON CODES(UOC)	(7) QTY
					H20,H21,H24,H25,H26,H27,H28,MMM	
11	PAOZZ	5310007638906	96906	MS51968-18	NUT,PLAIN,HEXAGON PART OF KIT P/N 57K0273..... UOC:AVY,A11,A13,A14,A20,A24,A25,A26, A27,B17,B18,HVY,H11,H13,H14,H17,H18, H20,H21,H24,H25,H26,H27,H28,MMM	1
12	PAOZZ	5310001670680	96906	MS35338-49	WASHER,LOCK PART OF KIT P/N 57K0273. UOC:AVY,A11,A13,A14,A20,A24,A25,A26, A27,B17,B18,HVY,H11,H13,H14,H17,H18, H20,H21,H24,H25,H26,H27,H28,MMM	1
13	PAOZZ	5310006560114	96906	MS15795-819	WASHER,FLAT PART OF KIT P/N 57K0273. UOC:AVY,A11,A13,A14,A20,A24,A25,A26, A27,B17,B18,HVY,H11,H13,H14,H17,H18, H20,H21,H24,H25,H26,H27,H28,MMM	2
14	PAOZA	5342014666280	19207	12460502	BRACKET,ENGINE ACCE PART OF KIT P/N 57K0273..... UOC:AVY,A11,A13,A14,A20,A24,A25,A26, A27,B17,B18,HVY,H11,H13,H14,H17,H18, H20,H21,H24,H25,H26,H27,H28,MMM	1
15	PAOZZ	5305014753014	80204	B1821BH056F950N	BOLT,SHOULDER PART OF KIT P/N 57K0273..... UOC:AVY,A11,A13,A14,A20,A24,A25,A26, A27,B17,B18,HVY,H11,H13,H14,H17,H18, H20,H21,H24,H25,H26,H27,H28,MMM	1
16	PAOZZ	5310012067306	7X677	11500207	WASHER,LOCK M10 PART OF KIT P/N 57K0273..... UOC:AVY,A11,A13,A14,A20,A24,A25,A26, A27,B17,B18,HVY,H11,H13,H14,H17,H18, H20,H21,H24,H25,H26,H27,H28,MMM	3
17	PAOZZ	5305012433759	7X677	14060130	SCREW,CAP,HEXAGON H M10 X 1.5 X 40 PART OF KIT P/N 57K0273..... UOC:AVY,A11,A13,A14,A20,A24,A25,A26, A27,B17,B18,HVY,H11,H13,H14,H17,H18, H20,H21,H24,H25,H26,H27,H28,MMM	1
18	PAOZZ	5310000116121	29510	120384	WASHER,LOCK 1/2 PART OF KIT P/N 57K0273..... UOC:AVY,A11,A13,A14,A20,A24,A25,A26, A27,B17,B18,HVY,H11,H13,H14,H17,H18, H20,H21,H24,H25,H26,H27,H28,MMM	1
19	PAOZZ	5306012638889	19207	12340845-2	BOLT,MACHINE M10-1.50 X 30 PART OF KIT P/N 57K0273..... UOC:AVY,A11,A13,A14,A20,A24,A25,A26, A27,B17,B18,HVY,H11,H13,H14,H17,H18, H20,H21,H24,H25,H26,H27,H28,MMM	1
20	PAOZZ	5306012643531	19207	12340845-4	BOLT,MACHINE M10-1.5 X 100 PART OF KIT P/N 57K0273..... UOC:AVY,A11,A13,A14,A20,A24,A25,A26, A27,B17,B18,HVY,H11,H13,H14,H17,H18, H20,H21,H24,H25,H26,H27,H28,MMM	1
21	PAOZZ	5310013958747	80204	B18241B100F	NUT,PLAIN,HEXAGON PART OF KIT P/N 57K0273..... UOC:AVY,A11,A13,A14,A20,A24,A25,A26, A27,B17,B18,HVY,H11,H13,H14,H17,H18,	1

(1) ITEM NO	(2) SMR CODE	(3) NSN	(4) CAGEC	(5) PART NUMBER	(6) DESCRIPTION AND USABLE ON CODES(UOC)	(7) QTY
					H20,H21,H24,H25,H26,H27,H28,MMM	
22	PAOZZ	5310012101587	7X677	11500256	WASHER,FLAT 10MM PART OF KIT P/N 57K0273..... UOC:AVY,A11,A13,A14,A20,A24,A25,A26, A27,B17,B18,HVY,H11,H13,H14,H17,H18, H20,H21,H24,H25,H26,H27,H28,MMM	2
23	PAOZZ	5307014084029	19207	12342545	STUD,SHOULDERED PART OF KIT P/N 57K0273..... UOC:AVY,A11,A13,A14,A20,A24,A25,A26, A27,B17,B18,HVY,H11,H13,H14,H17,H18, H20,H21,H24,H25,H26,H27,H28,MMM	1
24	PAOZA	5342014666283	19207	12446755	BRACKET,ENGINE ACCE PART OF KIT P/N 57K0273..... UOC:AVY,A11,A13,A14,A20,A24,A25,A26, A27,B17,B18,HVY,H11,H13,H14,H17,H18, H20,H21,H24,H25,H26,H27,H28,MMM	1
25	PAOZZ	5999013725601	19207	12341151	STRIP,ELECTRICAL GR PART OF KIT P/N 57K0273..... UOC:AVY,A11,A13,A14,A20,A24,A25,A26, A27,B17,B18,HVY,H11,H13,H14,H17,H18, H20,H21,H24,H25,H26,H27,H28,MMM	1
26	PAOZA	3030014665387	19207	12339359-28	V-BELT SET 58 INCHES LONG PART OF KIT P/N 57K0273..... UOC:AVY,A11,A13,A14,A20,A24,A25,A26, A27,B17,B18,HVY,H11,H13,H14,H17,H18, H20,H21,H24,H25,H26,H27,H28,MMM	1

END OF FIGURE

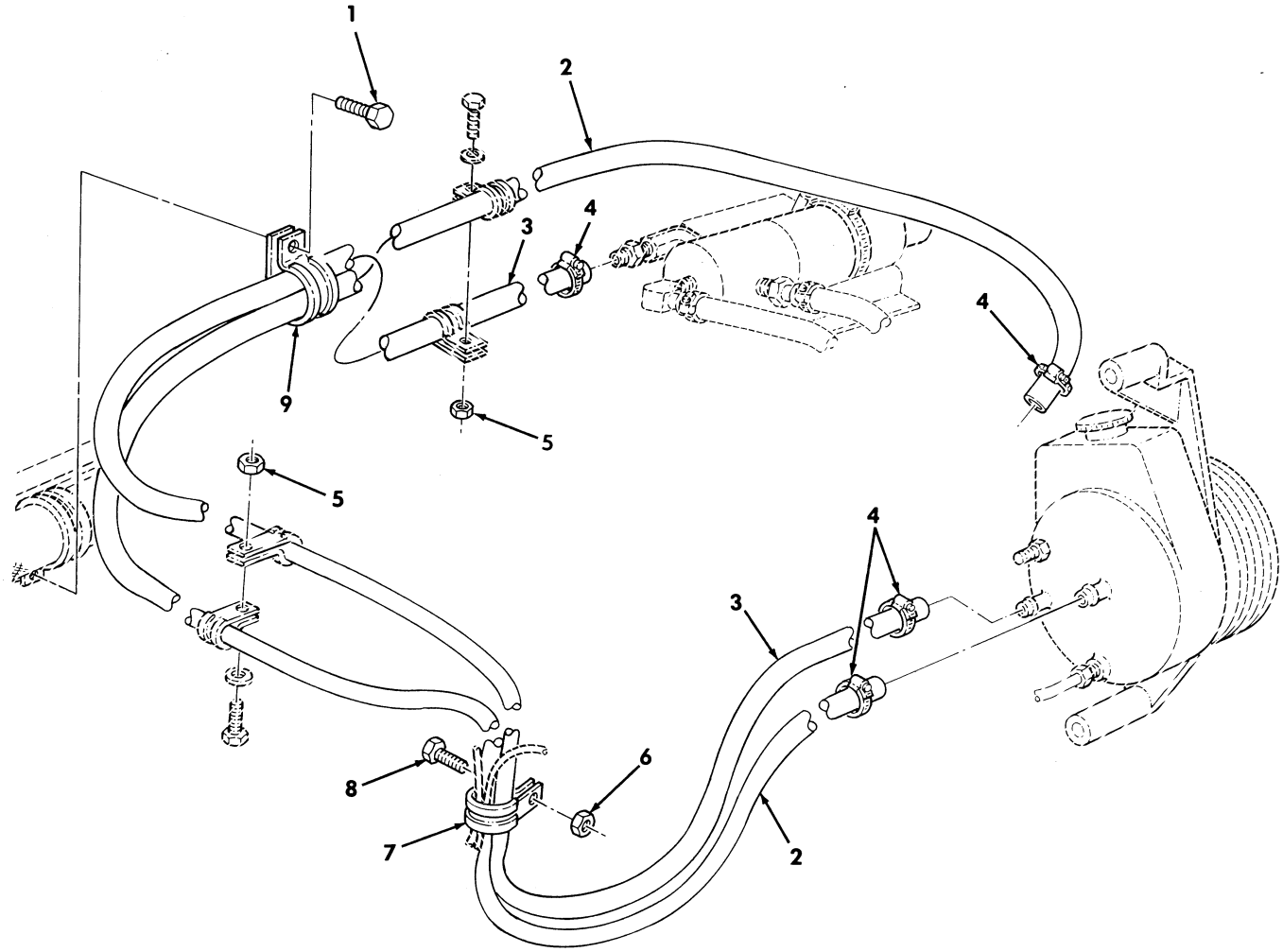

Figure 477. Power Steering Pump Hoses-400 AMP Alternator Kit.

(1) ITEM NO	(2) SMR CODE	(3) NSN	(4) CAGEC	(5) PART NUMBER	(6) DESCRIPTION AND USABLE ON CODES(UOC)	(7) QTY
					GROUP 3307 SPECIAL PURPOSE KITS	
					FIG. 477 POWER STEERING PUMP HOSES-400 AMP ALTERNATOR KIT	
1	PAOZZ	5305012068401	7X677	448655	SCREW,TAPPING PART OF KIT P/N 57K0273..... UOC:AVY,A11,A13,A14,A20,A24,A25,A26, A27,B17,B18,HVY,H11,H13,H14,H17,H18, H20,H21,H24,H25,H26,H27,H28,MMM	1
2	MOOZZ		19207	12338330-9	HOSE,NONMETALLIC MAKE FRON HOSE,P/N 6490610019,51 INCHES LONG PART OF KIT P/N 57K0273..... UOC:AVY,A11,A13,A14,A20,A24,A25,A26, A27,B17,B18,HVY,H11,H13,H14,H17,H18, H20,H21,H24,H25,H26,H27,H28,MMM	1
3	MOOZZ		19207	12338330-8	HOSE,NONMETALLIC MAKE FROM HOSE,P/N 6490610019,37 INCHES LONG PART OF KIT P/N 57K0273..... UOC:AVY,A11,A13,A14,A20,A24,A25,A26, A27,B17,B18,HVY,H11,H13,H14,H17,H18, H20,H21,H24,H25,H26,H27,H28,MMM	1
4	PAOZZ	4730008776298	18876	8486066	CLAMP,HOSE PART OF KIT P/N 57K0273.. UOC:AVY,A11,A13,A14,A20,A24,A25,A26, A27,B17,B18,HVY,H11,H13,H14,H17,H18, H20,H21,H24,H25,H26,H27,H28,MMM	4
5	PAOZZ	5310000614650	96906	MS51943-31	NUT,SELF-LOCKING,HE 1/4-20 PART OF KIT P/N 57K0273..... UOC:AVY,A11,A13,A14,A20,A24,A25,A26, A27,B17,B18,HVY,H11,H13,H14,H17,H18, H20,H21,H24,H25,H26,H27,H28,MMM	2
6	PAOZZ	5310001249265	72582	271169	NUT,PLAIN,ASSEMBLED #10-32 PART OF KIT P/N 57K0273..... UOC:AVY,A11,A13,A14,A20,A24,A25,A26, A27,B17,B18,HVY,H11,H13,H14,H17,H18, H20,H21,H24,H25,H26,H27,H28,MMM	1
7	PAOZZ	5340009291794	96906	MS21334-31	CLAMP,LOOP PART OF KIT P/N 57K0273.. UOC:AVY,A11,A13,A14,A20,A24,A25,A26, A27,B17,B18,HVY,H11,H13,H14,H17,H18, H20,H21,H24,H25,H26,H27,H28,MMM	1
8	PAOZZ	5305011432328	72582	454065	SCREW,CAP,HEXAGON H #10-32X3/4 PART OF KIT P/N 57K0273..... UOC:AVY,A11,A13,A14,A20,A24,A25,A26, A27,B17,B18,HVY,H11,H13,H14,H17,H18, H20,H21,H24,H25,H26,H27,H28,MMM	1
9	PAOZZ	5340004381836	19207	7397780	CLAMP,LOOP PART OF KIT P/N 57K0273.. UOC:AVY,A11,A13,A14,A20,A24,A25,A26, A27,B17,B18,HVY,H11,H13,H14,H17,H18, H20,H21,H24,H25,H26,H27,H28,MMM	1

END OF FIGURE

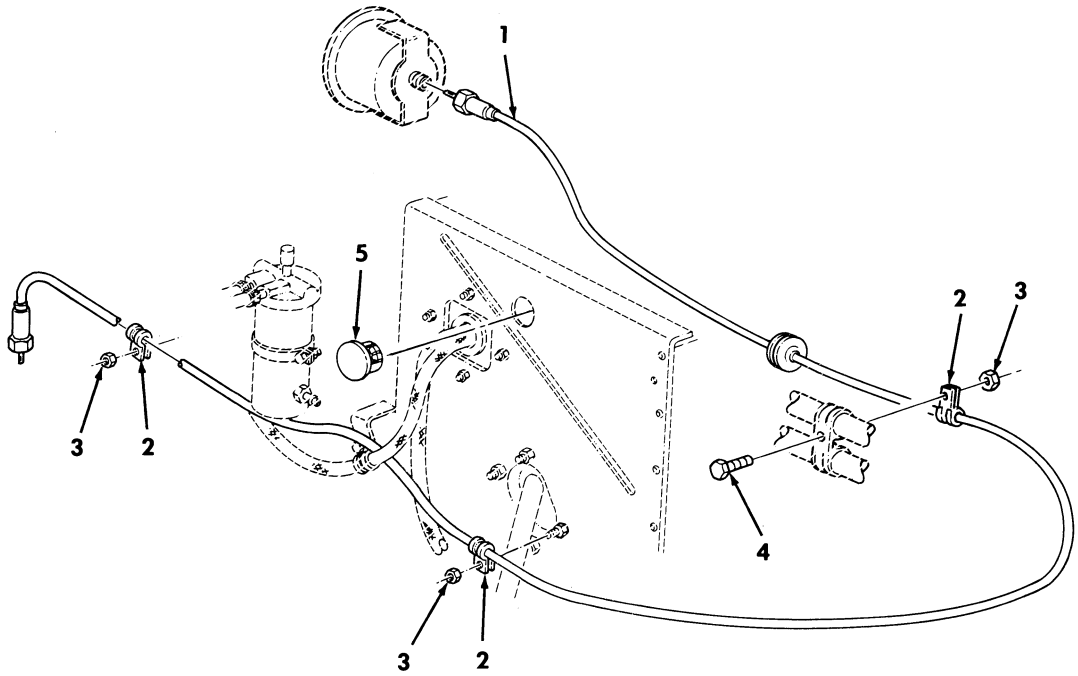

Figure 478. Speedometer Cable Assembly-400 AMP Alternator Kit.

(1) ITEM NO	(2) SMR CODE	(3) NSN	(4) CAGEC	(5) PART NUMBER	(6) DESCRIPTION AND USABLE ON CODES(UOC)	(7) QTY
					GROUP 3307 SPECIAL PURPOSE KITS	
					FIG. 478 SPEEDOMETER CABLE ASSEMBLY-400 AMP ALTERNATOR KIT	
1	PAOZZ	6680014429413	19200	12338428-2	SHAFT ASSEMBLY,FLEX PART OF KIT P/N 57K0273..... UOC:AVY,A11,A13,A14,A20,A24,A25,A26, A27,B17,B18,HVY,H11,H13,H14,H17,H18, H20,H21,H24,H25,H26,H27,H28,MMM	1
2	PAOZZ	5340008091492	81348	CMDX2-3PT573036	CLAMP,LOOP PART OF KIT P/N 57K0273.. UOC:AVY,A11,A13,A14,A20,A24,A25,A26, A27,B17,B18,HVY,H11,H13,H14,H17,H18, H20,H21,H24,H25,H26,H27,H28,MMM	3
3	PAOZZ	5310000614650	96906	MS51943-31	NUT,SELF-LOCKING,HE 1/4-20 PART OF KIT P/N 57K0273..... UOC:AVY,A11,A13,A14,A20,A24,A25,A26, A27,B17,B18,HVY,H11,H13,H14,H17,H18, H20,H21,H24,H25,H26,H27,H28,MMM	3
4	PAOZZ	5305000680508	80204	B1821BH025C075N	SCREW,CAP,HEXAGON H 1/4-20 X 3/4 PART OF KIT P/N 57K0273..... UOC:AVY,A11,A13,A14,A20,A24,A25,A26, A27,B17,B18,HVY,H11,H13,H14,H17,H18, H20,H21,H24,H25,H26,H27,H28,MMM	1
5	PAOZZ	5340011104036	19207	12298661	PLUG,VENT PART OF KIT P/N 57K0273... UOC:AVY,A11,A13,A14,A20,A24,A25,A26, A27,B17,B18,HVY,H11,H13,H14,H17,H18, H20,H21,H24,H25,H26,H27,H28,MMM	1

END OF FIGURE

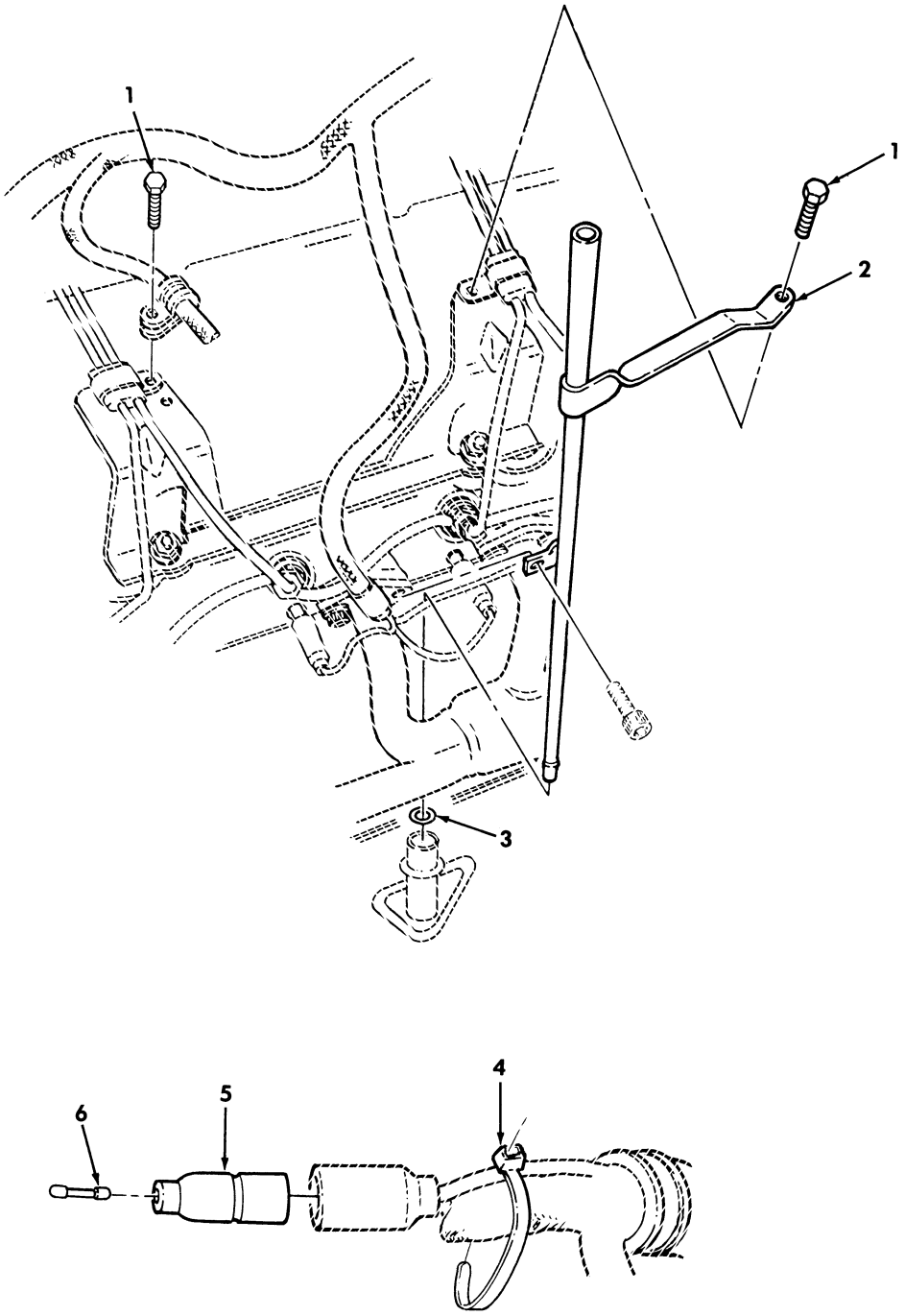

Figure 479. Dipstick and Dummy Connector Plug-400 AMP Alternator Kit.

(1) ITEM NO	(2) SMR CODE	(3) NSN	(4) CAGEC	(5) PART NUMBER	(6) DESCRIPTION AND USABLE ON CODES(UOC)	(7) QTY
					GROUP 3307 SPECIAL PURPOSE KITS	
					FIG. 479 DIPSTICK AND DUMMY CONNECTOR PLUG-400 AMP ALTERNATOR KIT	
1	PAOZZ	5305012155174	19207	12340515	SCREW,ASSEMBLED WAS PART OF KIT P/N 57K0273..... UOC:AVY,A11,A13,A14,A20,A24,A25,A26, A27,B17,B18,HVY,H11,H13,H14,H17,H18, H20,H21,H24,H25,H26,H27,H28,MMM	2
2	PAOZZ	2590014665447	34623	12446754	TUBE,DIPSTICK PART OF KIT P/N 57K0273..... UOC:AVY,A11,A13,A14,A20,A24,A25,A26, A27,B17,B18,HVY,H11,H13,H14,H17,H18, H20,H21,H24,H25,H26,H27,H28,MMM	1
3	PAOZZ	5331009359136	24617	274244	O-RING .355"I.D PART OF KIT P/N 57K0273..... UOC:AVY,A11,A13,A14,A20,A24,A25,A26, A27,B17,B18,HVY,H11,H13,H14,H17,H18, H20,H21,H24,H25,H26,H27,H28,MMM	1
4	PAOZZ	5975010345871	96906	MS3367-7-0	STRAP,TIEDOWN,ELECT PART OF KIT P/N 57K0273..... UOC:AVY,A11,A13,A14,A20,A24,A25,A26, A27,B17,B18,HVY,H11,H13,H14,H17,H18, H20,H21,H24,H25,H26,H27,H28,MMM	1
5	PAOZZ	5935008338561	19207	8338561	SHELL,ELECTRICAL CO PART OF KIT P/N 57K0273..... UOC:AVY,A11,A13,A14,A20,A24,A25,A26, A27,B17,B18,HVY,H11,H13,H14,H17,H18, H20,H21,H24,H25,H26,H27,H28,MMM	1
6	PAOZZ	5935002140904	19207	7982907	DUMMY CONNECTOR,PLU PART OF KIT P/N 57K0273..... UOC:AVY,A11,A13,A14,A20,A24,A25,A26, A27,B17,B18,HVY,H11,H13,H14,H17,H18, H20,H21,H24,H25,H26,H27,H28,MMM	1

END OF FIGURE

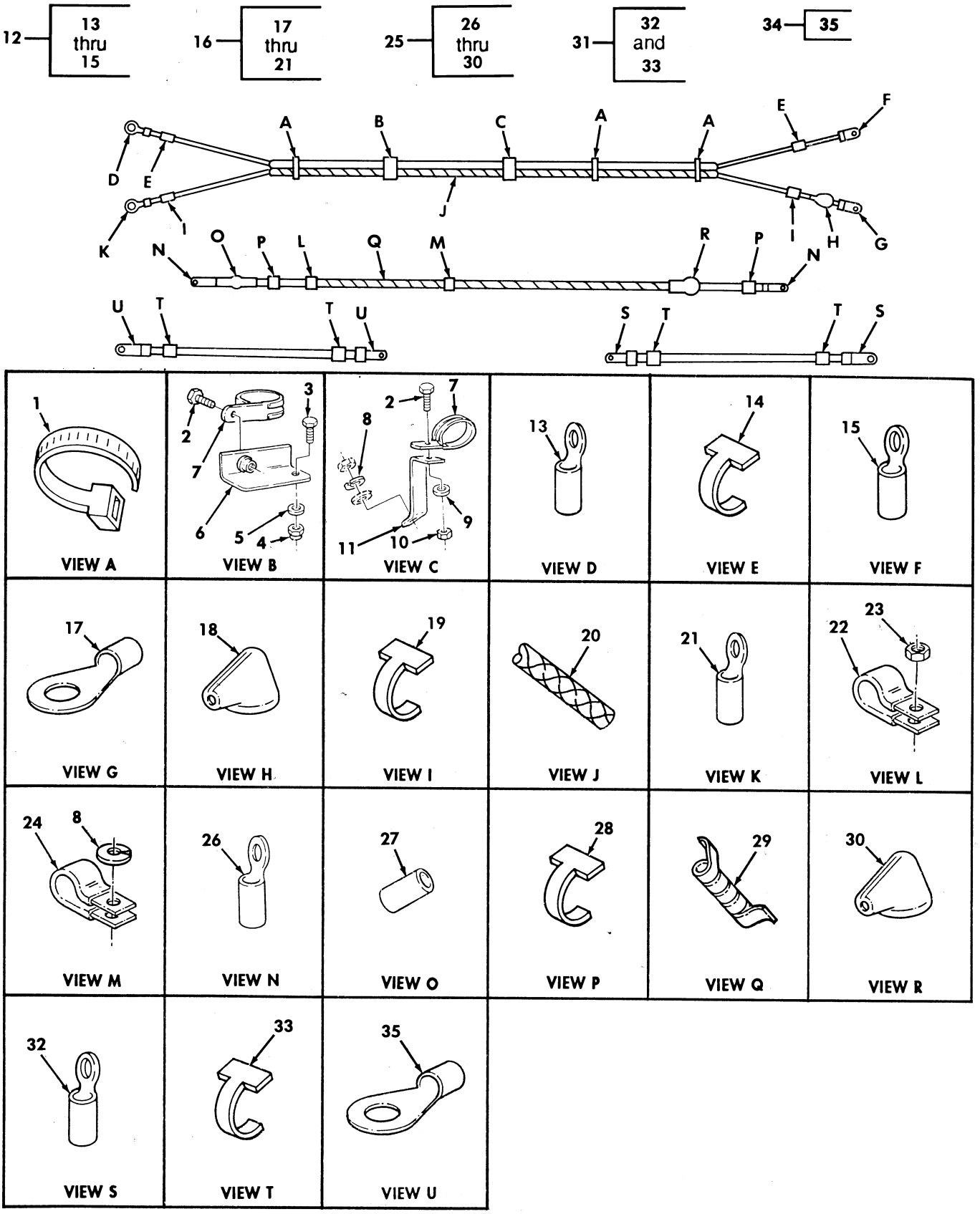

Figure 480. 400 AMP Alternator Wiring Harness Cable Assemblies.

(1) ITEM NO	(2) SMR CODE	(3) NSN	(4) CAGEC	(5) PART NUMBER	(6) DESCRIPTION AND USABLE ON CODES(UOC)	(7) QTY
					GROUP 3307 SPECIAL PURPOSE KITS	
					FIG. 480 400 AMP ALTERNATOR WIRING HARNESS CABLE ASSEMBLIES	
1	PAOZZ	5975010345871	96906	MS3367-7-0	STRAP,TIEDOWN,ELECT PART OF KIT P/N 57K0273..... UOC:AVY,A11,A13,A14,A20,A24,A25,A26, A27,B17,B18,HVY,H11,H13,H14,H17,H18, H20,H21,H24,H25,H26,H27,H28,MMM	3
2	PAOZZ	5305011432328	72582	454065	SCREW,CAP,HEXAGON H #10-32 X 3/4 PART OF KIT P/N 57K0273..... UOC:AVY,A11,A13,A14,A20,A24,A25,A26, A27,B17,B18,HVY,H11,H13,H14,H17,H18, H20,H21,H24,H25,H26,H27,H28,MMM	2
3	PAOZZ	5306002264825	80204	B1821BH031C075N	BOLT,MACHINE 1/4-20 X 3/4 PART OF KIT P/N 57K0273..... UOC:AVY,A11,A13,A14,A20,A24,A25,A26, A27,B17,B18,HVY,H11,H13,H14,H17,H18, H20,H21,H24,H25,H26,H27,H28,MMM	1
4	PAOZZ	5310008140673	96906	MS51943-33	NUT,SELF-LOCKING,HE 5/16-18 PART OF KIT P/N 57K0273..... UOC:AVY,A11,A13,A14,A20,A24,A25,A26, A27,B17,B18,HVY,H11,H13,H14,H17,H18, H20,H21,H24,H25,H26,H27,H28,MMM	1
5	PAOZZ	5310000814219	96906	MS27183-12	WASHER,FLAT 5/16 PART OF KIT P/N 57K0273..... UOC:AVY,A11,A13,A14,A20,A24,A25,A26, A27,B17,B18,HVY,H11,H13,H14,H17,H18, H20,H21,H24,H25,H26,H27,H28,MMM	1
6	PAOZA	5340014662468	19207	12460496	BRACKET,ANGLE PART OF KIT P/N 57K0273..... UOC:AVY,A11,A13,A14,A20,A24,A25,A26, A27,B17,B18,HVY,H11,H13,H14,H17,H18, H20,H21,H24,H25,H26,H27,H28,MMM	1
7	PAOZZ	5340007319611	96906	MS21334-34	CLAMP,LOOP PART OF KIT P/N 57K0273.. UOC:AVY,A11,A13,A14,A20,A24,A25,A26, A27,B17,B18,HVY,H11,H13,H14,H17,H18, H20,H21,H24,H25,H26,H27,H28,MMM	2
8	PAOZZ	5310012067306	7X677	11500207	WASHER,LOCK PART OF KIT P/N 57K0273. UOC:AVY,A11,A13,A14,A20,A24,A25,A26, A27,B17,B18,HVY,H11,H13,H14,H17,H18, H20,H21,H24,H25,H26,H27,H28,MMM	2
9	PAOZZ	5310000145850	96906	MS27183-42	WASHER,FLAT #10 PART OF KIT P/N 57K0273..... UOC:AVY,A11,A13,A14,A20,A24,A25,A26, A27,B17,B18,HVY,H11,H13,H14,H17,H18, H20,H21,H24,H25,H26,H27,H28,MMM	1
10	PAOZZ	5310002089255	96906	MS21044-C3	NUT,SELF-LOCKING,HE PART OF KIT P/N 57K0273..... UOC:AVY,A11,A13,A14,A20,A24,A25,A26, A27,B17,B18,HVY,H11,H13,H14,H17,H18, H20,H21,H24,H25,H26,H27,H28,MMM	1

(1) ITEM NO	(2) SMR CODE	(3) NSN	(4) CAGEC	(5) PART NUMBER	(6) DESCRIPTION AND USABLE ON CODES(UOC)	(7) QTY
11	PAOZA	5340014662620	19207	12460495	BRACKET,DOUBLE ANGL PART OF KIT P/N 57K0273..... UOC:AVY,A11,A13,A14,A20,A24,A25,A26, A27,B17,B18,HVY,H11,H13,H14,H17,H18, H20,H21,H24,H25,H26,H27,H28,MMM	1
12	PAOZZ	6150014707014	19207	12460498-4	CABLE ASSEMBLY,SPEC PART OF KIT P/N 57K0273..... UOC:AVY,A11,A13,A14,A20,A24,A25,A26, A27,B17,B18,HVY,H11,H13,H14,H17,H18, H20,H21,H24,H25,H26,H27,H28,MMM	1
13	PAOZZ	5940001155023	96906	MS20659-124	.TERMINAL,LUG PART OF KIT P/N 57K0273..... UOC:AVY,A11,A13,A14,A20,A24,A25,A26, A27,B17,B18,HVY,H11,H13,H14,H17,H18, H20,H21,H24,H25,H26,H27,H28,MMM	1
14	PAOZZ	9905009457637	81349	M43436/1-4	.BAND,MARKER PART OF KIT P/N 57K0273 UOC:AVY,A11,A13,A14,A20,A24,A25,A26, A27,B17,B18,HVY,H11,H13,H14,H17,H18, H20,H21,H24,H25,H26,H27,H28,MMM	2
15	PAOZA	5940001155012	96906	MS20659-157	.TERMINAL,LUG PART OF KIT P/N 57K0273..... UOC:AVY,A11,A13,A14,A20,A24,A25,A26, A27,B17,B18,HVY,H11,H13,H14,H17,H18, H20,H21,H24,H25,H26,H27,H28,MMM	1
16	MOOZZ		19207	12460498-3	CABLE ASSEMBLY PART OF KIT P/N 57K0273 MAKE FROM WIRE,P/N M13486/1-4,78,INCHES LONG..... A27,B17,B18,HVY,H11,H13,H14,H17,H18, A27,B17,B18,HVY,H11,H13,H14,H17,H18, H20,H21,H24,H25,H26,H27,H28,MMM	1
17	PAOZZ	5940001155006	96906	MS25036-133	.TERMINAL,LUG PART OF KIT P/N 57K0273..... UOC:AVY,A11,A13,A14,A20,A24,A25,A26, A27,B17,B18,HVY,H11,H13,H14,H17,H18, H20,H21,H24,H25,H26,H27,H28,MMM	1
18	PAOZZ	5975012089618	9Z043	12339710	.CABLE NIPPLE,ELECTR PART OF KIT P/N 57K0273..... UOC:AVY,A11,A13,A14,A20,A24,A25,A26, A27,B17,B18,HVY,H11,H13,H14,H17,H18, H20,H21,H24,H25,H26,H27,H28,MMM	1
19	PAOZZ	9905008933570	81349	M43436/1-3	.BAND,MARKER PART OF KIT P/N 57K0273 UOC:AVY,A11,A13,A14,A20,A24,A25,A26, A27,B17,B18,HVY,H11,H13,H14,H17,H18, H20,H21,H24,H25,H26,H27,H28,MMM	2
20	MOOZZ		9D117	SAEJ562	.LOOM,NONMETALLIC 3/4 PART OF KIT P/N 57K0273 MAKE FROM TUBING,P/N AE208-10,LENGTH AS REQUIRED..... UOC:AVY,A11,A13,A14,A20,A24,A25,A26, A27,B17,B18,HVY,H11,H13,H14,H17,H18, H20,H21,H24,H25,H26,H27,H28,MMM	1
21	PAOZZ	5940001155001	96906	MS20659-135	.TERMINAL,LUG PART OF KIT P/N 57K0273..... UOC:AVY,A11,A13,A14,A20,A24,A25,A26,	1

(1) ITEM NO	(2) SMR CODE	(3) NSN	(4) CAGEC	(5) PART NUMBER	(6) DESCRIPTION AND USABLE ON CODES(UOC)	(7) QTY
					A27,B17,B18,HVY,H11,H13,H14,H17,H18, H20,H21,H24,H25,H26,H27,H28,MMM	
22	PAOZZ	5340008091494	96906	MS21333-105	CLAMP,LOOP PART OF KIT P/N 57K0273.. UOC:AVY,A11,A13,A14,A20,A24,A25,A26, A27,B17,B18,HVY,H11,H13,H14,H17,H18, H20,H21,H24,H25,H26,H27,H28,MMM	1
23	PAOZZ	5310011520598	24617	271172	NUT,SELF-LOCKING,AS 1/4-20 PART OF KIT P/N 57K0273..... UOC:AVY,A11,A13,A14,A20,A24,A25,A26, A27,B17,B18,HVY,H11,H13,H14,H17,H18, H20,H21,H24,H25,H26,H27,H28,MMM	1
24	PAOZZ	5340000538994	96906	MS21333-126	CLAMP,LOOP PART OF KIT P/N 57K0273.. UOC:AVY,A11,A13,A14,A20,A24,A25,A26, A27,B17,B18,HVY,H11,H13,H14,H17,H18, H20,H21,H24,H25,H26,H27,H28,MMM	1
25	MOOZZ		19207	12339317	LEAD,ELECTRICAL PART OF KIT P/N 57K0273 MAKE FROM WIRE,P/N M13486/1-14, 58 INCHES LONG..... UOC:AVY,A11,A13,A14,A20,A24,A25,A26, A27,B17,B18,HVY,H11,H13,H14,H17,H18, H20,H21,H24,H25,H26,H27,H28,MMM	1
26	PAOZZ	5940007355520	56501	TG33	.TERMINAL,LUG PART OF KIT P/N 57K0273..... UOC:AVY,A11,A13,A14,A20,A24,A25,A26, A27,B17,B18,HVY,H11,H13,H14,H17,H18, H20,H21,H24,H25,H26,H27,H28,MMM	2
* 27	PAOZZ	5970011749449	19207	7056640	.INSULATOR PART OF KIT P/N 57K0273.. UOC:AVY,A11,A13,A14,A20,A24,A25,A26, A27,B17,B18,HVY,H11,H13,H14,H17,H18, H20,H21,H24,H25,H26,H27,H28,MMM	1
28	PAOZZ	9905008933570	81349	M43436/1-3	.BAND,MARKER PART OF KIT P/N 57K0273 UOC:AVY,A11,A13,A14,A20,A24,A25,A26, A27,B17,B18,HVY,H11,H13,H14,H17,H18, H20,H21,H24,H25,H26,H27,H28,MMM	2
29	MOOZZ		19207	12339317-1-AR	.WRAP,NYLON MAKE FROM WRAP,P/N 12339317-1,LENGTH TO SUIT PART OF KIT P/N 57K0273..... UOC:AVY,A11,A13,A14,A20,A24,A25,A26, A27,B17,B18,HVY,H11,H13,H14,H17,H18, H20,H21,H24,H25,H26,H27,H28,MMM	1
30	PAOZZ	5975012089618	9Z043	12339710	.CABLE NIPPLE,ELECTR PART OF KIT P/N 57K0273..... UOC:AVY,A11,A13,A14,A20,A24,A25,A26, A27,B17,B18,HVY,H11,H13,H14,H17,H18, H20,H21,H24,H25,H26,H27,H28,MMM	1
31	MOOZZ		19207	12460498-2	CABLE ASSEMBLY,SPEC PART OF KIT P/N 57K0273 MAKE FROM WIRE,P/N M13486/1-14,11 INCHES LONG..... UOC:AVY,A11,A13,A14,A20,A24,A25,A26, A27,B17,B18,HVY,H11,H13,H14,H17,H18, H20,H21,H24,H25,H26,H27,H28,MMM	1
32	PAOZZ	5940001152683	96906	MS20659-151	.TERMINAL,LUG PART OF KIT P/N 57K0273.....	2

(1) ITEM NO	(2) SMR CODE	(3) NSN	(4) CAGEC	(5) PART NUMBER	(6) DESCRIPTION AND USABLE ON CODES(UOC)	(7) QTY
					UOC:AVY,A11,A13,A14,A20,A24,A25,A26, A27,B17,B18,HVY,H11,H13,H14,H17,H18, H20,H21,H24,H25,H26,H27,H28,MMM	
33	PAOZZ	9905008933570	81349	M43436/1-3	.BAND,MARKER PART OF KIT P/N 57K0273	4
					UOC:AVY,A11,A13,A14,A20,A24,A25,A26, A27,B17,B18,HVY,H11,H13,H14,H17,H18, H20,H21,H24,H25,H26,H27,H28,MMM	
34	MOOZZ		19207	12460498-1	CABLE ASSEMBLY,SPEC PART OF KIT P/N 57K0273 MAKE FROM WIRE,P/N M13486/1-14 11 INCHES LONG.....	1
					UOC:AVY,A11,A13,A14,A20,A24,A25,A26, A27,B17,B18,HVY,H11,H13,H14,H17,H18, H20,H21,H24,H25,H26,H27,H28,MMM	
35	PAOZZ	5940001152684	96906	MS20659-118	.TERMINAL,LUG PART OF KIT P/N 57K0273.....	2
					UOC:AVY,A11,A13,A14,A20,A24,A25,A26, A27,B17,B18,HVY,H11,H13,H14,H17,H18, H20,H21,H24,H25,H26,H27,H28,MMM	

END OF FIGURE

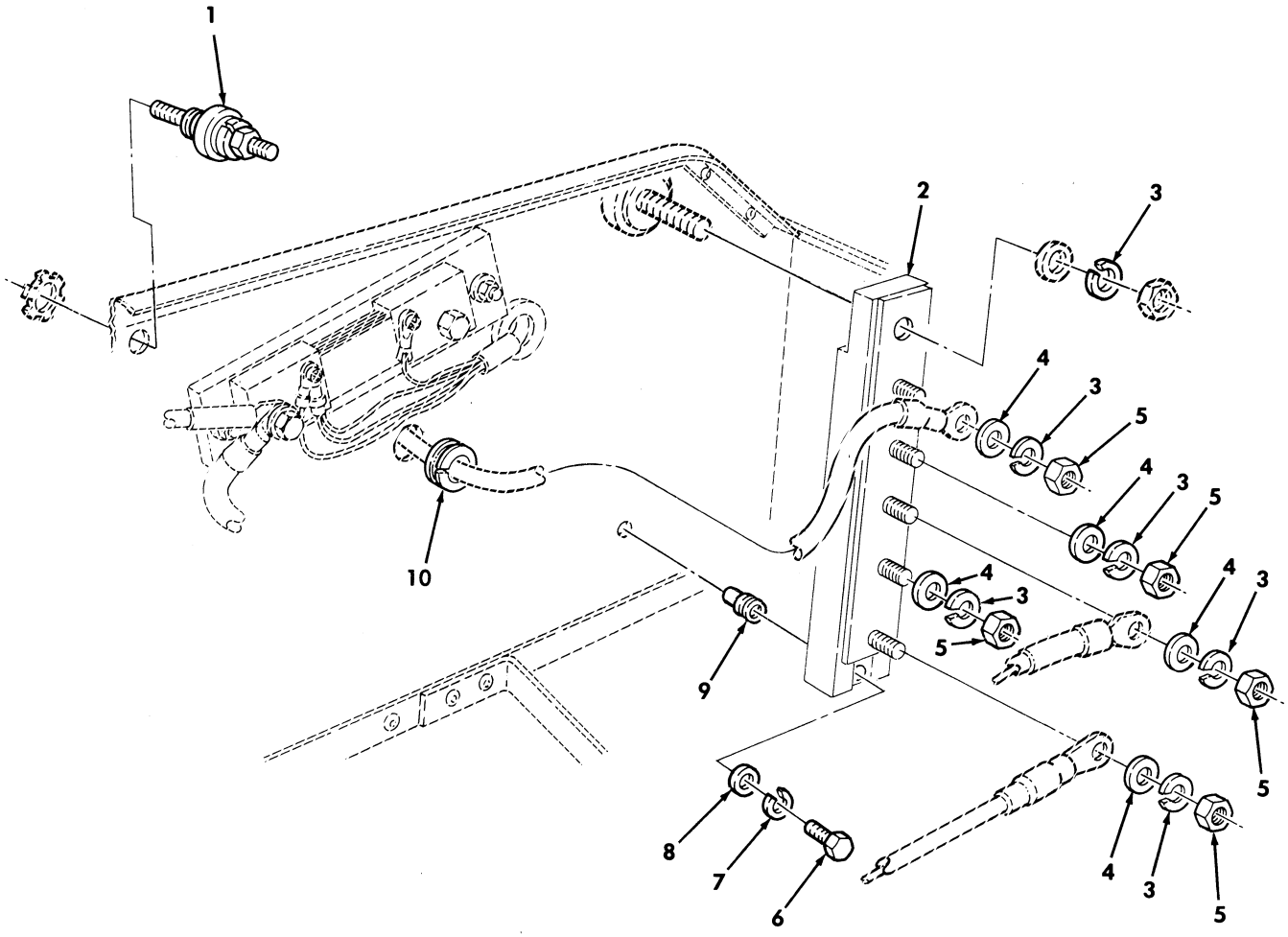

Figure 481. Buss Assembly-400 AMP Alternator Kit.

(1) ITEM NO	(2) SMR CODE	(3) NSN	(4) CAGEC	(5) PART NUMBER	(6) DESCRIPTION AND USABLE ON CODES(UOC)	(7) QTY
					GROUP 3307 SPECIAL PURPOSE KITS	
					FIG. 481 BUSS ASSEMBLY-400 AMP ALTERNATOR KIT	
1	PAOZZ	5940011803655	19207	12340594	TERMINAL ASSEMBLY PART OF KIT P/N 57K0273..... UOC:AVY,A11,A13,A14,A20,A24,A25,A26, A27,B17,B18,HVY,H11,H13,H14,H17,H18, H20,H21,H24,H25,H26,H27,H28,MMM	1
2	PAOZZ	6150014137946	19207	12460070	BUSS,CONDUCTOR PART OF KIT P/N 57K0273..... UOC:AVY,A11,A13,A14,A20,A24,A25,A26, A27,B17,B18,HVY,H11,H13,H14,H17,H18, H20,H21,H24,H25,H26,H27,H28,MMM	1
3	PAOZZ	5310000116121	29510	120384	WASHER,LOCK PART OF KIT P/N 57K0273 UOC:AVY,A11,A13,A14,A20,A24,A25,A26, A27,B17,B18,HVY,H11,H13,H14,H17,H18, H20,H21,H24,H25,H26,H27,H28,MMM	6
4	PAOZZ	5310000455218	96906	MS15795-918	WASHER,FLAT PART OF KIT P/N 57K0273. UOC:AVY,A11,A13,A14,A20,A24,A25,A26, A27,B17,B18,HVY,H11,H13,H14,H17,H18, H20,H21,H24,H25,H26,H27,H28,MMM	5
5	PAOZZ	5310000115774	24617	115774	NUT,PLAIN,HEXAGON PART OF KIT P/N 57K0273..... UOC:AVY,A11,A13,A14,A20,A24,A25,A26, A27,B17,B18,HVY,H11,H13,H14,H17,H18, H20,H21,H24,H25,H26,H27,H28,MMM	5
6	PAOZZ	5305000680508	80204	B1821BH025C075N	SCREW,CAP,HEXAGON H PART OF KIT P/N 57K0273..... UOC:AVY,A11,A13,A14,A20,A24,A25,A26, A27,B17,B18,HVY,H11,H13,H14,H17,H18, H20,H21,H24,H25,H26,H27,H28,MMM	1
7	PAOZZ	5310002092946	24617	120380	WASHER,LOCK 1/4 PART OF KIT P/N 57K0273..... UOC:AVY,A11,A13,A14,A20,A24,A25,A26, A27,B17,B18,HVY,H11,H13,H14,H17,H18, H20,H21,H24,H25,H26,H27,H28,MMM	1
8	PAOZZ	5310001870146	24617	120392	WASHER,FLAT PART OF KIT P/N 57K0273 UOC:AVY,A11,A13,A14,A20,A24,A25,A26, A27,B17,B18,HVY,H11,H13,H14,H17,H18, H20,H21,H24,H25,H26,H27,H28,MMM	1
9	PAOZZ	5310014113422	19207	12446871-2	NUT,PLAIN,BLIND RIV PART OF KIT P/N 57K0273..... UOC:AVY,A11,A13,A14,A20,A24,A25,A26, A27,B17,B18,HVY,H11,H13,H14,H17,H18, H20,H21,H24,H25,H26,H27,H28,MMM	1
10	PAOZZ	5325002766343	96906	MS35489-23	GROMMET,NONMETALLIC PART OF KIT P/N 57K0273..... UOC:AVY,A11,A13,A14,A20,A24,A25,A26, A27,B17,B18,HVY,H11,H13,H14,H17,H18, H20,H21,H24,H25,H26,H27,H28,MMM	1
KIT	PAOZZ	2920014651096	19207	57K0273	400 AMP ALTERNATOR.....	1

(1) ITEM NO	(2) SMR CODE	(3) NSN	(4) CAGEC	(5) PART NUMBER	(6) DESCRIPTION AND USABLE ON CODES(UOC)	(7) QTY
					UOC:AVY,A11,A13,A14,A20,A24,A25,A26, A27,B17,B18,HVY,H11,H13,H14,H17,H18, H20,H21,H24,H25,H26,H27,H28,MMM	
					BAND,MARKER	(2)
					BAND,MARKER	(2)
					BAND,MARKER	(2)
					BAND,MARKER	(4)
					BOLT,MACHINE	(1)
					BOLT,MACHINE	(1)
					BOLT,MACHINE	(1)
					BOLT,MACHINE	(1)
					BOLT,SHOULDER	(1)
					BRACKET ADJUSTMENT	(1)
					BRACKET ASSEMBLY	(1)
					BRACKET,CLAMP	(1)
					BRACKET,ENGINE,ACCE	(1)
					BRACKET,LOWER MOUNT	(1)
					BUSS,CONDUCTOR	(1)
					CABLE ASSEMBLY	(1)
					CABLE ASSEMBLY	(1)
					CABLE ASSEMBLY	(1)
					CABLE,NIPPLE,ELECTR	(2)
					CABLE NIPPLE,ELECTR	(1)
					CABLE NIPPLE,ELECTR	(1)
					CABLE,ASSEMBLY	(1)
					CLAMP,HOSE	(4)
					CLAMP,LOOP	(1)
					CLAMP,LOOP	(1)
					CLAMP,LOOP	(3)
					CLAMP,LOOP	(2)
					CLAMP,LOOP	(1)
					CLAMP,LOOP	(1)
					DUMMY CONNECTOR,PLU	(1)
					GENERATOR,ENGINE	(1)
					GROMMET,NONMETALLIC	(1)
					HOSE,NONMETALLIC	(1)
					HOSE,NONMETALLIC	(1)
					INSULATOR	(1)
					KEY,WOODRUFF	(1)
					LEAD,ELECTRICAL	(1)
					LOOM,NONMETALLIC	(1)
					NUT,BRASS	(5)
					NUT,PLAIN,HEXAGON	(1)
					NUT,PLAIN,HEXAGON	(1)
					NUT,PLAIN,ASSEMBLED	(1)
					NUT,PLAIN,BLIND RIV	(1)
					NUT,SELF-LOCKING,HE	(1)
					NUT,SELF-LOCKING,HE	(2)
					NUT,SELF-LOCKING,HE	(3)
					NUT,SELF-LOCKING,HE	(1)
					NUT,SELF-LOCKING,HE	(1)
					NUT,SELF-LOCKING,AS	(1)
					O-RING	(1)

(1) ITEM NO	(2) SMR CODE	(3) NSN	(4) CAGEC	(5) PART NUMBER	(6) DESCRIPTION AND USABLE ON CODES(UOC)	(7) QTY
					PLUG,VENT (1) 478-5	
					PULLEY (1) 476-10	
					SCREW,ASSEMBLED WAS(2) 479-1	
					SCREW,CAP,HEXAGON H(1) 476-1	
					SCREW,CAP,HEXAGON H(1) 476-17	
					SCREW,CAP,HEXAGON H(1) 477-8	
					SCREW,CAP,HEXAGON H(1) 478-4	
					SCREW,CAP,HEXAGON H(1) 481-6	
					SCREW,CAP,HEXAGON H(2) 480-2	
					SCREW,TAPPING (1) 477-1	
					SHAFT ASSEMBLY,FLEX(1) 478-1	
					SHELL,ELECTRICAL CO(1) 479-5	
					STRAP,TIEDOWN,ELECT(1) 479-4	
					STRAP,TIEDOWN,ELECT(3) 480-1	
					STRIP,ELECTRICAL GR(1) 476-25	
					STUD,SHOULDERED (1) 476-23	
					TERMINAL ASSEMBLY (1) 481-1	
					TERMINAL,LUG (1) 480-13	
					TERMINAL LUG (1) 480-15	
					TERMINAL,LUG (1) 480-17	
					TERMINAL,LUG (1) 480-21	
					TERMINAL,LUG (2) 480-26	
					TERMINAL,LUG (2) 480-32	
					TERMINAL,LUG (2) 480-35	
					TUBE,DIPSTICK (1) 479-2	
					V-BELT SET (1) 476-26	
					WASHER,FLAT (2) 476-3	
					WASHER,FLAT (2) 476-13	
					WASHER,FLAT (2) 476-22	
					WASHER,FLAT (5) 481-4	
					WASHER,FLAT (1) 481-8	
					WASHER,FLAT (1) 480-5	
					WASHER,FLAT (1) 480-9	
					WASHER,LOCK (2) 476-2	
					WASHER,LOCK (1) 476-12	
					WASHER,LOCK (3) 476-16	
					WASHER,LOCK (1) 476-18	
					WASHER,LOCK (6) 481-3	
					WASHER,LOCK (1) 481-7	
					WASHER,LOCK (2) 480-8	
					WRAP,NYLON (1) 480-29	

END OF FIGURE

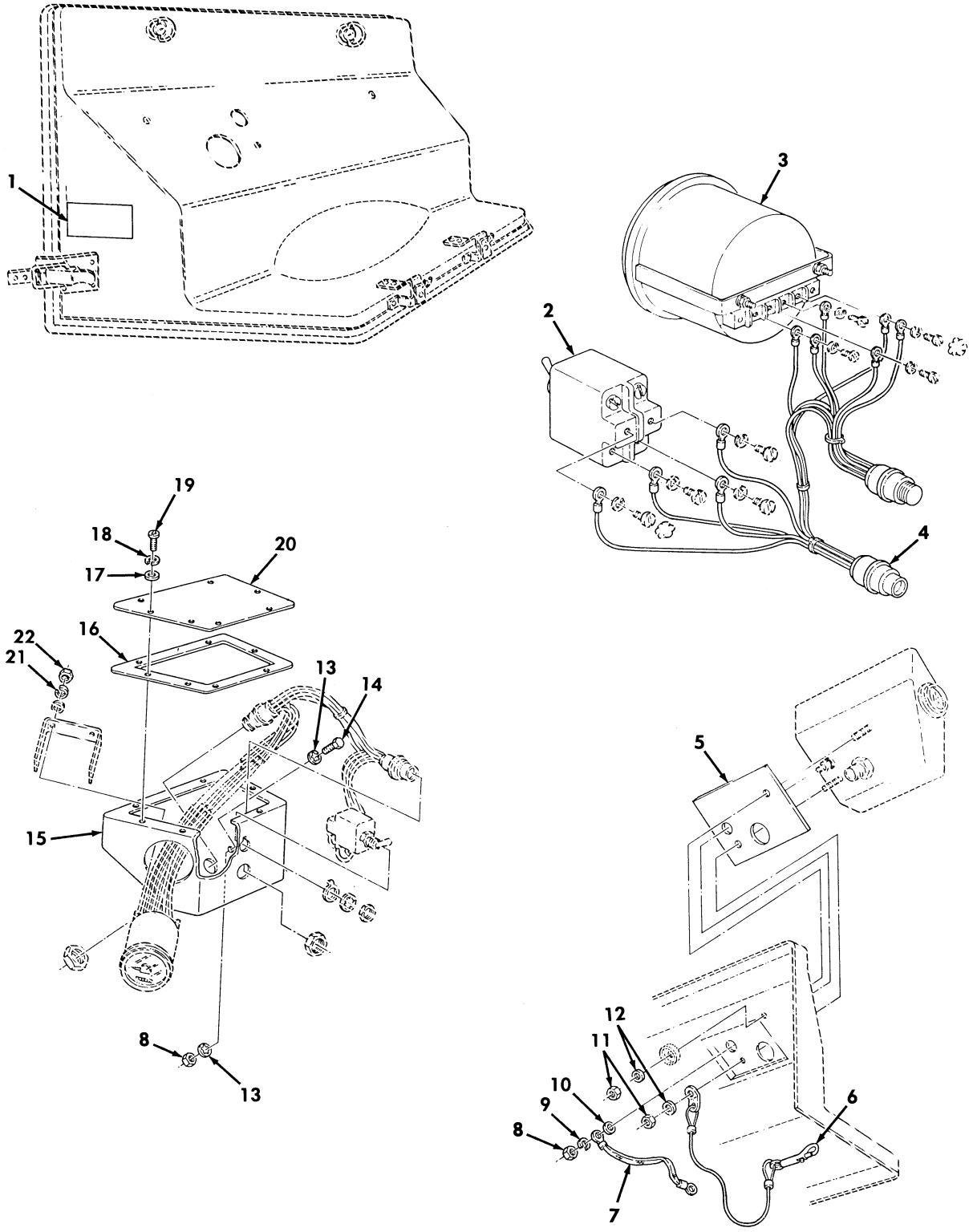

Figure 482. Tachometer Parts Kit.

(1) ITEM NO	(2) SMR CODE	(3) NSN	(4) CAGEC	(5) PART NUMBER	(6) DESCRIPTION AND USABLE ON CODES(UOC)	(7) QTY
					GROUP 3307 SPECIAL PURPOSE KITS	
					FIG. 482 TACHOMETER PARTS KIT	
1	PAOZA	7690014751197	19207	12469032	DECAL PART OF KIT P/N 57K3532..... UOC:AVY,A13,A14,BVY,HVY,H13,H14,H21, NNN	1
2	PAOZZ	5930008561654	96906	MS24659-23G	SWITCH,TOGGLE PART OF KIT P/N 57K3532..... UOC:AVY,A13,A14,BVY,HVY,H13,H14,H21, NNN	1
3	PAOZZ	6680014740384	06046	535K1-49383	TACHOMETER,ELECTRIC PART OF KIT P/N 57K3532..... UOC:AVY,A13,A14,BVY,HVY,H13,H14,H21, NNN	1
4	PAOZZ	6150014749676	19207	12469043	CABLE,ASSEMBLY,SPEC PART OF KIT P/N 57K3532..... UOC:AVY,A13,A14,BVY,HVY,H13,H14,H21, NNN	1
5	PAOZZ	5330014751671	19207	12469035	GASKET PART OF KIT P/N 57K3532..... UOC:AVY,A13,A14,BVY,HVY,H13,H14,H21, NNN	1
6	PAOZZ	4010013089168	57958	C5136341	WIRE ROPE ASSEMBLY, PART OF KIT P/N 57K3532..... UOC:AVY,A13,A14,BVY,HVY,H13,H14,H21, NNN	1
7	PAOZZ	5999014710710	19207	12469047	STRIP,ELECTRICAL GR PART OF KIT P/N 57K3532..... UOC:AVY,A13,A14,BVY,HVY,H13,H14,H21, NNN	1
8	PAOZZ	5310004776768	96906	MS35649-2384	NUT,PLAIN,HEXAGON PART OF KIT P/N 57K3532..... UOC:AVY,A13,A14,BVY,HVY,H13,H14,H21, NNN	2
9	PAOZZ	5310009847042	96906	MS35338-141	WASHER,LOCK PART OF KIT P/N 57K3532. UOC:AVY,A13,A14,BVY,HVY,H13,H14,H21, NNN	1
10	PAOZZ	5310008024701	96906	MS15795-813	WASHER,FLAT PART OF KIT P/N 57K3532. UOC:AVY,A13,A14,BVY,HVY,H13,H14,H21, NNN	1
11	PAOZZ	5310002089255	96906	MS21044-C3	NUT,SELF-LOCKING,HE PART OF KIT P/N 57K3532..... UOC:AVY,A13,A14,BVY,HVY,H13,H14,H21, NNN	2
12	PAOZZ	5310006191148	96906	MS15795-808	WASHER,FLAT PART OF KIT P/N 57K3532. UOC:AVY,A13,A14,BVY,HVY,H13,H14,H21, NNN	2
13	PAOZZ	5310005957237	61208	M2046S	WASHER,LOCK PART OF KIT P/N 57K3532. UOC:AVY,A13,A14,BVY,HVY,H13,H14,H21, NNN	2
14	PAOZZ	5305007215665	96906	MS35307-361	SCREW,CAP,HEXAGON H PART OF KIT P/N 57K3532..... UOC:AVY,A13,A14,BVY,HVY,H13,H14,H21,	1

(1) ITEM NO	(2) SMR CODE	(3) NSN	(4) CAGEC	(5) PART NUMBER	(6) DESCRIPTION AND USABLE ON CODES(UOC)	(7) QTY
					NNN	
15	PAOZZ	2540014753129	19207	12469034	HOUSING,TACHOMETER PART OF KIT P/N 57K3532..... UOC:AVY,A13,A14,BVY,HVY,H13,H14,H21, NNN	1
16	PAOZZ	5330013094340	57958	C5136338	GASKET PART OF KIT P/N 57K3532..... UOC:AVY,A13,A14,BVY,HVY,H13,H14,H21, NNN	1
17	PAOZZ	5310002255328	96906	MS15795-841	WASHER,FLAT PART OF KIT P/N 57K3532. UOC:AVY,A13,A14,BVY,HVY,H13,H14,H21, NNN	7
18	PAOZZ	5310009338119	81100	110401-8SS	WASHER,LOCK PART OF KIT P/N 57K3532. UOC:AVY,A13,A14,BVY,HVY,H13,H14,H21, NNN	7
19	PAOZZ	5305000546670	96906	MS51957-45	SCREW,MACHINE PART OF KIT P/N 57K3532..... UOC:AVY,A13,A14,BVY,HVY,H13,H14,H21, NNN	7
20	PAOZZ	5340013082168	57958	C5136336	COVER,ACCESS PART OF KIT P/N 57K3532 UOC:AVY,A13,A14,BVY,HVY,H13,H14,H21, NNN	1
* 21	PAOZZ	5310000453296	96906	MS35338-43	WASHER,LOCK..... UOC:AVY,A13,A14,BVY,HVY,H13,H14,H21, NNN	1
* 22	PAOZZ	5310009349751	96906	MS35650-302	NUT,PLAIN,HEXAGON..... UOC:AVY,A13,A14,BVY,HVY,H13,H14,H21, NNN	1

END OF FIGURE

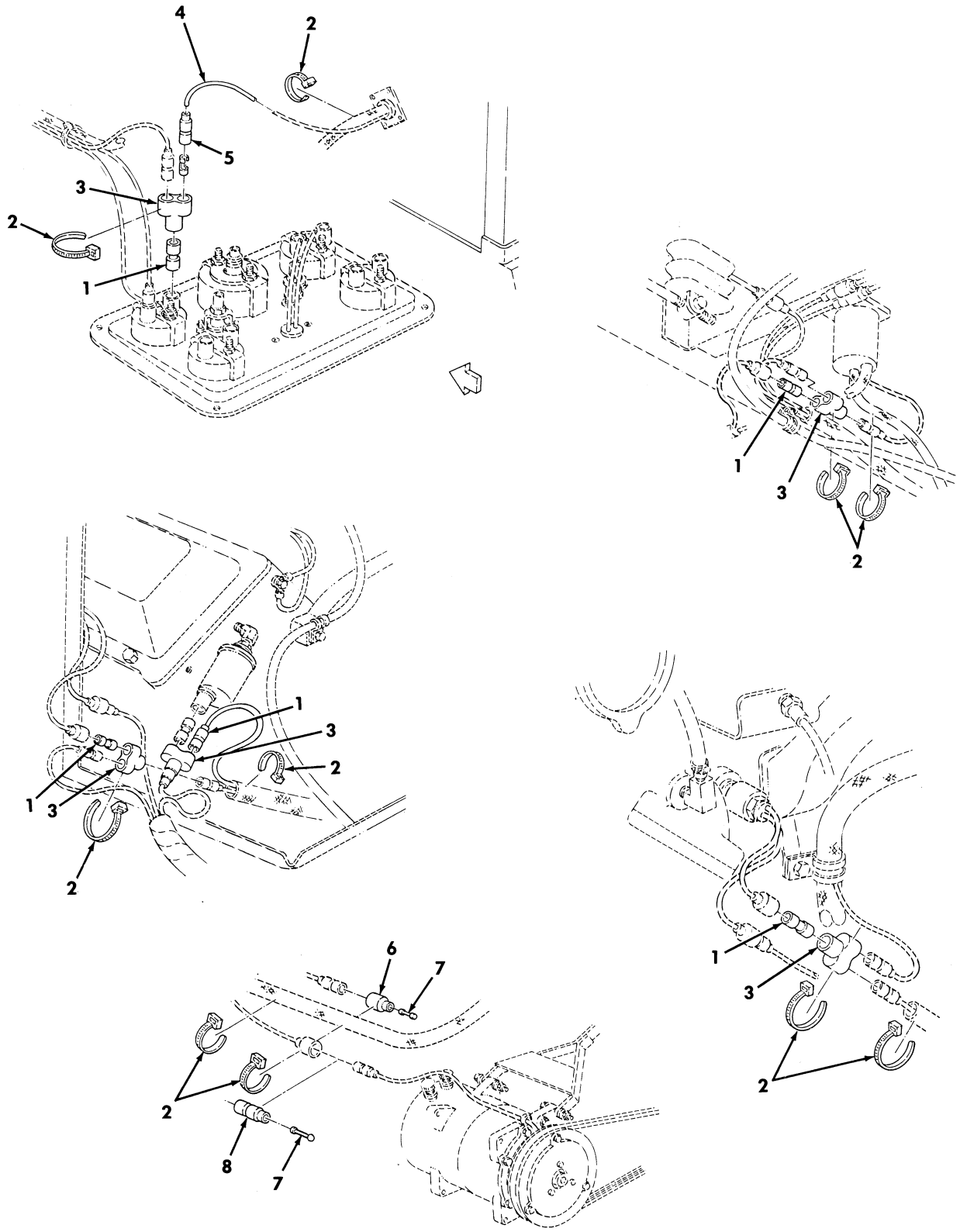

Figure 483. Tachometer Parts Kit.

(1) ITEM NO	(2) SMR CODE	(3) NSN	(4) CAGEC	(5) PART NUMBER	(6) DESCRIPTION AND USABLE ON CODES(UOC)	(7) QTY
					GROUP 3307 SPECIAL PURPOSE KITS	
					FIG. 483 TACHOMETER PARTS KIT	
1	PAOZZ	5935008074109	19207	8741492	ADAPTER,CONNECTOR PART OF KIT P/N 57K3532..... UOC:AVY,A13,A14,BVY,HVY,H13,H14,H21, NNN	5
2	PAOZZ	5975009856630	96906	MS3367-3-0	STRAP,TIEDOWN,ELECT PART OF KIT P/N 57K3532..... UOC:AVY,A13,A14,BVY,HVY,H13,H14,H21, NNN	12
3	PAOZZ	5935009006281	96906	MS27147-1	ADAPTER,CONNECTOR PART OF KIT P/N 57K3532..... UOC:AVY,A13,A14,BVY,HVY,H13,H14,H21, NNN	5
4	PAOZZ	6150014738663	19207	12469029	WIRING HARNESS,BRAN PART OF KIT P/N 57K3532..... UOC:AVY,A13,A14,BVY,HVY,H13,H14,H21, NNN	1
5	PAOZA	5935001152307	96906	MS27144-2	CONNECTOR,PLUG,ELEC PART OF KIT P/N 57K3532..... UOC:AVY,A13,A14,BVY,HVY,H13,H14,H21, NNN	1
6	PAOZZ	5935005729180	19207	8338566	SHELL,ELECTRICAL CO PART OF KIT P/N 57K3532..... UOC:AVY,A13,A14,BVY,HVY,H13,H14,H21, NNN	1
7	PAOZZ	5935002140904	19207	7982907	DUMMY CONNECTOR,PLU PART OF KIT P/N 57K3532..... UOC:AVY,A13,A14,BVY,HVY,H13,H14,H21, NNN	2
8	PAOZZ	5935008338561	19207	8338561	SHELL,ELECTRICAL CO PART OF KIT P/N 57K3532..... UOC:AVY,A13,A14,BVY,HVY,H13,H14,H21, NNN	1

END OF FIGURE

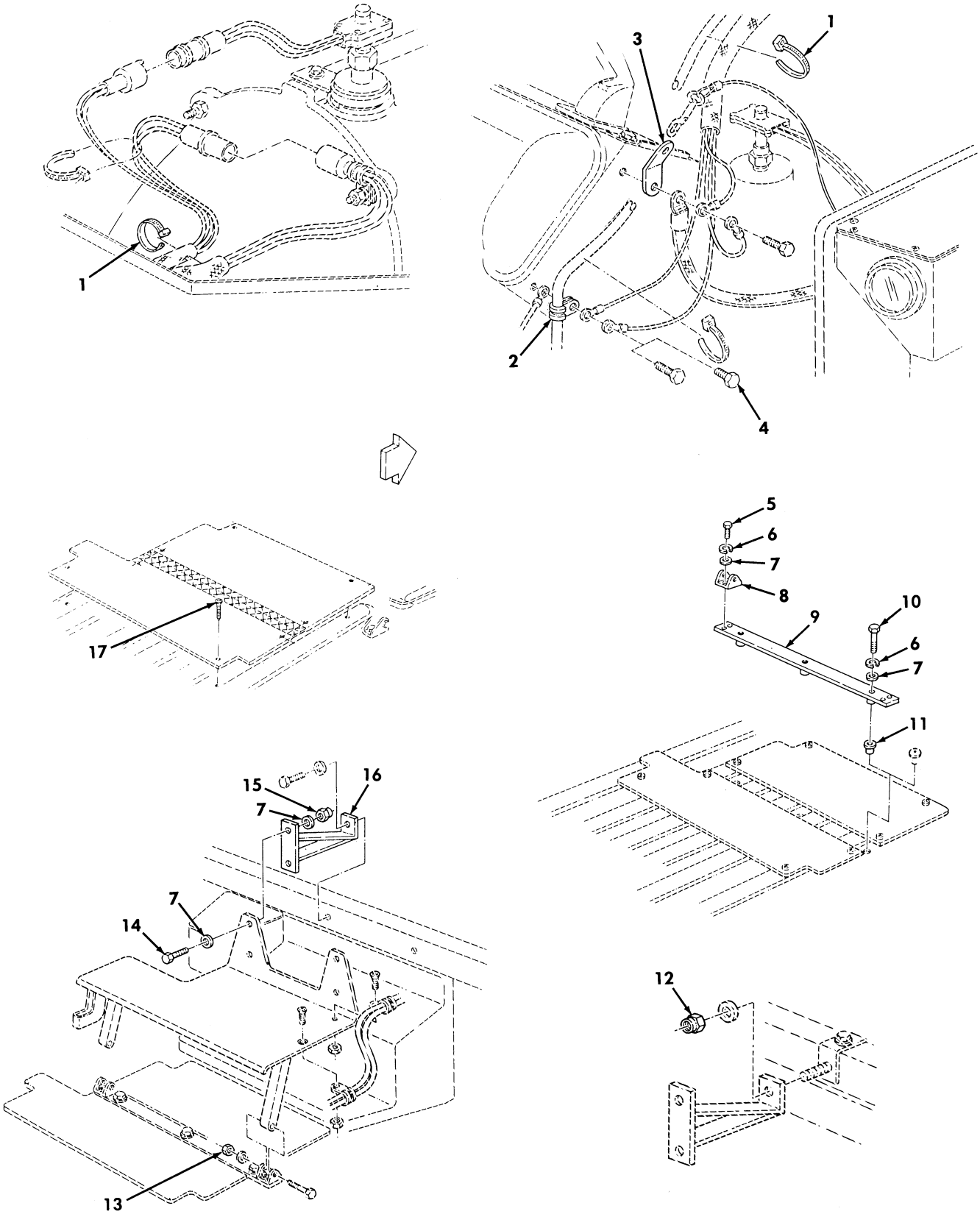

Figure 484. Tachometer Parts Kit.

(1) ITEM NO	(2) SMR CODE	(3) NSN	(4) CAGEC	(5) PART NUMBER	(6) DESCRIPTION AND USABLE ON CODES(UOC)	(7) QTY
					GROUP 3307 SPECIAL PURPOSE KITS	
					FIG. 484 TACHOMETER PARTS KIT	
1	PAOZZ	5975009856630	96906	MS3367-3-0	STRAP,TIEDOWN,ELECT PART OF KIT P/N 57K3532..... UOC:AVY,A13,A14,BVY,HVY,H13,H14,H21, NNN	4
2	PAOZZ	5340009891771	96906	MS21333-123	CLAMP,LOOP PART OF KIT P/N 57K3532.. UOC:AVY,A13,A14,BVY,HVY,H13,H14,H21, NNN	1
3	PAOZZ	5340013083851	57958	C5136342	BRACKET,ANGLE PART OF KIT P/N 57K3532..... UOC:AVY,A13,A14,BVY,HVY,H13,H14,H21, NNN	1
4	PAOZZ	5305013900547	80204	B18231B10020NF	SCREW,CAP,HEXAGON H PART OF KIT P/N 57K3532..... UOC:AVY,A13,A14,BVY,HVY,H13,H14,H21, NNN	1
5	PAOZZ	5305000680502	96906	MS90725-6	SCREW,CAP,HEXAGON H PART OF KIT P/N 57K3532..... UOC:AVY,A13,A14,BVY,HVY,H13,H14,H21, NNN	4
6	PAOZZ	5310005501130	96906	MS35333-40	WASHER,LOCK PART OF KIT P/N 57K3532. UOC:AVY,A13,A14,BVY,HVY,H13,H14,H21, NNN	7
7	PAOZZ	5310011023270	24617	2436161	WASHER,FLAT PART OF KIT P/N 57K3532. UOC:AVY,A13,A14,BVY,HVY,H13,H14,H21, NNN	15
8	PAOZZ	5340014743279	19207	12460543	BRACKET,DOUBLE ANGL PART OF KIT P/N 57K3532..... UOC:AVY,A13,A14,BVY,HVY,H13,H14,H21, NNN	2
9	PAOZZ	5340014740954	19207	12460544	PLATE,MOUNTING PART OF KIT P/N 57K3532..... UOC:AVY,A13,A14,BVY,HVY,H13,H14,H21, NNN	1
10	PAOZZ	5305000712510	80204	B1821BH025C175N	SCREW,CAP,HEXAGON H PART OF KIT P/N 57K3532..... UOC:AVY,A13,A14,BVY,HVY,H13,H14,H21, NNN	3
11	PAOZZ	5310014113422	78276	ALS4-420-165	NUT,PLAIN,BLIND RIV PART OF KIT P/N 57K3532..... UOC:AVY,A13,A14,BVY,HVY,H13,H14,H21, NNN	3
12	PAOZZ	5310009359022	96906	MS51943-32	NUT,SELF-LOCKING,HE PART OF KIT P/N 57K3532..... UOC:AVY,A13,A14,BVY,HVY,H13,H14,H21, NNN	2
13	PAOZZ	5310009359021	96906	MS51943-35	NUT,SELF-LOCKING,HE PART OF KIT P/N 57K3532..... UOC:AVY,A13,A14,BVY,HVY,H13,H14,H21, NNN	2

(1) ITEM NO	(2) SMR CODE	(3) NSN	(4) CAGEC	(5) PART NUMBER	(6) DESCRIPTION AND USABLE ON CODES(UOC)	(7) QTY
14	PAOZZ	5305002253843	80204	B1821BH025C100N	SCREW,CAP,HEXAGON H PART OF KIT P/N 57K3532..... UOC:AVY,A13,A14,BVY,HVY,H13,H14,H21, NNN	4
15	PAOZZ	5310000614650	96906	MS51943-31	NUT,SELF-LOCKING,HE PART OF KIT P/N 57K3532..... UOC:AVY,A13,A14,BVY,HVY,H13,H14,H21, NNN	4
16	PAOZZ	5340014330936	19207	12460542-2	BRACKET,MOUNTING PART OF KIT P/N 57K3532..... UOC:AVY,A13,A14,BVY,HVY,H13,H14,H21, NNN	2
17	PAOZZ	5305012707225	19207	12341822	SCREW,TAPPING THREA PART OF KIT P/N 57K3532..... UOC:AVY,A13,A14,BVY,HVY,H13,H14,H21, NNN	8
KIT	PAOZZ	5999014743213	19207	57K3532	PARTS KIT,TACHOMETE..... UOC:AVY,A13,A14,BVY,HVY,H13,H14,H21, NNN	1
					ADAPTER,CONNECTOR (5) 483-1	
					ADAPTER,CONNECTOR (5) 483-3	
					BRACKET,MOUNTING (2) 484-16	
					BRACKET,DOUBLE ANGL(2) 484-8	
					BRACKET,ANGLE (1) 484-3	
					CABLE,ASSEMBLY,SPEC(1) 482-4	
					CLAMP,LOOP (1) 484-2	
					CONNECTOR,PLUG,ELEC(1) 483-5	
					COVER,ACCESS (1) 482-20	
					DECAL (1) 482-1	
					DUMMY CONNECTOR,PLU(2) 483-7	
					GASKET (1) 482-5	
					GASKET (1) 482-16	
					HOUSING,TACHOMETER (1) 482-15	
					NUT,PLAIN,BLIND RIV(3) 484-11	
					NUT,PLAIN,HEXAGON (2) 482-8	
					NUT,SELF-LOCKING,HE(2) 482-11	
					NUT,SELF-LOCKING,HE(4) 484-15	
					NUT,SELF-LOCKING,HE(2) 484-12	
					NUT,SELF-LOCKING,HE(2) 484-13	
					PLATE,MOUNTING (1) 484-9	
					SCREW,CAP,HEXAGON H(1) 482-14	
					SCREW,CAP,HEXAGON H(4) 484-5	
					SCREW,CAP,HEXAGON H(4) 484-14	
					SCREW,CAP,HEXAGON H(3) 484-10	
					SCREW,CAP,HEXAGON H(1) 484-4	
					SCREW,MACHINE (7) 482-19	
					SCREW,TAPPING THREA(8) 484-17	
					SHELL,ELECTRICAL CO(1) 483-8	
					SHELL,ELECTRICAL CO(1) 483-6	
					STRAP,TIEDOWN,ELECT(12) 483-2	
					STRAP,TIEDOWN,ELECT(4) 484-1	
					STRIP,ELECTRICAL GR(1) 482-7	
					SWITCH,TOGGLE (1) 482-2	

(1) ITEM NO	(2) SMR CODE	(3) NSN	(4) CAGEC	(5) PART NUMBER	(6) DESCRIPTION AND USABLE ON CODES(UOC)	(7) QTY
					TACHOMETER,ELECTRIC(1) 482-3	
					WASHER,FLAT (2) 482-12	
					WASHER,FLAT (1) 482-10	
					WASHER,FLAT (7) 482-17	
					WASHER,FLAT (15) 484-7	
					WASHER,LOCK (2) 482-13	
					WASHER,LOCK (7) 482-18	
					WASHER,LOCK (1) 482-9	
					WASHER,LOCK (7) 484-6	
					WIRE ROPE ASSEMBLY,(1) 482-6	
					WIRING HARNESS,BRAN(1) 483-4	

END OF FIGURE

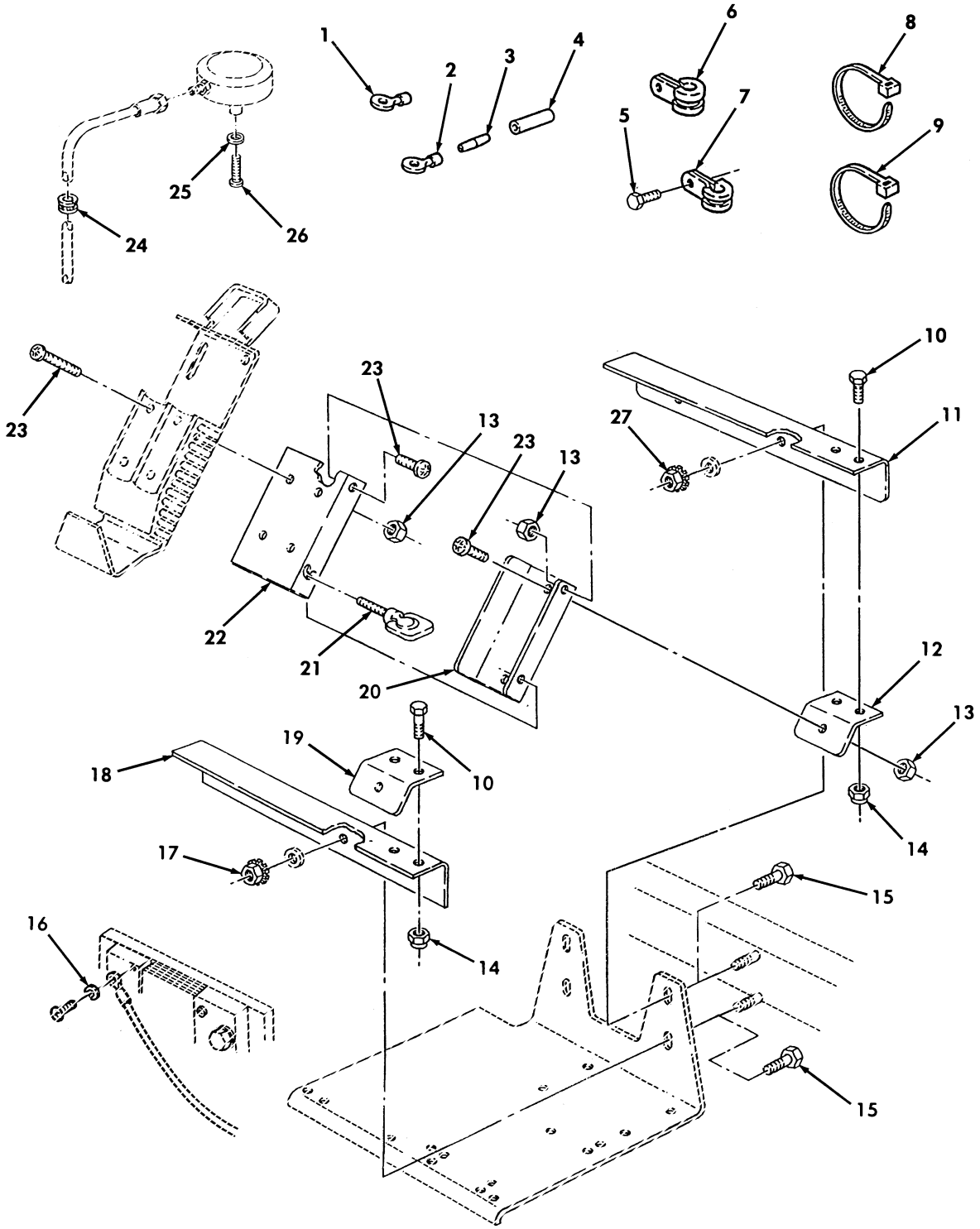

Figure 485. Precision Lightweight Global Positioning System Receiver (PLGR).

(1) ITEM NO	(2) SMR CODE	(3) NSN	(4) CAGEC	(5) PART NUMBER	(6) DESCRIPTION AND USABLE ON CODES(UOC)	(7) QTY
					GROUP 3307 SPECIAL PURPOSE KITS	
					FIG. 485 PRECISION LIGHTWEIGHT GLOBAL POSTIONING SYSTEM RECEIVER (PLGR)	
1	PAOZZ	5940009834067	16528	7728777	TERMINAL,LUG PART OF KIT P/N 57K3233 UOC:A11,B17,B18,C17,H11,H17,H18,MMM	1
2	PAOZZ	5940010354212	19207	7728780	TERMINAL,LUG PART OF KIT P/N 57K3233 UOC:A11,B17,B18,C17,H11,H17,H18,MMM	1
3	PAOZZ	5940001139420	80205	NAS1387-4	SPLICE,CONDUCTOR PART OF KIT P/N 57K3233..... UOC:A11,B17,B18,C17,H11,H17,H18,MMM	2
4	PAOZZ	5970010489378	81349	M23053/4-103-0	INSULATION SLEEVING PART OF KIT P/N 57K3233..... UOC:A11,B17,B18,C17,H11,H17,H18,MMM	1
5	PAOZZ	5305004324201	96906	MS51861-45	SCREW,TAPPING PART OF KIT P/N 57K3233..... UOC:A11,B17,B18,C17,H11,H17,H18,MMM	1
6	PAOZZ	5340009050790	96906	MS21333-65	CLAMP,LOOP PART OF KIT P/N 57K3233.. UOC:A11,B17,B18,C17,H11,H17,H18,MMM	1
7	PAOZZ	5340000881255	96906	MS21333-96	CLAMP,LOOP PART OF KIT P/N 57K3233.. UOC:A11,B17,B18,C17,H11,H17,H18,MMM	1
8	PAOZZ	5975000742072	96906	MS3367-1-9	STRAP,TIEDOWN,ELECT PART OF KIT P/N 57K3233..... UOC:A11,B17,B18,C17,H11,H17,H18,MMM	2
* 9	PAOZZ	5975010345871	96906	MS3367-7-0	STRAP,TIEDOWN,ELECT PART OF KIT P/N 57K3233..... UOC:A11,B17,B18,C17,H11,H17,H18,MMM	1
10	PAOZZ	5305000680508	80204	B1821BH025C075N	SCREW,CAP,HEXAGON H PART OF KIT P/N 57K3233..... UOC:A11,B17,B18,C17,H11,H17,H18,MMM	4
11	PAOZA	5340014662451	19207	12460221	BRACKET,ANGLE PART OF KIT P/N 57K3233..... UOC:A11,B17,B18,C17,H11,H17,H18,MMM	1
12	PAOZA	5340014711040	19207	12460220-1	BRACKET,ANGLE PART OF KIT P/N 57K3233..... UOC:A11,B17,B18,C17,H11,H17,H18,MMM	1
13	PAOZZ	5310001249265	72582	271169	NUT,PLAIN,ASSEMBLED #10-32 PART OF KIT P/N 57K3233..... UOC:A11,B17,B18,C17,H11,H17,H18,MMM	8
14	PAOZZ	5310000614650	96906	MS51943-31	NUT,SELF-LOCKING,HE PART OF KIT P/N 57K3233..... UOC:A11,B17,B18,C17,H11,H17,H18,MMM	4
15	PAOZZ	5305002678953	80204	B1821BH025F063N	SCREW,CAP,HEXAGON H PART OF KIT P/N 57K3233..... UOC:A11,B17,B18,C17,H11,H17,H18,MMM	2
16	PAOZZ	5310000453296	96906	MS35338-43	WASHER,LOCK PART OF KIT P/N 57K3233. UOC:A11,B17,B18,C17,H11,H17,H18,MMM	1
17	PAOZZ	5310009359022	96906	MS51943-32	NUT,SELF-LOCKING,HE PART OF KIT P/N 57K3233..... UOC:A11,B17,B18,C17,H11,H17,H18,MMM	2
18	PAOZA	5340014662438	19207	12460222	BRACKET,ANGLE PART OF KIT P/N	1

(1) ITEM NO	(2) SMR CODE	(3) NSN	(4) CAGEC	(5) PART NUMBER	(6) DESCRIPTION AND USABLE ON CODES(UOC)	(7) QTY
					57K3233.....	
					UOC:A11,B17,B18,C17,H11,H17,H18,MMM	
19	PAOZA	5340014661985	19207	12460220-2	BRACKET,ANGLE PART OF KIT P/N	1
					57K3233.....	
					UOC:A11,B17,B18,C17,H11,H17,H18,MMM	
20	PAOZA	5340014662606	19207	12460219	BRACKET,DOUBLE ANGL PART OF KIT P/N	1
					57K3233.....	
					UOC:A11,B17,B18,C17,H11,H17,H18,MMM	
21	PAOZZ	5305014717623	19207	12460223	THUMBSCREW PART OF KIT P/N 57K3233..	1
					UOC:A11,B17,B18,C17,H11,H17,H18,MMM	
22	PAOZA	5340014662611	19207	12460218	BRACKET,DOUBLE ANGL PART OF KIT P/N	1
					57K3233.....	
					UOC:A11,B17,B18,C17,H11,H17,H18,MMM	
23	PAOZZ	5305014077713	24617	160052	SCREW,MACHINE PART OF KIT P/N	8
					57K3233.....	
					UOC:A11,B17,B18,C17,H11,H17,H18,MMM	
24	PAOZZ	5325012927558	96906	MS35489-143	GROMMET,NONMETALLIC PART OF KIT P/N	1
					57K3233.....	
					UOC:A11,B17,B18,C17,H11,H17,H18,MMM	
25	PAOZZ	5310013611163	24617	9417373	WASHER,FLAT PART OF KIT P/N 57K3233.	1
					UOC:A11,B17,B18,C17,H11,H17,H18,MMM	
26	PAOZZ	5305009906444	96906	MS35207-261	SCREW,MACHINE PART OF KIT P/N	1
					57K3233.....	
					UOC:A11,B17,B18,C17,H11,H17,H18,MMM	
27	PAOZZ	5310013335245	24617	271175	NUT,SELF-LOCKING,HE PART OF KIT P/N	2
					57K3233.....	
					UOC:A11,B17,B18,C17,H11,H17,H18,MMM	
KIT	PAOZZ	2590014204179	19207	57K3233	PARTS KIT,BRACKET,V.....	1
					UOC:A11,B17,B18,C17,H11,H17,H18,MMM	
					BRACKET,ANGLE (1) 485-11	
					BRACKET,ANGLE (1) 485-12	
					BRACKET,ANGLE (1) 485-18	
					BRACKET,ANGLE (1) 485-19	
					BRACKET,DOUBLE ANGL(1) 485-20	
					BRACKET,DOUBLE ANGL(1) 485-22	
					CLAMP,LOOP (1) 485-6	
					CLAMP,LOOP (1) 485-7	
					GROMMET,NONMETALLIC(1) 485-24	
					INSULATION SLEEVING(1) 485-4	
					NUT,PLAIN,ASSEMBLED(8) 485-13	
					NUT,SELF-LOCKING,HE(4) 485-14	
					NUT,SELF-LOCKING,HE(2) 485-17	
					NUT,SELF-LOCKING,HE(2) 485-27	
					SCREW,CAP,HEXAGON H(4) 485-10	
					SCREW,CAP,HEXAGON H(2) 485-15	
					SCREW,MACHINE (8) 485-23	
					SCREW,MACHINE (1) 485-26	
					SCREW,TAPPING (1) 485-5	
					SPLICE,CONDUCTOR (2) 485-3	
					STRAP,TIEDOWN,ELECT(2) 485-8	
					STRAP,TIEDOWN,ELECT(1) 485-9	
					TERMINAL,LUG (1) 485-1	
					TERMINAL,LUG (1) 485-2	

(1) ITEM NO	(2) SMR CODE	(3) NSN	(4) CAGEC	(5) PART NUMBER	(6) DESCRIPTION AND USABLE ON CODES(UOC)	(7) QTY
					THUMBSCREW (1) 485-21	
					WASHER,FLAT (1) 485-25	
					WASHER,LOCK (1) 485-16	

END OF FIGURE

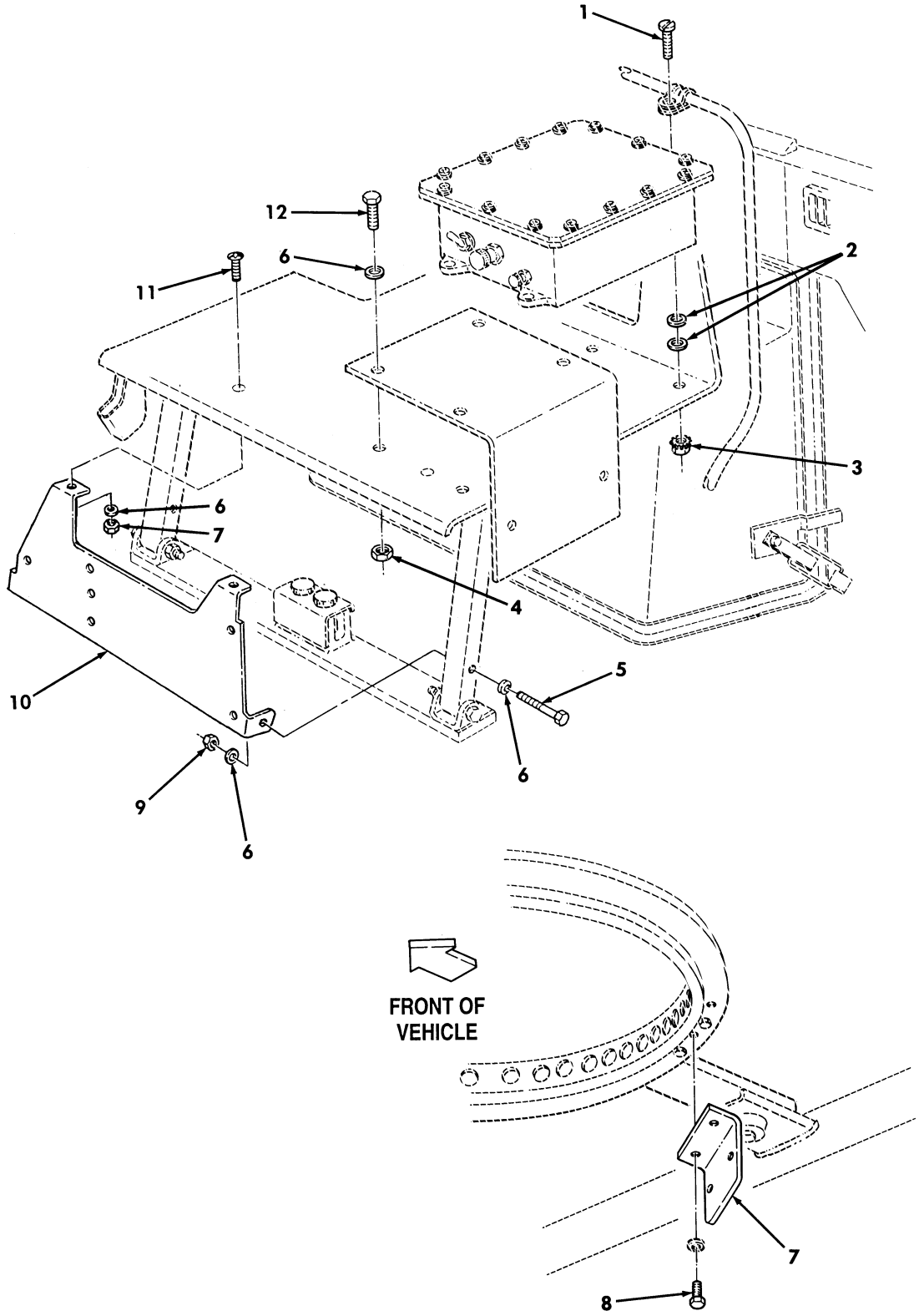

Figure 486. Kit, Intercom Bracket.

(1) ITEM NO	(2) SMR CODE	(3) NSN	(4) CAGEC	(5) PART NUMBER	(6) DESCRIPTION AND USABLE ON CODES(UOC)	(7) QTY
					GROUP 3307 SPECIAL PURPOSE KITS	
					FIG. 486 KIT,INTERCOM BRACKET	
1	PAOZZ	5305014672711	24617	160069	SCREW,MACHINE #10-32X1 PART OF KIT P/N 57K3488..... UOC:B17,B18,C17,H17,H18	4
2	PAOZZ	5310012175205	24617	9417714	WASHER,FLAT #10FLAT PART OF KIT P/N 57K3488..... UOC:B17,B18,C17,H17,H18	8
3	PAOZZ	5310002514503	24617	9411893	NUT,LOCK #10-32 PART OF KIT P/N 57K3488..... UOC:B17,B18,C17,H17,H18	4
4	PAOZZ	5310014326727	24617	9419471	NUT,SELF-LOCKING,HE 1/4-20 PART OF KIT P/N 57K3488..... UOC:B17,B18,C17,H17,H18	2
5	PAOZZ	5305000712237	96906	MS90725-14	SCREW,CAP,HEXAGON H 1/4-20X2.00 PART OF KIT P/N 57K3488..... UOC:B17,B18,C17,H17,H18	2
6	PAOZZ	5310011023270	24617	2436161	WASHER,FLAT 1/4 PART OF KIT P/N 57K3488..... UOC:B17,B18,C17,H17,H18	8
7	PAOZZ	5340014674153	80063	A3157855	BRACKET,ANGLE #10-32X1 PART OF KIT P/N 57K3488..... UOC:B17,B18,C17,H17,H18	1
8	PAOZZ	5305008213869	80204	B1821BH038C175N	SCREW,CAP,HEXAGON H 3/8-16 X 1.75 PART OF KIT P/N 57K3488..... UOC:B17,B18,C17,H17,H18	2
9	PAOZZ	5310000614650	96906	MS51943-31	NUT,SELF-LOCKING,HE 1/4-20 PART OF KIT P/N 57K3488..... UOC:B17,B18,C17,H17,H18	4
10	PAOZZ	5340012708489	19207	12340879	BRACKET,MOUNTING PART OF KIT P/N 57K3488..... UOC:B17,B18,C17,H17,H18	1
11	PAOZZ	5305007195021	96906	MS51959-81	SCREW,MACHINE 1/4-20X.75 PART OF KIT P/N 57K3488..... UOC:B17,B18,C17,H17,H18	2
12	PAOZZ	5305002253843	80204	B1821BH025C100N	SCREW,CAP,HEXAGON H 1/4-20X1.00 PART OF KIT P/N 57K3488..... UOC:B17,B18,C17,H17,H18	2
KIT	PAOZZ	2590014293008	19207	57K3488	PARTS KIT,BRACKET,V..... UOC:B17,B18,C17,H17,H18	1
					BRACKET,ANGLE (1) 486-7	
					BRACKET,MOUNTING (1) 486-10	
					NUT,LOCK (4) 486-3	
					NUT,SELF-LOCKING,HE(2) 486-4	
					NUT,SELF-LOCKING,HE(4) 486-9	
					SCREW,CAP,HEXAGON H(2) 486-5	
					SCREW,CAP,HEXAGON H(2) 486-8	
					SCREW,CAP,HEXAGON H(2) 486-12	
					SCREW,MACHINE (4) 486-1	
					SCREW,MACHINE (2) 486-11	
					WASHER,FLAT (8) 486-2	

(1) ITEM NO	(2) SMR CODE	(3) NSN	(4) CAGEC	(5) PART NUMBER	(6) DESCRIPTION AND USABLE ON CODES(UOC)	(7) QTY
					WASHER,FLAT (8) 486-6	

END OF FIGURE

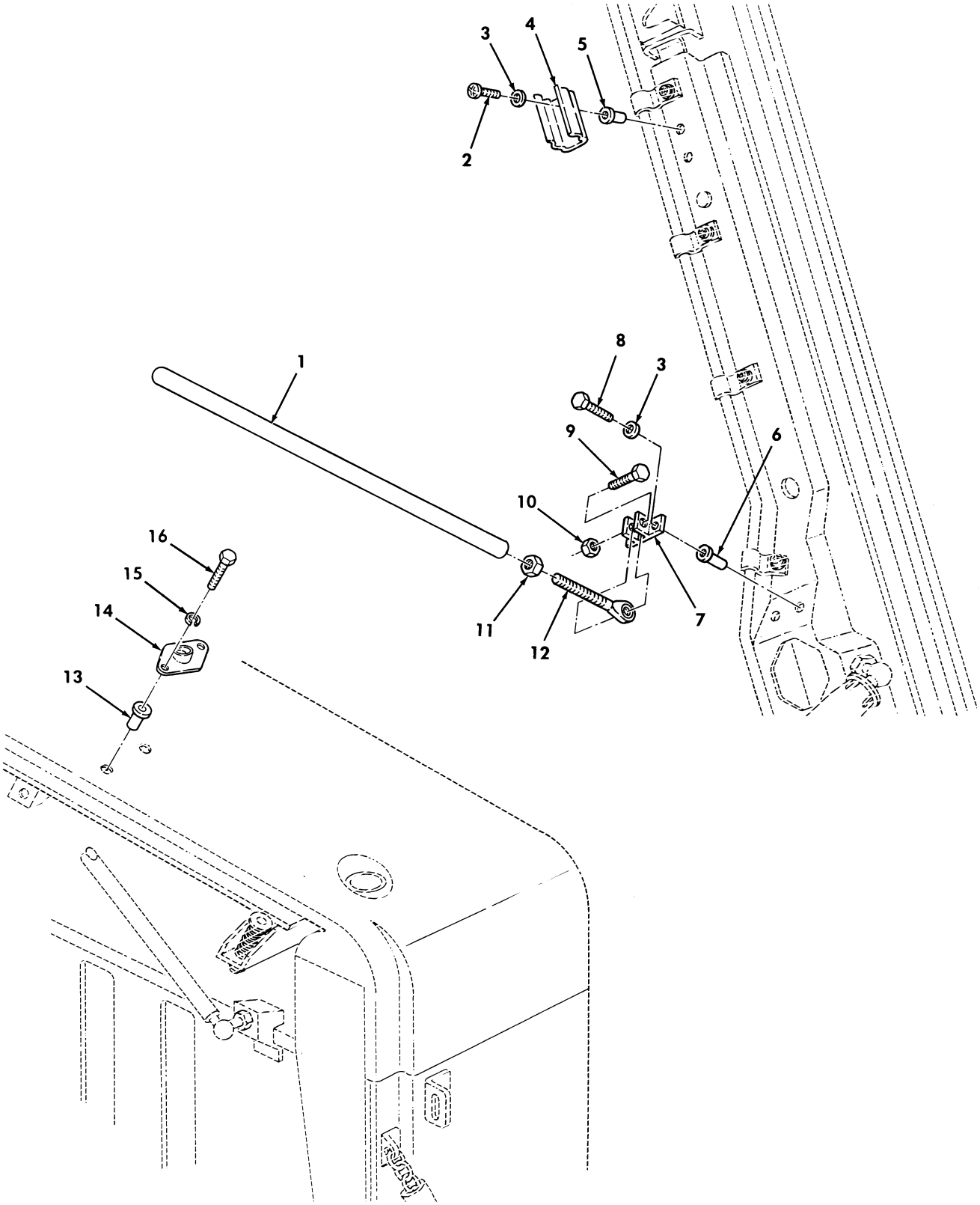

Figure 487. Kit, Rear Hatch Support

(1) ITEM NO	(2) SMR CODE	(3) NSN	(4) CAGEC	(5) PART NUMBER	(6) DESCRIPTION AND USABLE ON CODES(UOC)	(7) QTY
					GROUP 3307 SPECIAL PURPOSE KITS	
					FIG. 487 KIT,REAR HATCH SUPPORT	
1	PAOZZ	5342014594992	19207	12460330	EXTENSION,CONTROL R PART OF KIT P/N 57K3243..... UOC:A25,A26,B17,B18,B25,C17,H17,H18, H25,H26	1
2	PAOZZ	5305014077713	24617	160052	SCREW,MACHINE PART OF KIT P/N 57K3243..... UOC:A25,A26,B17,B18,B25,C17,H17,H18, H25,H26	2
3	PAOZZ	5310009222017	30379	120217	WASHER,LOCK PART OF KIT P/N 57K3243. UOC:A25,A26,B17,B18,B25,C17,H17,H18, H25,H26	4
4	PAOZZ	5340014508693	81343	NAS1464-050-10T	CLIP,SPRING TENSION PART OF KIT P/N 57K3243..... UOC:A25,A26,B17,B18,B25,C17,H17,H18, H25,H26	1
5	PAOZZ	5310009901361	96906	MS27130-S25	NUT,PLAIN,BLIND RIV PART OF KIT P/N 57K3243..... UOC:A25,A26,B17,B18,B25,C17,H17,H18, H25,H26	4
6	PAOZZ	5310010465371	96906	MS27130-CR27	NUT,PLAIN,BLIND RIV PART OF KIT P/N 57K3243..... UOC:A25,A26,B17,B18,B25,C17,H17,H18, H25,H26	2
7	PAOZZ	5340014695774	19207	12460331	BRACKET,MULTIPLE AN PART OF KIT P/N 57K3243..... UOC:A25,A26,B17,B18,B25,C17,H17,H18, H25,H26	1
8	PAOZZ	5305000187838	24617	187838	SCREW,CAP,HEXAGON H PART OF KIT P/N 57K3243..... UOC:A25,A26,B17,B18,B25,C17,H17,H18, H25,H26	2
9	PAOZZ	5305000680509	80204	B1821BH025C125N	SCREW,CAP,HEXAGON H PART OF KIT P/N 57K3243..... UOC:A25,A26,B17,B18,B25,C17,H17,H18, H25,H26	1
10	PAOZZ	5310014326727	24617	9419471	NUT,SELF-LOCKING,HE PART OF KIT P/N 57K3243..... UOC:A25,A26,B17,B18,B25,C17,H17,H18, H25,H26	1
11	PAOZZ	5310007680319	96906	MS51968-2	NUT,PLAIN,HEXAGON PART OF KIT P/N 57K3243..... UOC:A25,A26,B17,B18,B25,C17,H17,H18, H25,H26	1
12	PAOZZ		81343	SAEJ1120	ROD END,THREADED SIZE4,TYPEB3 PART OF KIT P/N 57K3243..... UOC:A25,A26,B17,B18,B25,C17,H17,H18, H25,H26	1
13	PAOZZ	5310000802411	96906	MS27130-S43	NUT,PLAIN,BLIND RIV PART OF KIT P/N 57K3243.....	2

(1) ITEM NO	(2) SMR CODE	(3) NSN	(4) CAGEC	(5) PART NUMBER	(6) DESCRIPTION AND USABLE ON CODES(UOC)	(7) QTY
					UOC:B17,B18,C17,H17,H18	
13	PAOZZ	5310010805746	96906	MS27130-S44	NUT,PLAIN,BLIND RIV PART OF KIT P/N 57K3243.....	2
					UOC:A25,A26,B25,H25,H26	
14	PAOZZ	5340014515903	19207	12460329	PLATE,MOUNTING PART OF KIT P/N 57K3243.....	1
					UOC:A25,A26,B17,B18,B25,C17,H17,H18, H25,H26	
15	PAOZZ	5310004079566	96906	MS-35338-45	WASHER,LOCK PART OF KIT P/N 57K3243.	2
					UOC:A25,A26,B17,B18,B25,C17,H17,H18, H25,H26	
16	PAOZZ	5306002264825	80204	B1821BH031C075N	BOLT,MACHINE PART OF KIT P/N 57K3243	2
					UOC:A25,A26,B17,B18,B25,C17,H17,H18, H25,H26	
KIT	PAOZZ	2510014338551	19207	57K3243	PARTS KIT,CARGO HAT.....	1
					UOC:A25,A26,B17,B18,B25,C17,H17,H18, H25,H26	
					BOLT,MACHINE (2) 487-16	
					BRACKET,MULTIPLE AN(1) 487-7	
					CLIP,SPRING TENSION(1) 487-4	
					EXTENSION,CONTROL R(1) 487-1	
					NUT,PLAIN,BLIND RIV(4) 487-5	
					NUT,PLAIN,BLIND RIV(2) 487-6	
					NUT,PLAIN,BLIND RIV(2) 487-13	
					NUT,PLAIN.BLIND RIV(2) 487-13	
					NUT,PLAIN,HEXAGON (1) 487-11	
					NUT,SELF-LOCKING,HE(1) 487-10	
					PLATE,MOUNTING (1) 487-14	
					ROD,END (1) 487-12	
					SCREW,CAP,HEXAGON H(2) 487-8	
					SCREW,CAP,HEXAGON H(1) 487-9	
					SCREW,MACHINE (2) 487-2	
					WASHER,LOCK (4) 487-3	
					WASHER,LOCK (2) 487-15	

END OF FIGURE

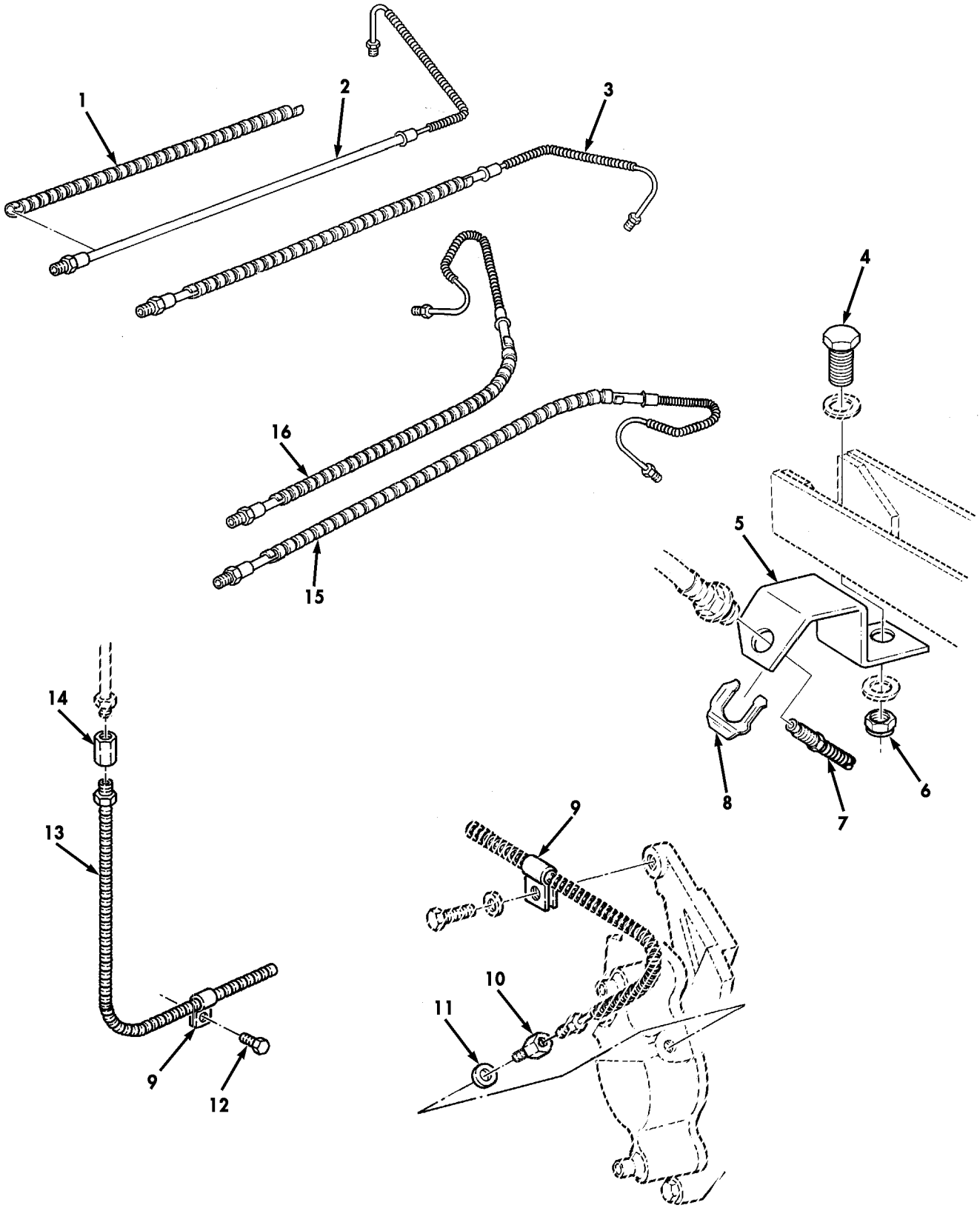

Figure 487A. Flexible Brake Line Kit.

(1) ITEM NO	(2) SMR CODE	(3) NSN	(4) CAGEC	(5) PART NUMBER	(6) DESCRIPTION AND USABLE ON CODES(UOC)	(7) QTY
					GROUP 3307 SPECIAL PURPOSE KITS	
					FIG. 487A FLEXIBLE BRAKE LINE KIT	
* 1	PAOZZ	9330012521239	81349	B47207-II-1/2	TUBING,PLASTIC,SPRI PART OF KIT P/N 57K3503..... UOC:AVY,A11,A13,A14,A15,A20,A24,A25, A26,A27,B16,B17,B18,HVY,H11,H13,H14, H15,H16,H17,H18,H20,H21,H24,H25,H26, H27,H28,MMM	4
* 2	PAOZZ	4720014433033	34623	RCSK18434-3	HOSE ASSEMBLY,NONME L.H.,PART OF KIT P/N 57K3503..... UOC:AVY,A11,A13,A14,A15,A20,A24,A25, A26,A27,B16,B17,B18,HVY,H11,H13,H14, H15,H16,H17,H18,H20,H21,H24,H25,H26, H27,H28,MMM	1
* 3	PAOZZ	4720014429875	34623	RCSK18434-2	HOSE ASSEMBLY,NONME R.H.,PART OF KIT P/N 57K3503..... UOC:AVY,A11,A13,A14,A15,A20,A24,A25, A26,A27,B16,B17,B18,HVY,H11,H13,H14, H15,H16,H17,H18,H20,H21,H24,H25,H26, H27,H28,MMM	1
* 4	PAOZZ	5305000712067	80204	B1821BH050C125N	SCREW,CAP,HEXAGON H PART OF KIT P/N 57K3503..... UOC:AVY,A11,A13,A14,A15,A20,A24,A25, A26,A27,B16,B17,B18,HVY,H11,H13,H14, H15,H16,H17,H18,H20,H21,H24,H25,H26, H27,H28,MMM	4
* 5	PAOZZ	5340014348109	34623	EX4228-2	BRACKET,MULTIPLE AN L.H.,PART OF KIT P/N 57K3503..... UOC:AVY,A11,A13,A14,A15,A20,A24,A25, A26,A27,B16,B17,B18,HVY,H11,H13,H14, H15,H16,H17,H18,H20,H21,H24,H25,H26, H27,H28,MMM	2
* 5	PAOZZ	5340014328681	34623	EX4228-1	BRACKET,MULTIPLE AN R.H.,PART OF KIT P/N 57K3503..... UOC:AVY,A11,A13,A14,A15,A20,A24,A25, A26,A27,B16,B17,B18,HVY,H11,H13,H14, H15,H16,H17,H18,H20,H21,H24,H25,H26, H27,H28,MMM	2
* 6	PAOZZ	5310004883889	96906	MS51943-39	NUT,SELF-LOCKING,HE PART OF KIT P/N 57K3503..... UOC:AVY,A11,A13,A14,A15,A20,A24,A25, A26,A27,B16,B17,B18,HVY,H11,H13,H14, H15,H16,H17,H18,H20,H21,H24,H25,H26, H27,H28,MMM	4
* 7	PAOZZ	4710014343151	34623	EX4231-3	TUBE ASSEMBLY,METAL PART OF KIT P/N 57K3503..... UOC:AVY,A11,A13,A14,A15,A20,A24,A25, A26,A27,B16,B17,B18,HVY,H11,H13,H14, H15,H16,H17,H18,H20,H21,H24,H25,H26, H27,H28,MMM	2
* 8	PAOZZ	5342006781753	19207	7331407	CLIP,HAND BRAKE PART OF KIT P/N	4

(1) ITEM NO	(2) SMR CODE	(3) NSN	(4) CAGEC	(5) PART NUMBER	(6) DESCRIPTION AND USABLE ON CODES(UOC)	(7) QTY
					57K3503..... UOC:AVY,A11,A13,A14,A15,A20,A24,A25, A26,A27,B16,B17,B18,HVY,H11,H13,H14, H15,H16,H17,H18,H20,H21,H24,H25,H26, H27,H28,MMM	
* 9	PAOZZ	5340011897640	7X677	179148	CLAMP,LOOP PART OF KIT P/N 57K3503. UOC:AVY,A11,A13,A14,A15,A20,A24,A25, A26,A27,B16,B17,B18,HVY,H11,H13,H14, H15,H16,H17,H18,H20,H21,H24,H25,H26, H27,H28,MMM	2
* 10	PAOZZ	4730011846971	34623	12339235	COUPLING,TUBE PART OF KIT P/N 57K3503..... UOC:AVY,A11,A13,A14,A15,A20,A24,A25, A26,A27,B16,B17,B18,HVY,H11,H13,H14, H15,H16,H17,H18,H20,H21,H24,H25,H26, H27,H28,MMM	2
* 11	PAOZZ	5310011898476	34623	5582366	WASHER,FLAT PART OF KIT P/N 57K3503 UOC:AVY,A11,A13,A14,A15,A20,A24,A25, A26,A27,B16,B17,B18,HVY,H11,H13,H14, H15,H16,H17,H18,H20,H21,H24,H25,H26, H27,H28,MMM	2
* 12	PAOZZ	5305013936311	24617	271153	SCREW,TAPPING PART OF KIT P/N 57K3503..... UOC:AVY,A11,A13,A14,A15,A20,A24,A25, A26,A27,B16,B17,B18,HVY,H11,H13,H14, H15,H16,H17,H18,H20,H21,H24,H25,H26, H27,H28,MMM	2
* 13	PAOZZ	4710014343037	34623	EX4233	TUBE ASSEMBLY,METAL PART OF KIT P/N 57K3503..... UOC:AVY,A11,A13,A14,A15,A20,A24,A25, A26,A27,B16,B17,B18,HVY,H11,H13,H14, H15,H16,H17,H18,H20,H21,H24,H25,H26, H27,H28,MMM	2
* 14	PAOZZ	4730014570727	72582	442393	COUPLING,HOSE PART OF KIT P/N 57K3503..... UOC:AVY,A11,A13,A14,A15,A20,A24,A25, A26,A27,B16,B17,B18,HVY,H11,H13,H14, H15,H16,H17,H18,H20,H21,H24,H25,H26, H27,H28,MMM	1
* 15	PAOZZ	4720014433481	34623	RCSK18435-3	TUBE ASSEMBLY,METAL L.H.,PART OF KIT P/N 57K3503..... UOC:AVY,A11,A13,A14,A15,A20,A24,A25, A26,A27,B16,B17,B18,HVY,H11,H13,H14, H15,H16,H17,H18,H20,H21,H24,H25,H26, H27,H28,MMM	1
* 16	PAOZZ	4720014438487	34623	RCSK18435-2	HOSE ASSEMBLY,NONME R.H.,PART OF KIT P/N 57K3503..... UOC:AVY,A11,A13,A14,A15,A20,A24,A25, A26,A27,B16,B17,B18,HVY,H11,H13,H14, H15,H16,H17,H18,H20,H21,H24,H25,H26, H27,H28,MMM	1

END OF FIGURE

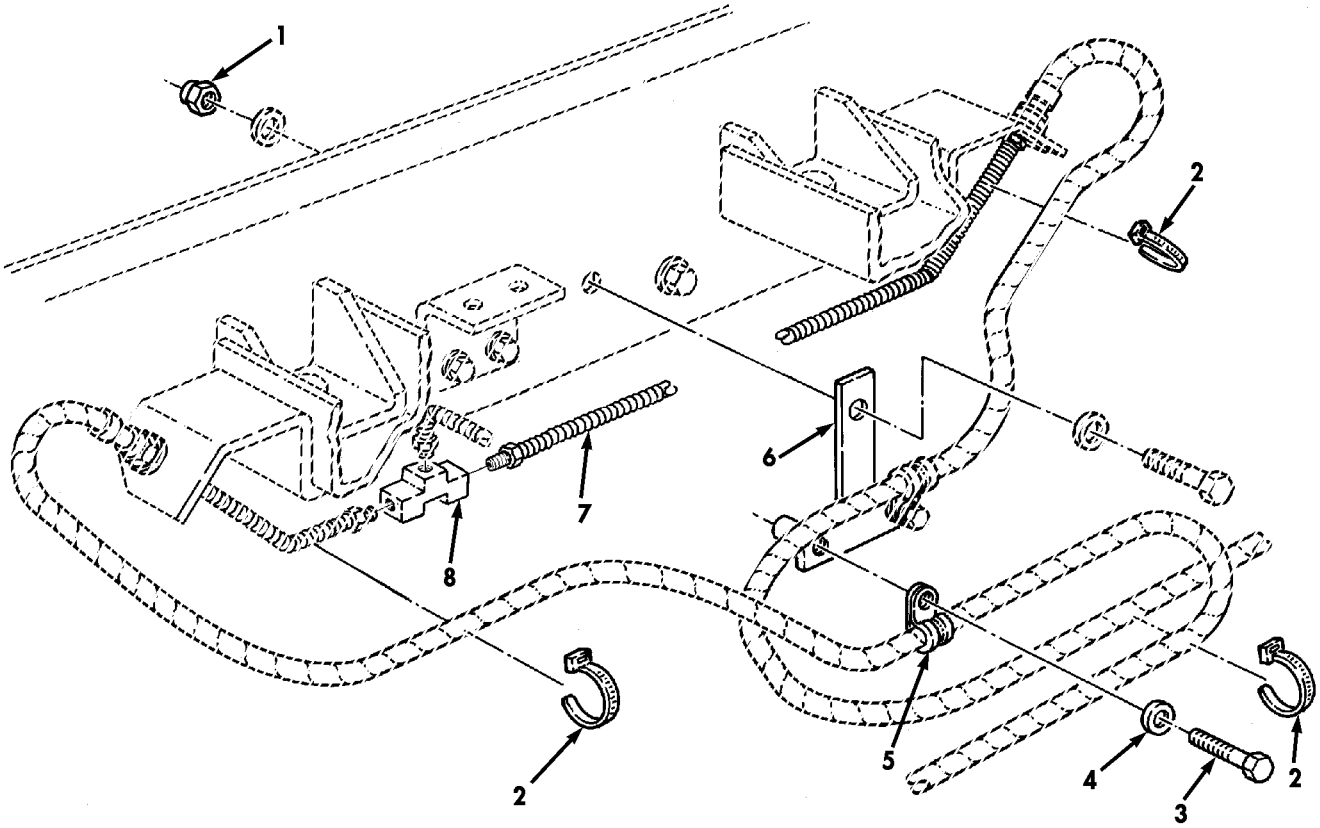

Figure 487B. Flexible Brake Line Kit.

(1) ITEM NO	(2) SMR CODE	(3) NSN	(4) CAGEC	(5) PART NUMBER	(6) DESCRIPTION AND USABLE ON CODES(UOC)	(7) QTY
					GROUP 3307 SPECIAL PURPOSE KITS	
					FIG. 487B FLEXIBLE BRAKE LINE KIT	
* 1	PAOZZ	5310004883889	96906	MS51943-39	NUT,SELF-LOCKING,HE PART OF KIT P/N 57K3503..... UOC:AVY,A11,A13,A14,A15,A20,A24,A25, A26,A27,B16,B17,B18,HVY,H11,H13,H14, H15,H16,H17,H18,H20,H21,H24,H25,H26, H27,H28,MMM	1
* 2	PAOZZ	5975009846582	96906	MS3367-1-0	STRAP,TIEDOWN,ELECT PART OF KIT P/N 57K3503..... UOC:AVY,A11,A13,A14,A15,A20,A24,A25, A26,A27,B16,B17,B18,HVY,H11,H13,H14, H15,H16,H17,H18,H20,H21,H24,H25,H26, H27,H28,MMM	3
* 3	PAOZZ	5306002264825	80204	B1821BH031C075N	SCREW,CAP,HEXAGON H PART OF KIT P/N 57K3503..... UOC:AVY,A11,A13,A14,A15,A20,A24,A25, A26,A27,B16,B17,B18,HVY,H11,H13,H14, H15,H16,H17,H18,H20,H21,H24,H25,H26, H27,H28,MMM	2
* 4	PAOZZ	5310000814219	96906	MS27183-12	WASHER,FLAT PART OF KIT P/N 57K3503 UOC:AVY,A11,A13,A14,A15,A20,A24,A25, A26,A27,B16,B17,B18,HVY,H11,H13,H14, H15,H16,H17,H18,H20,H21,H24,H25,H26, H27,H28,MMM	2
* 5	PAOZZ	5340009891771	96906	MS21333-123	CLAMP,LOOP PART OF KIT P/N 57K3503. UOC:AVY,A11,A13,A14,A15,A20,A24,A25, A26,A27,B16,B17,B18,HVY,H11,H13,H14, H15,H16,H17,H18,H20,H21,H24,H25,H26, H27,H28,MMM	2
* 6	PAOZZ	5340014588236	34623	EXCE4718	BRACKET,T PART OF KIT P/N 57K3503.. UOC:AVY,A11,A13,A14,A15,A20,A24,A25, A26,A27,B16,B17,B18,HVY,H11,H13,H14, H15,H16,H17,H18,H20,H21,H24,H25,H26, H27,H28,MMM	1
* 7	PAOZZ	4710014343157	34623	EX4231-4	TUBE ASSEMBLY,METAL R.H.,PART OF KIT P/N 57K3503..... UOC:AVY,A11,A13,A14,A15,A20,A24,A25, A26,A27,B16,B17,B18,HVY,H11,H13,H14, H15,H16,H17,H18,H20,H21,H24,H25,H26, H27,H28,MMM	2
* 8	PAOZZ	4730002871706	61208	178654	TEE,TUBE PART OF KIT P/N 57K3503... UOC:AVY,A11,A13,A14,A15,A20,A24,A25, A26,A27,B16,B17,B18,HVY,H11,H13,H14, H15,H16,H17,H18,H20,H21,H24,H25,H26, H27,H28,MMM	1

END OF FIGURE

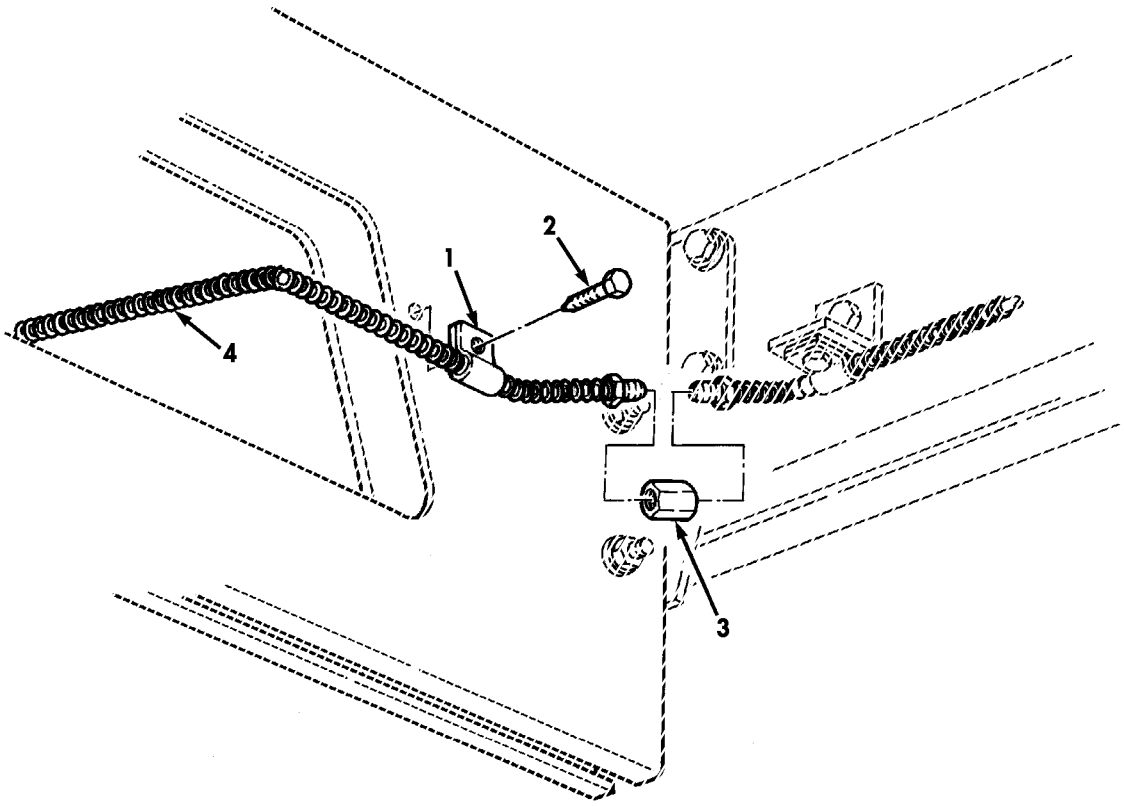

Figure 487C. Flexible Brake Line Kit.

(1) ITEM NO	(2) SMR CODE	(3) NSN	(4) CAGEC	(5) PART NUMBER	(6) DESCRIPTION AND USABLE ON CODES(UOC)	(7) QTY
					GROUP 3307 SPECIAL PURPOSE KITS	
					FIG. 487C FLEXIBLE BRAKE LINE KIT	
* 1	PAOZZ	5340011897640	7X677	179148	CLAMP,LOOP PART OF KIT P/N 57K3503. UOC:AVY,A11,A13,A14,A15,A20,A24,A25, A26,A27,B16,B17,B18,HVY,H11,H13,H14, H15,H16,H17,H18,H20,H21,H24,H25,H26, H27,H28,MMM	2
* 2	PAOZZ	5305013936311	24617	271153	SCREW,TAPPING PART OF KIT P/N 57K3503..... UOC:AVY,A11,A13,A14,A15,A20,A24,A25, A26,A27,B16,B17,B18,HVY,H11,H13,H14, H15,H16,H17,H18,H20,H21,H24,H25,H26, H27,H28,MMM	2
* 3	PAOZZ	4730014570727	72582	442393	COUPLING,HOSE PART OF KIT P/N 57K3503..... UOC:AVY,A11,A13,A14,A15,A20,A24,A25, A26,A27,B16,B17,B18,HVY,H11,H13,H14, H15,H16,H17,H18,H20,H21,H24,H25,H26, H27,H28,MMM	2
* 4	PAOZZ	4710014343159	34623	EX4234	TUBE ASSEMBLY,METAL PART OF KIT P/N 57K3503..... UOC:AVY,A11,A13,A14,A15,A20,A24,A25, A26,A27,B16,B17,B18,HVY,H11,H13,H14, H15,H16,H17,H18,H20,H21,H24,H25,H26, H27,H28,MMM	1

END OF FIGURE

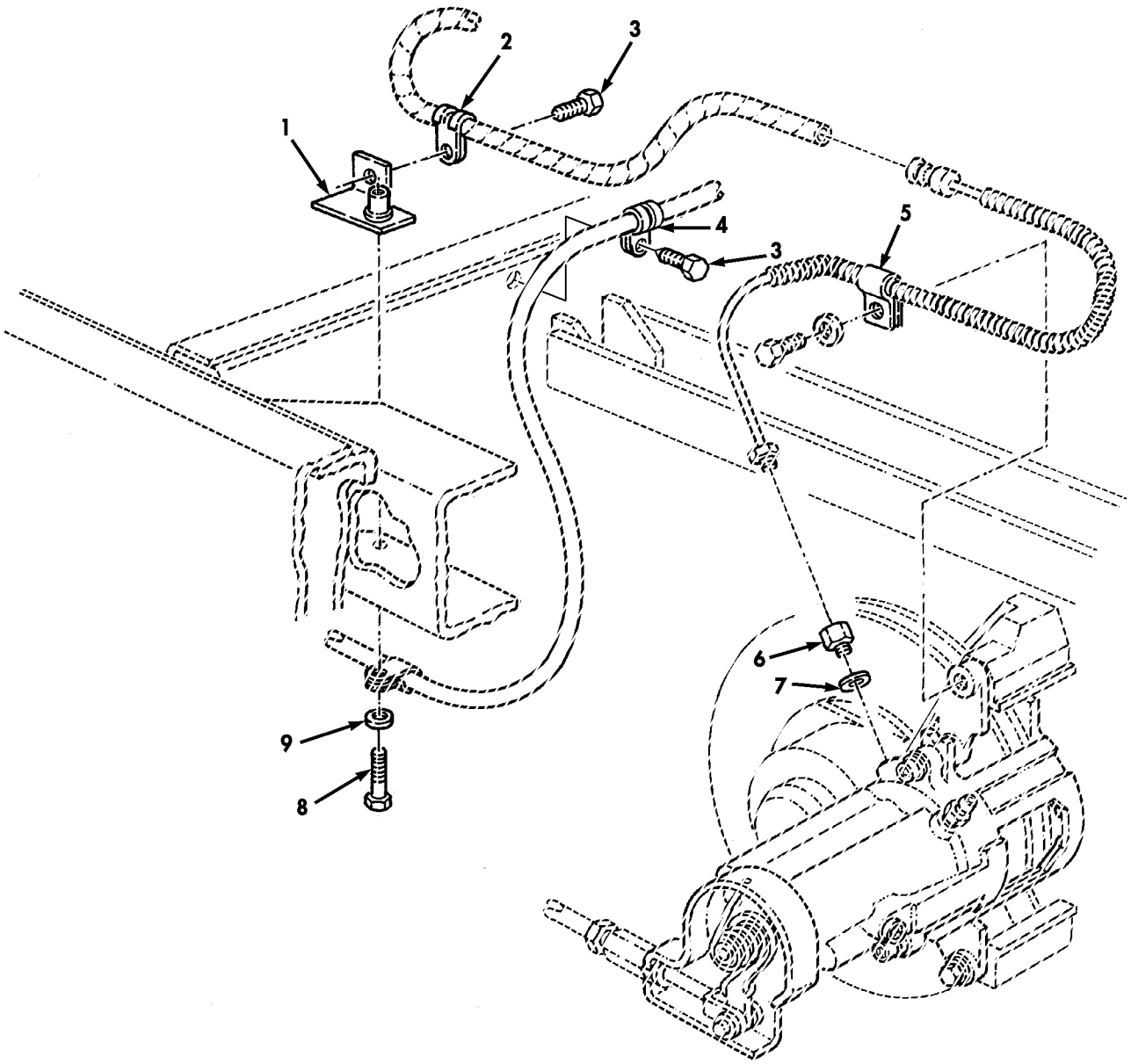

Figure 487D. Flexible Brake Line Kit.

(1) ITEM NO	(2) SMR CODE	(3) NSN	(4) CAGEC	(5) PART NUMBER	(6) DESCRIPTION AND USABLE ON CODES(UOC)	(7) QTY
					GROUP 3307 SPECIAL PURPOSE KITS	
					FIG. 487D FLEXIBLE BRAKE LINE KIT	
* 1	PAOZZ	5340014587156	34623	EX4717-1	BRACKET,ANGLE L.H.,PART OF KIT P/N 57K3503..... UOC:AVY,A11,A13,A14,A15,A20,A24,A25, A26,A27,B16,B17,B18,HVY,H11,H13,H14, H15,H16,H17,H18,H20,H21,H24,H25,H26, H27,H28,MMM	1
* 1	PAOZZ	5340014587147	34623	EX4717-2	BRACKET,ANGLE R.H.,PART OF KIT P/N 57K3503..... UOC:AVY,A11,A13,A14,A15,A20,A24,A25, A26,A27,B16,B17,B18,HVY,H11,H13,H14, H15,H16,H17,H18,H20,H21,H24,H25,H26, H27,H28,MMM	1
* 2	PAOZZ	5340009891771	96906	MS21333-123	CLAMP,LOOP PART OF KIT P/N 57K3503. UOC:AVY,A11,A13,A14,A15,A20,A24,A25, A26,A27,B16,B17,B18,HVY,H11,H13,H14, H15,H16,H17,H18,H20,H21,H24,H25,H26, H27,H28,MMM	2
* 3	PAOZZ	5305013936311	24617	271153	SCREW,TAPPING PART OF KIT P/N 57K3503..... UOC:AVY,A11,A13,A14,A15,A20,A24,A25, A26,A27,B16,B17,B18,HVY,H11,H13,H14, H15,H16,H17,H18,H20,H21,H24,H25,H26, H27,H28,MMM	2
* 4	PAOZZ	5340009645267	96906	MS21333-120	CLAMP,LOOP PART OF KIT P/N 57K3503. UOC:AVY,A11,A13,A14,A15,A20,A24,A25, A26,A27,B16,B17,B18,HVY,H11,H13,H14, H15,H16,H17,H18,H20,H21,H24,H25,H26, H27,H28,MMM	2
* 5	PAOZZ	5340011897640	7X677	179148	CLAMP,LOOP PART OF KIT P/N 57K3503. UOC:AVY,A11,A13,A14,A15,A20,A24,A25, A26,A27,B16,B17,B18,HVY,H11,H13,H14, H15,H16,H17,H18,H20,H21,H24,H25,H26, H27,H28,MMM	2
* 6	PAOZZ	4730011846971	34623	12339235	COUPLING,TUBE PART OF KIT P/N 57K3503..... UOC:AVY,A11,A13,A14,A15,A20,A24,A25, A26,A27,B16,B17,B18,HVY,H11,H13,H14, H15,H16,H17,H18,H20,H21,H24,H25,H26, H27,H28,MMM	2
* 7	PAOZZ	5310011898476	34623	5582366	WASHER,FLAT PART OF KIT P/N 57K3503 UOC:AVY,A11,A13,A14,A15,A20,A24,A25, A26,A27,B16,B17,B18,HVY,H11,H13,H14, H15,H16,H17,H18,H20,H21,H24,H25,H26, H27,H28,MMM	2
* 8	PAOZZ	5306002264828	80204	B1821BH031C113N	BOLT,MACHINE PART OF KIT P/N 57K3503..... UOC:AVY,A11,A13,A14,A15,A20,A24,A25, A26,A27,B16,B17,B18,HVY,H11,H13,H14, H15,H16,H17,H18,H20,H21,H24,H25,H26,	2

(1) ITEM NO	(2) SMR CODE	(3) NSN	(4) CAGEC	(5) PART NUMBER	(6) DESCRIPTION AND USABLE ON CODES(UOC)	(7) QTY
					H27,H28,MMM	
* 9	PAOZZ	5310000814219	96906	MS27183-12	WASHER,FLAT PART OF KIT P/N 57K3503 UOC:AVY,A11,A13,A14,A15,A20,A24,A25, A26,A27,B16,B17,B18,HVY,H11,H13,H14, H15,H16,H17,H18,H20,H21,H24,H25,H26, H27,H28,MMM	2
*KIT	PAOZZ	4720014715063	19207	57K3503	PARTS KIT,HOSE ASSE FLEXIBLE BRAKE LINES..... UOC:AVY,A11,A13,A14,A15,A20,A24,A25, A26,A27,B16,B17,B18,HVY,H11,H13,H14, H15,H16,H17,H18,H20,H21,H24,H25,H26, H27,H28,MMM	1
					BOLT,MACHINE (2) 487D-8	
					BRACKET,ANGLE (1) 487D-1	
					BRACKET,ANGLE (1) 487D-1	
					BRACKET,MULTIPLE AN(2) 487A-5	
					BRACKET,MULTIPLE AN(2) 487A-5	
					BRACKET,T (1) 487B-6	
					CLAMP,LOOP (2) 487A-9	
					CLAMP,LOOP (2) 487B-5	
					CLAMP,LOOP (2) 487C-1	
					CLAMP,LOOP (2) 487D-2	
					CLAMP,LOOP (2) 487D-4	
					CLAMP,LOOP (2) 487D-5	
					CLIP,HAND BRAKE (4) 487A-8	
					COUPLING,HOSE (1) 487A-14	
					COUPLING,HOSE (2) 487C-3	
					COUPLING,TUBE (2) 487A-10	
					COUPLING,TUBE (2) 487D-6	
					HOSE ASSEMBLY,NONME(1) 487A-2	
					HOSE ASSEMBLY,NONME(1) 487A-3	
					HOSE ASSEMBLY,NONME(1) 487A-16	
					NUT,SELF-LOCKING,HE(4) 487A-6	
					NUT,SELF-LOCKING,HE(1) 487B-1	
					SCREW,CAP,HEXAGON H(4) 487A-4	
					SCREW,CAP,HEXAGON H(2) 487B-3	
					SCREW,TAPPING (2) 487A-12	
					SCREW,TAPPING (2) 487C-2	
					SCREW,TAPPING (2) 487D-3	
					STRAP,TIEDOWN ELECT(3) 487B-2	
					TEE,TUBE (1) 487B-8	
					TUBE ASSEMBLY,METAL(2) 487A-7	
					TUBE ASSEMBLY,METAL(2) 487A-13	
					TUBE ASSEMBLY,METAL(1) 487A-15	
					TUBE ASSEMBLY,METAL(1) 487B-7	
					TUBE ASSEMBLY,METAL(1) 487C-4	
					TUBING,PLASTIC,SPRI(4) 487A-1	
					WASHER,FLAT (2) 487A-11	
					WASHER,FLAT (2) 487B-4	
					WASHER,FLAT (2) 487D-7	
					WASHER,FLAT (2) 487D-9	

END OF FIGURE

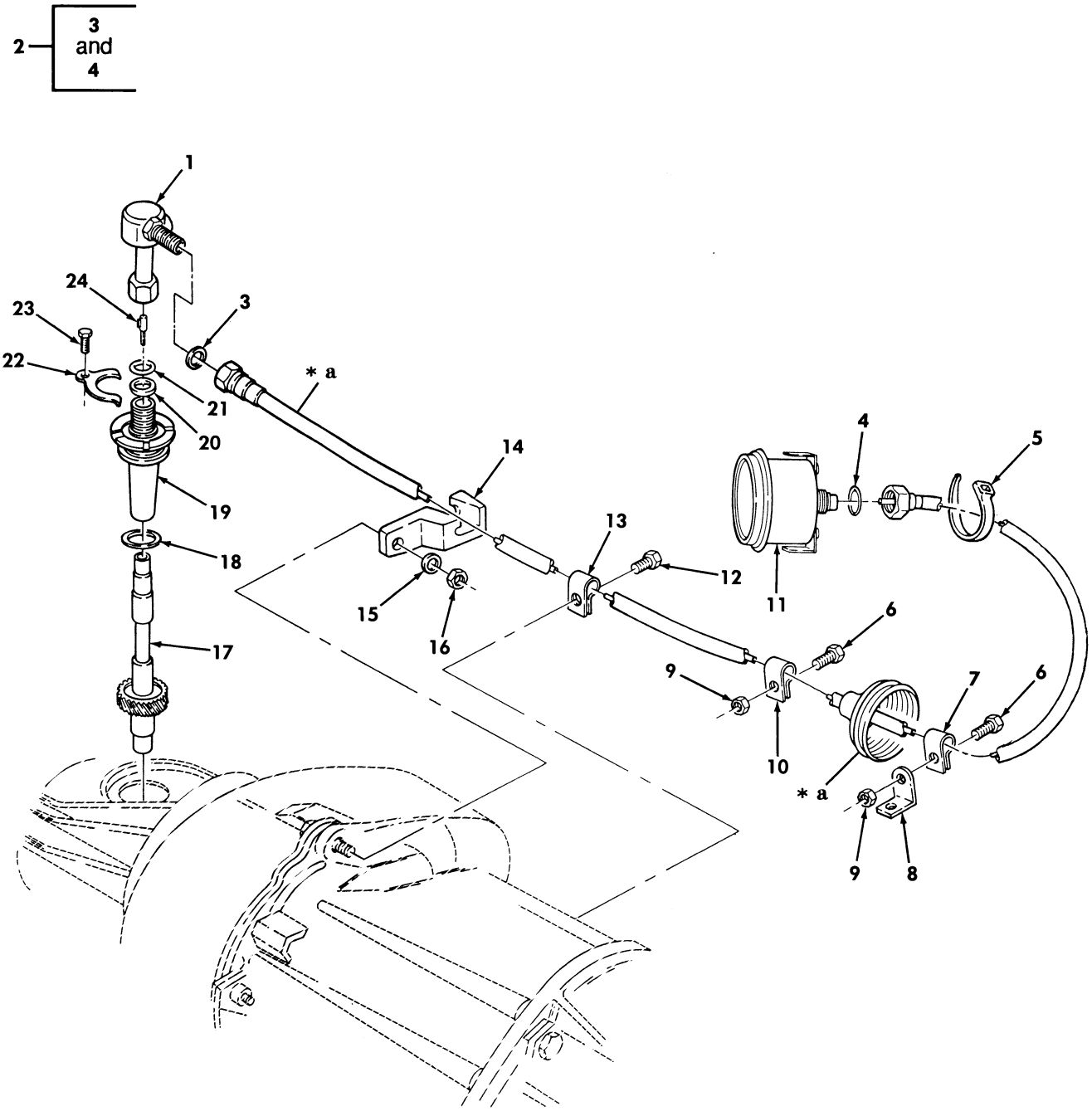

* a PART OF ITEM 2

Figure 488. Speedometer, Speedometer Drive, and Related Parts.

(1) ITEM NO	(2) SMR CODE	(3) NSN	(4) CAGEC	(5) PART NUMBER	(6) DESCRIPTION AND USABLE ON CODES(UOC)	(7) QTY
					GROUP 47 GAGES,WEIGHTING AND MEASURE -ING DEVICES	
					4701 INSTRUMENTS	
					FIG. 488 SPEEDOMETER,SPEEDOMETER DRIVE,AND RELATED PARTS	
1	PAOZZ	2590012125868	7Z588	SP-311	ADAPTER,SPEEDOMETER.....	1
* 2	PAOZZ	6680014429413	19200	12338428-2	SHAFT ASSEMBLY,FLEX.....	1
3	PAOZZ	5331012167392	19207	12338998	.O-RING.....	1
4	PAOZZ	5331012167393	19207	12338997	.O-RING.....	1
5	PAOZZ	5975001563253	96906	MS3367-2-9	STRAP,TIEDOWN,ELECT.....	1
					UOC:BVY,B15,B20,B24,B25,C17,NNN	
* 6	PAOZZ	5305005829501	82386	410-63	SCREW,CAP,HEXAGON H #10-32 X 1/2...	2
* 7	PAOZZ	5340006899514	96906	MS21333-70	CLAMP,LOOP.....	2
* 8	PAOZZ	5340014481213	19207	12460199	BRACKET,ANGLE.....	2
* 9	PAOZZ	5310001249265	72582	271169	NUT,PLAIN,ASSEMBLED #10-32.....	2
10	PAOZZ	5340001501658	17773	11176106-5	CLAMP,LOOP.....	1
* 11	PAOZZ	6680011952146	19207	12338463	SPEEDOMETER.....	1
* 12	PAOZZ	5305007578122	96906	MS51851-64	SCREW,TAPPING #10-24 X 3/8.....	1
* 13	PAOZZ	5340000913790	96906	MS21333-72	CLAMP,LOOP.....	1
* 14	PAOZZ	5342011937088	34623	5583576	BRACKET.....	1
* 15	PAOZZ	5310005956057	96906	MS15795-815	WASHER,FLAT 10MM.....	1
* 16	PAOZZ	5310012666392	34623	5593047	NUT,PLAIN,HEXAGON 10M-1.5.....	1
* 17	PAOZZ	3040012443646	92871	3212735	GEARSHAFT,HELICAL.....	1
					UOC:HVY,H11,H13,H14,H15,H16,H17,H18, H20,H21,H24,H25,H26,H27,H28,MMM	
* 17	PAOZZ	3040013587034	34623	12342602	GEARSHAFT,HELICAL.....	1
					UOC:AVY,A11,A13,A14,A15,A20,A24,A25, A26,A27,BVY,B15,B16,B17,B18,B20,B24, B25,C17,HVY,NNN	
* 18	PAOZZ	5331011958889	34623	12339002	O-RING.....	1
* 19	PAOZZ	3040011923673	92871	J3212893	ADAPTER,SPEEDOMETER.....	1
* 20	PAOZZ	5330012554986	34623	5595643	RETAINER,PACKING.....	1
* 21	PAOZZ	5330004095291	12204	4883434AA	SEAL.....	1
* 22	PAOZZ	6680002690335	86403	2892399	STRAP,RETAINING.....	1
* 23	PAOZZ	5306002264824	80204	B1821BH031C063N	BOLT,MACHINE.....	1
* 24	PAOZZ	5315014091662	7Z588	30448-D	PIN,SHOULDER,HEADLE.....	1

END OF FIGURE

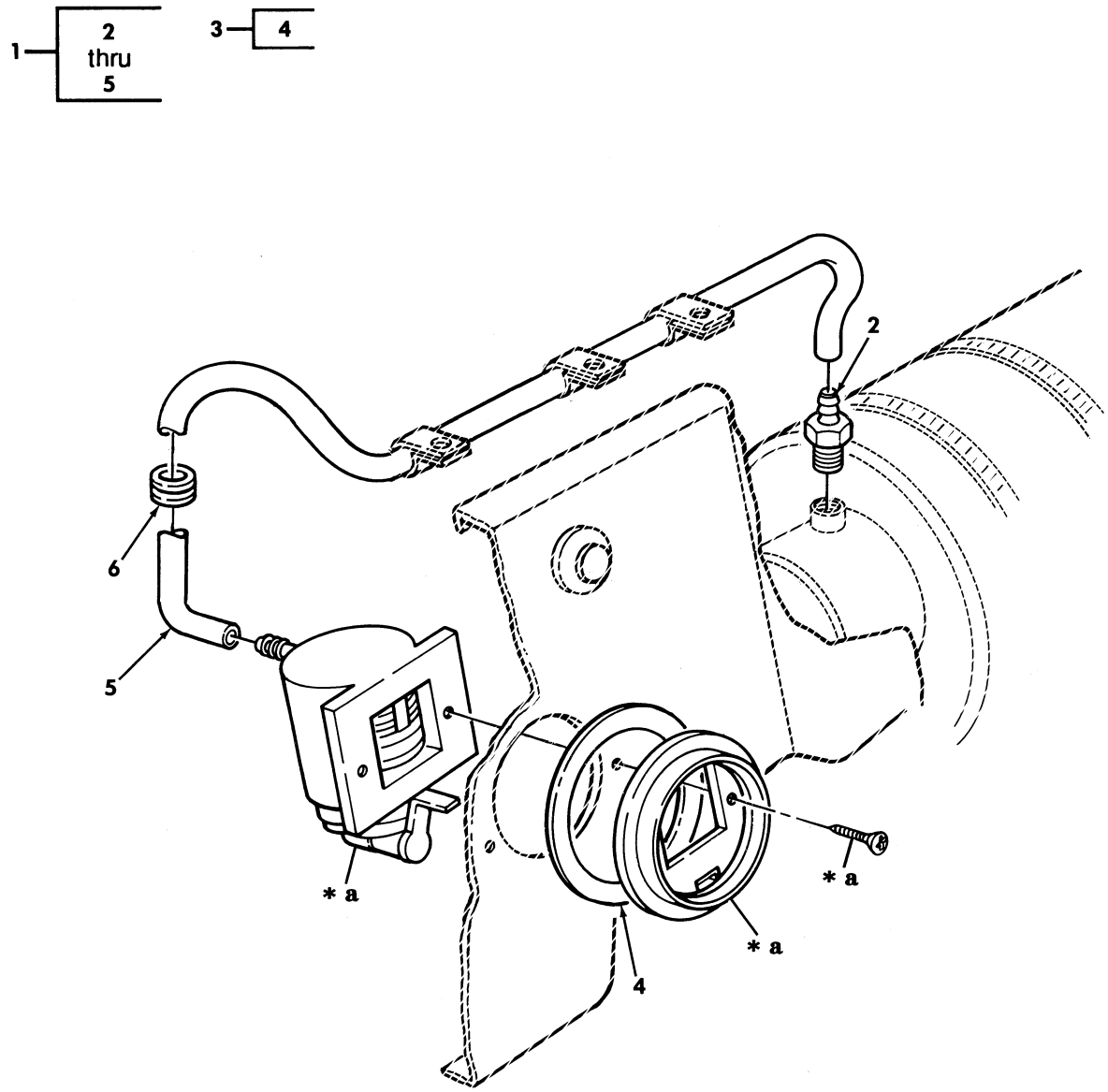

* a PART OF ITEM 3

Figure 489. Air Restriction Indicator Assembly.

(1) ITEM NO	(2) SMR CODE	(3) NSN	(4) CAGEC	(5) PART NUMBER	(6) DESCRIPTION AND USABLE ON CODES(UOC)	(7) QTY
					GROUP 4702 GAGES,MOUNTING LINES AND FITTINGS	
					FIG. 489 AIR RESTRICTION INDICATOR ASSEMBLY	
1	PAOOO	2940011761427	59150	4755-725	INDICATOR,FILTER WA.....	1
2	PAOZZ	4730011894600	59150	1675-182	.ADAPTER,STRAIGHT,PI.....	1
3	XAOZZ		59150	1755-724	.INDICATOR.....	1
4	PAOZZ	5330014769295	19207	12340078-3	..GASKET.....	1
5	MOOZZ		19207	12340078-5	.HOSE MAKE FROM HOSE,P/N 1775-826, 7.00 FEET LONG.....	1
6	PAOZZ	5325002766228	87585	ANA9-5	GROMMET,NONMETALLIC.....	1

END OF FIGURE

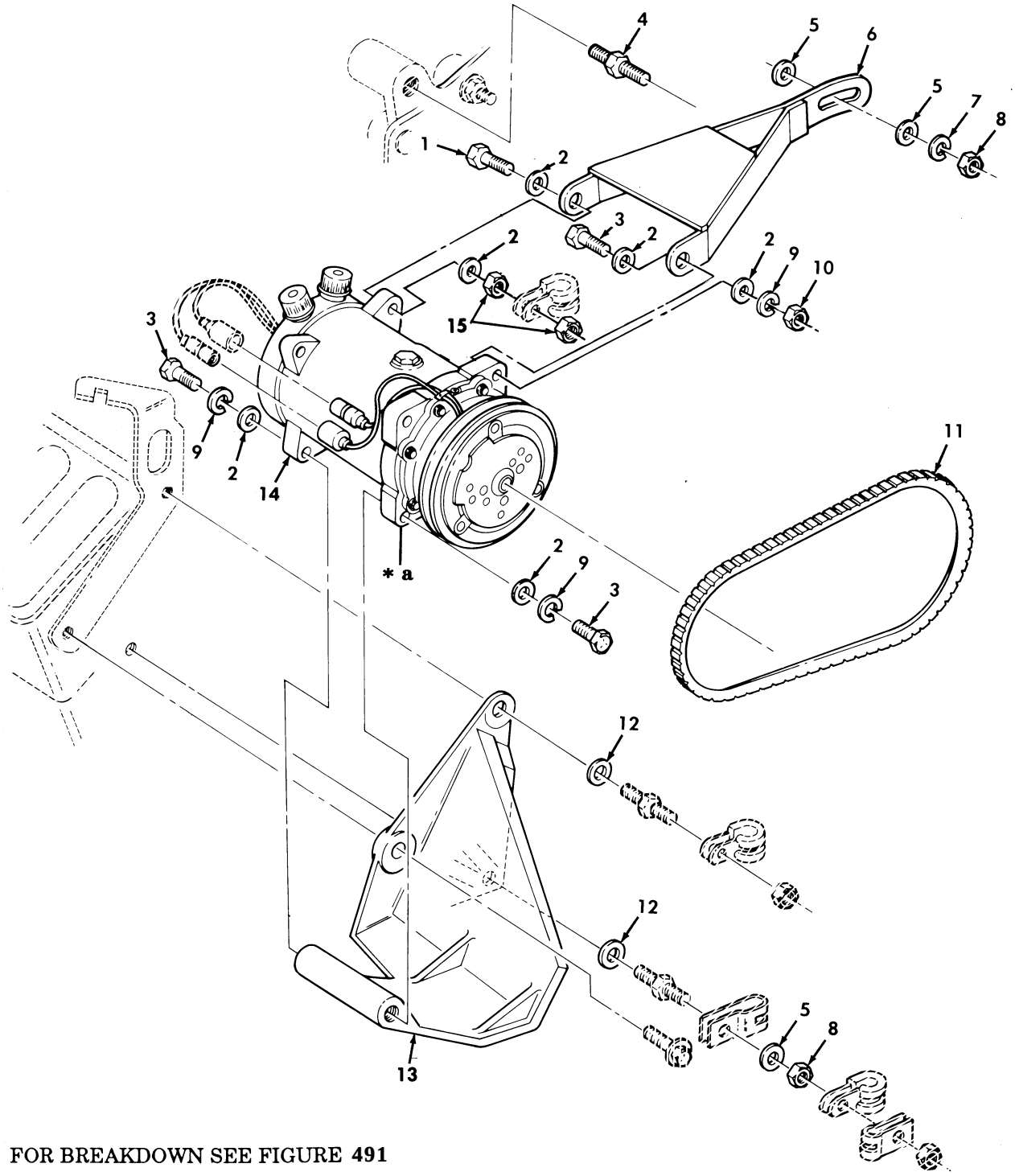

* a FOR BREAKDOWN SEE FIGURE 491

Figure 490. Air Conditioner Compressor and Mounting Hardware, M997 and M997A1 Ambulance.

(1) ITEM NO	(2) SMR CODE	(3) NSN	(4) CAGEC	(5) PART NUMBER	(6) DESCRIPTION AND USABLE ON CODES(UOC)	(7) QTY
					GROUP 52 REFRIGERATION,AIR CONDITIONER,HEATER AND AIR CONDITIONING COMPONENTS	
					5203 AIR CONDITIONING COMPONENTS	
					FIG. 490 AIR CONDITIONER COMPRESSOR AND MOUNTING HARDWARE,M997 AND M997A1 AMBULANCE	
1	PAOZZ	5305007252317	80204	B1821BH038C150N	SCREW,CAP,HEXAGON H 3/8-16 X 1.50.. UOC:A15,H15	1
2	PAOZZ	5310000877493	96906	MS27183-13	WASHER,FLAT 3/8..... UOC:A15,H15	7
3	PAOZZ	5305007829489	80204	B1821BH038C200N	SCREW,CAP,HEXAGON H 3/8-16 X 2.00.. UOC:A15,H15	3
4	PAFZZ	5307012919018	19207	12339406-2	STUD,SHOULDERED #10-1.5 X 30..... UOC:A15,H15	2
5	PAFZZ	5310011478743	7X677	3790768	WASHER,FLAT #10..... UOC:A15,H15	3
* 6	PAFZZ	5340012732368	34623	5598302	BRACKET,MOUNTING..... UOC:A15,H15	1
7	PAOZZ	5310012067306	7X677	11500207	WASHER,LOCK 10MM..... UOC:A15,H15	1
8	PAOZZ	5310013958747	80204	B18241B100F	NUT,PLAIN,HEXAGON #10-1.5..... UOC:A15,H15	2
9	PAOZZ	5310006379541	96906	MS35338-46	WASHER,LOCK 3/8..... UOC:A15,H15	3
10	PAOZZ	5310009359021	96906	MS51943-35	NUT,SELF-LOCKING,HE 3/8-16..... UOC:A15,H15	1
* 11	PAOZZ	3030008994888	7X677	9433741	BELT,V 3/8 X 43.75..... UOC:A15,H15	1
* 11	PAOZZ	3030013328526	9C234	12339359-27	BELT,V 3/8 X 43.75,COLD WEATHER.... UOC:A15,H15	1
12	PAFZZ	5310012046745	24617	11500324	WASHER,FLAT #10..... UOC:A15,H15	2
13	PAFZZ	5340012726634	19207	12339906	BRACKET,MOUNTING..... UOC:A15,H15	1
14	PAFFF	2530011975502	19207	12340661	COMPRESSOR,RECIPROC..... UOC:A15,H15	1
15	PAOZZ	5310007320558	96906	MS51967-8	NUT,PLAIN,HEXAGON 3/8-16..... UOC:A15,H15	2

END OF FIGURE

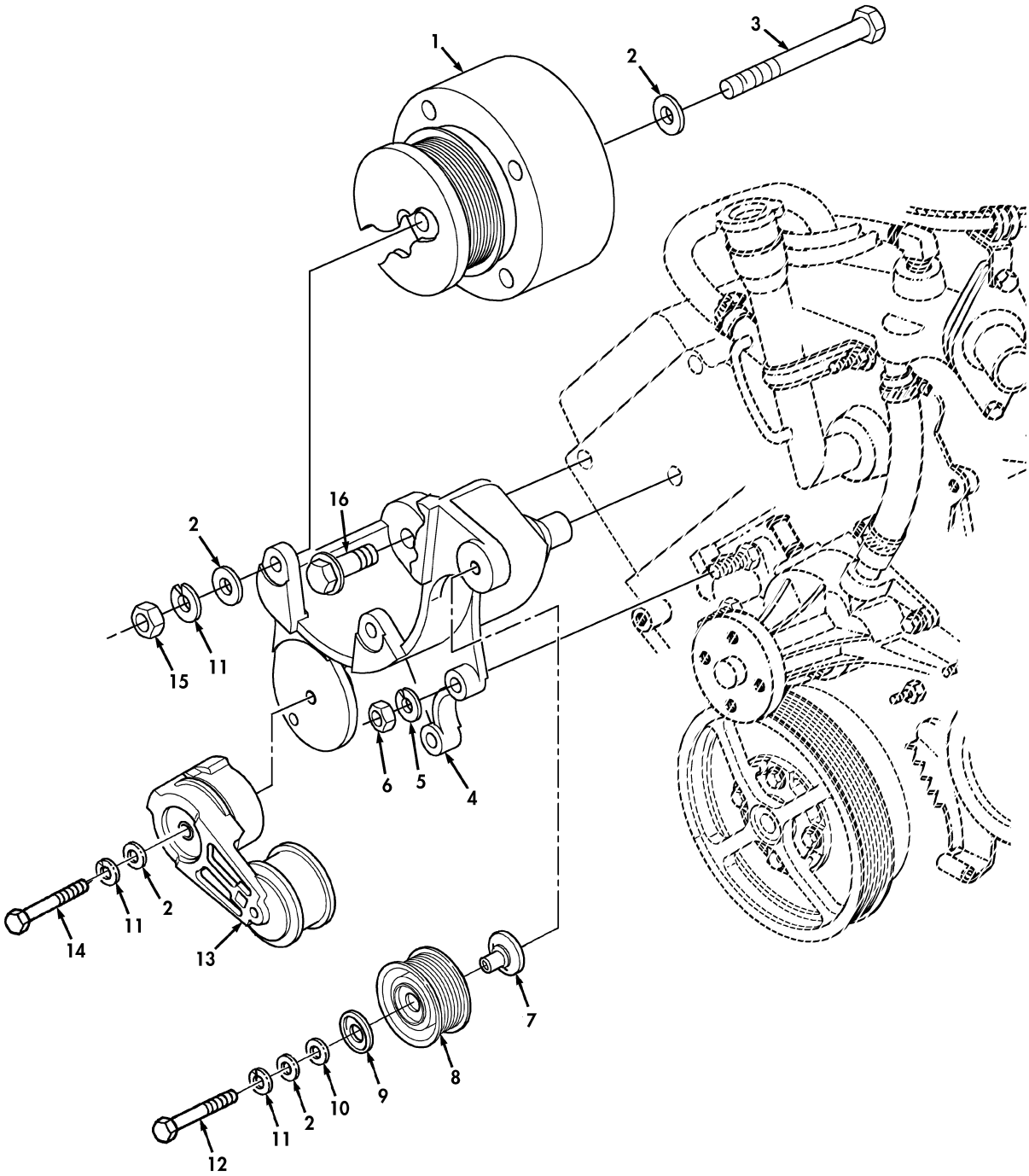

Figure 490A. A/C Compressor, Idler Pulley, Tensioner, and Related Parts (Serial Number 196901 and Above).

(1) ITEM NO	(2) SMR CODE	(3) NSN	(4) CAGEC	(5) PART NUMBER	(6) DESCRIPTION AND USABLE ON CODES(UOC)	(7) QTY
					GROUP 5203 AIR CONDITIONING COMPONENTS	
					FIG. 490A A/C COMRESSOR,IDLER PULLEY,TENSIONER,AND RELATED PARTS (SERIAL NUMBER 196901 AND ABOVE)	
* 1	PAOZZ	4310014208306	34623	RCSK17567	COMPRESSOR,AIR COND..... UOC:B15	1
* 2	PAOZZ	5310014124013	24617	2436163	WASHER,FLAT..... UOC:B15	8
* 3	PAOZZ	5305007813929	80204	B1821BH038C425N	SCREW,CAP HEXAGON H..... UOC:B15	3
* 4	PAOZZ	5340014886181	34623	12469498	BRACKET..... UOC:B15	1
* 5	PAOZZ	5310012067306	7X677	11500207	WASHER,LOCK..... UOC:B15	2
* 6	PAOZZ	5310013663539	80204	B18241B100	NUT,PLAIN,HEXAGON M10-1.5..... UOC:B15	2
* 7	PAOZZ	5365014885640	34623	12469473	SPACER,STEPPED..... UOC:B15	1
* 8	PAOZZ	3020014910776	001Y9	600635	PULLEY,GROOVE..... UOC:B15	1
* 9	PAOZZ	5340014912205	001Y9	600638	BOOT,DUST AND MOIST..... UOC:B15	1
* 10	PAOZZ	5310000120388	24617	120388	WASHER,FLAT..... UOC:B15	1
* 11	PAOZZ	5310007747293	24617	120382	WASHER,LOCK..... UOC:B15	2
* 12	PAOZZ	5305005432866	80204	B1821BH038C250N	SCREW,CAP HEXAGON H .375-16 X 2.50. UOC:B15	1
* 13	PAOZZ	2920014912011	001Y9	600637	ARM,ADJUSTING..... UOC:B15	1
* 14	PAOZZ	5305007813927	80204	B1821BH038C350N	SCREW,CAP HEXAGON H .375-16 X 3.50. UOC:B15	1
* 15	PAOZZ	5310007610654	96906	MS51967-9	NUT,PLAIN,HEXAGON .375-16..... UOC:B15	3
* 16	PAOZZ	5306012705448	19207	12340845-3	BOLT,MACHINE M10-1.5 X 45..... UOC:B15	2

END OF FIGURE

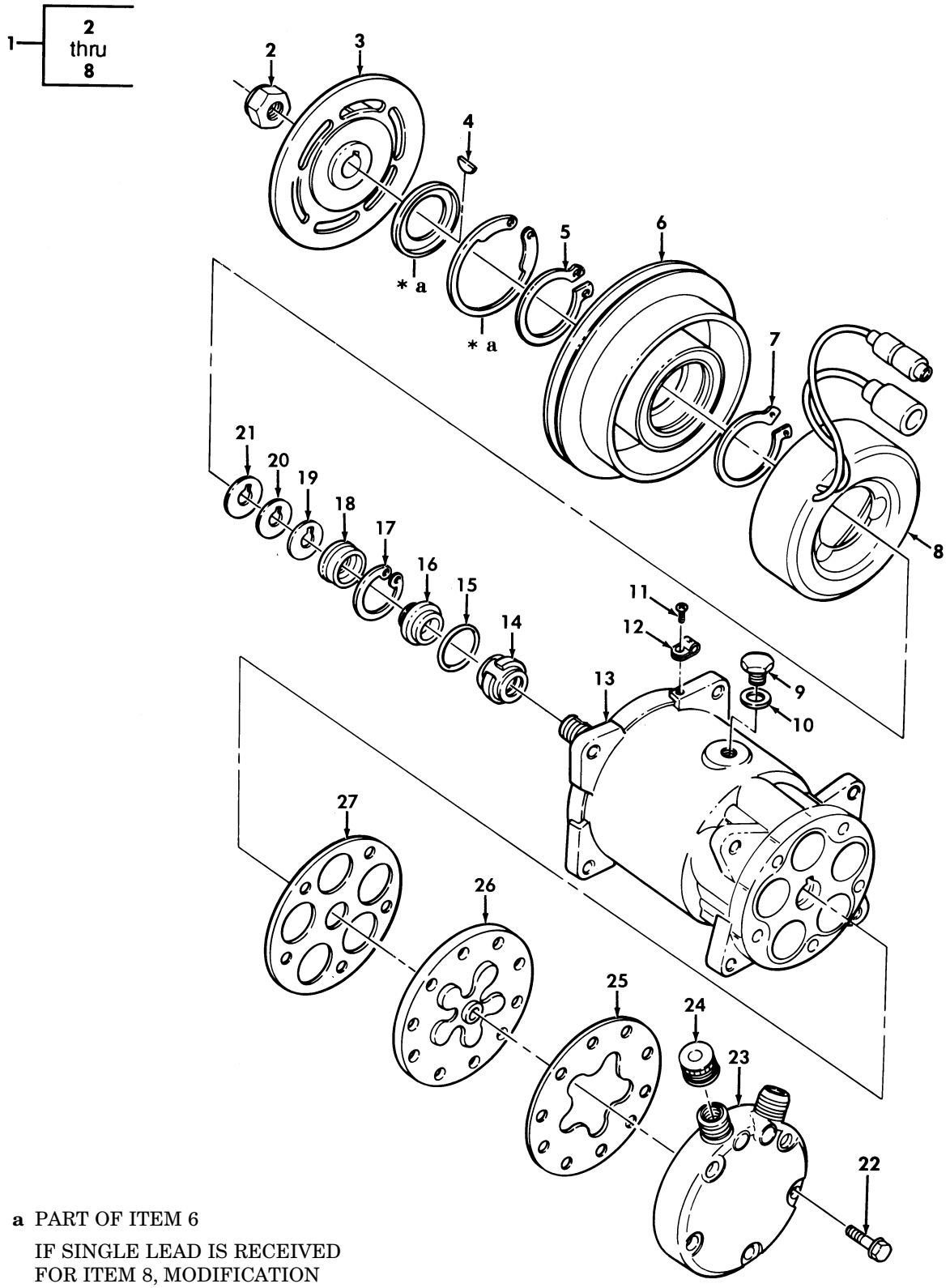

* a PART OF ITEM 6

IF SINGLE LEAD IS RECEIVED FOR ITEM 8, MODIFICATION PROCEDURES ARE AVAILABLE

Figure 491. Air Conditioner Compressor Assembly, M997 and M997A1 Ambulance.

(1) ITEM NO	(2) SMR CODE	(3) NSN	(4) CAGEC	(5) PART NUMBER	(6) DESCRIPTION AND USABLE ON CODES(UOC)	(7) QTY
					GROUP 5203 AIR CONDITIONING COMPONENTS	
					FIG. 491 AIR CONDITIONER COMPRESSOR ASSEMBLY,M997 AND M997A1 AMBULANCE	
1	PAFZZ	2520012899663	63829	9383-6010	CLUTCH ASSEMBLY,FRI..... UOC:A15,H15	1
2	KFFZZ		63829	XX1	.NUT PART OF KIT P/N 9103-9800..... UOC:A15,H15	1
3	KFFZZ		63829	X10	.PLATE PART OF KIT P/N 9140-9810.... UOC:A15,H15	1
4	KFFZZ		63829	9162-0121	.KEY,MACHINE PART OF KIT P/N 9103-9800..... UOC:A15,H15	1
5	KFFZZ		63829	XX6	.RING,SNAP PART OF KIT P/N 9103-9800 UOC:A15,H15	1
6	KFFZZ		63829	X11	.PULLEY PART OF KIT P/N 9140-9810... UOC:A15,H15	1
7	KFFZZ		63829	XX7	.RING,SNAP PART OF KIT P/N 9103-9800 UOC:A15,H15	1
8	PAFZZ	5950012896007	63829	8527-6041	.COIL,ELECTRICAL..... UOC:A15,H15	1
9	PAFZZ	5365012878645	63829	8385-6410	PLUG,MACHINE THREAD..... UOC:A15,H15	1
10	PAFZZ	5331012881062	63829	8385-0520	O-RING..... UOC:A15,H15	1
11	KFFZZ		63829	XX9	SCREW PART OF KIT P/N 9103-9800..... UOC:A15,H15	1
12	KFFZZ		63829	XX8	CLAMP PART OF KIT P/N 9103-9800..... UOC:A15,H15	1
13	XAFZZ		63829	X18	BODY..... UOC:A15,H15	1
14	KFFZZ		63829	X14	SEAL PART OF KIT P/N 5741908..... UOC:A15,H15	1
15	KFFZZ		63829	X15	SEAL PART OF KIT P/N 5741908..... UOC:A15,H15	1
16	KFFZZ		63829	X16	SEAL PART OF KIT P/N 5741908..... UOC:A15,H15	1
17	KFFZZ		63829	8385-0880	RING,RETAINING PART OF KIT P/N 5741908..... UOC:A15,H15	1
18	KFFZZ		63829	X17	RING,FELT PART OF KIT P/N 5741908... UOC:A15,H15	1
19	KFFZZ		63829	XX5	SHIM PART OF KIT P/N 9103-9800..... UOC:A15,H15	1
20	KFFZZ		63829	XX4	SHIM PART OF KIT P/N 9103-9800..... UOC:A15,H15	1
21	KFFZZ		63829	XX3	SHIM PART OF KIT P/N 9103-9800..... UOC:A15,H15	1
22	PAFZZ	5306012968600	63829	4605-0470	BOLT,ASSEMBLED WASH..... UOC:A15,H15	5
23	PAFZZ	2815012903705	63829	8476-9631	CYLINDER HEAD,DIESE.....	1

(1) ITEM NO	(2) SMR CODE	(3) NSN	(4) CAGEC	(5) PART NUMBER	(6) DESCRIPTION AND USABLE ON CODES(UOC)	(7) QTY
					UOC:A15,H15	
24	PAFZZ	5340012881242	63829	8363-6330	CAP,PROTECTIVE,DUST.....	2
					UOC:A15,H15	
25	KFFZZ		63829	X12	GASKET PART OF KIT P/N 8385-9611....	1
					UOC:A15,H15	
26	PAFZZ	4320012900748	63829	6320-9620	VALVE PLATE,HYDRAUL.....	1
					UOC:A15,H15	
27	KFFZZ		63829	X13	GASKET PART OF KIT P/N 8385-9611....	1
					UOC:A15,H15	

END OF FIGURE

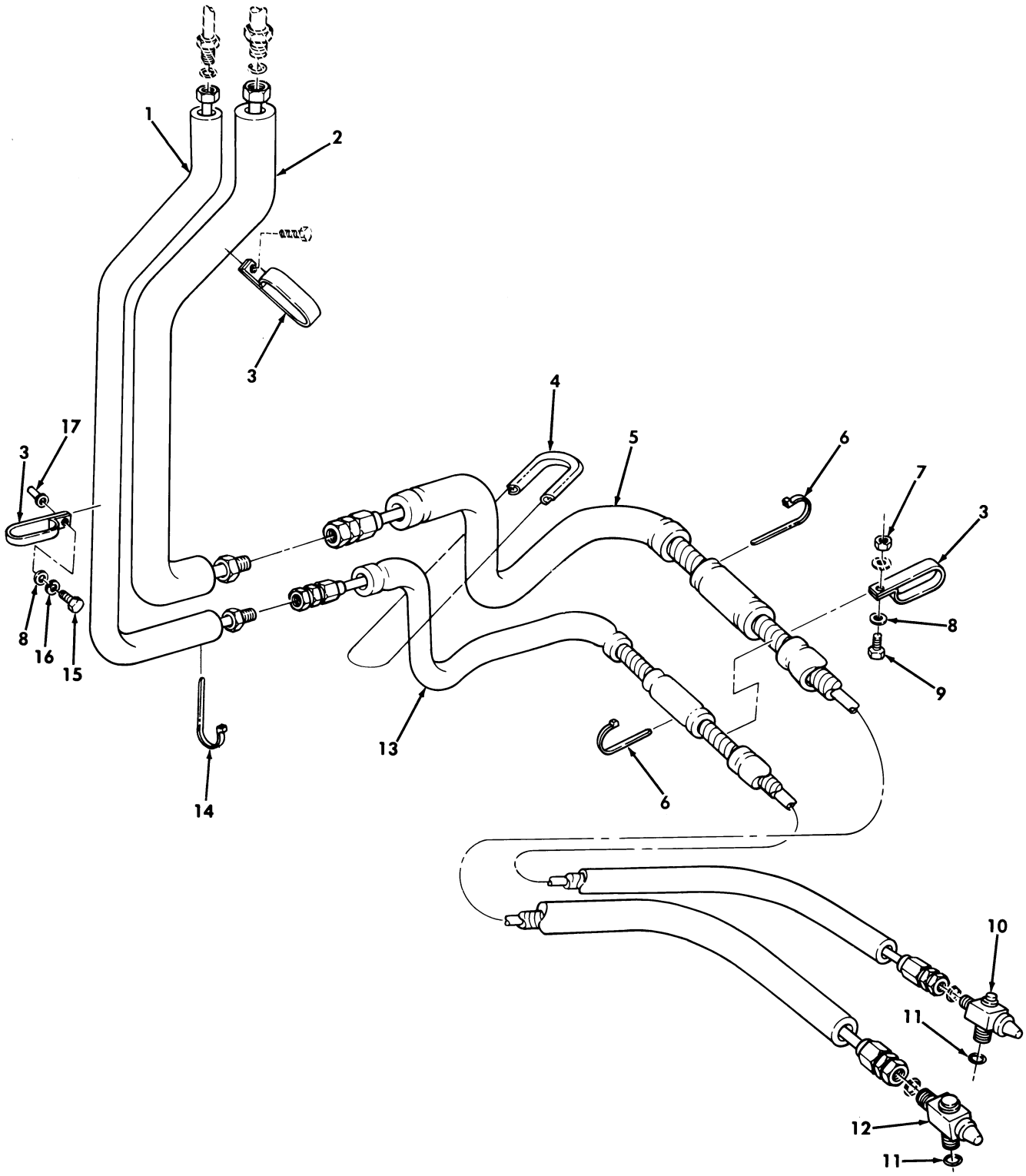

Figure 492. Air Conditioner Lines and Fittings, M997, M997A1, and M997A2 Ambulance.

(1) ITEM NO	(2) SMR CODE	(3) NSN	(4) CAGEC	(5) PART NUMBER	(6) DESCRIPTION AND USABLE ON CODES(UOC)	(7) QTY
					GROUP 5217 AIR CONDITIONING COMPONENTS	
					FIG. 492 AIR CONDITIONER LINES AND FITTINGS,M997,M997A1,AND M997A2 AMBULANCE	
1	PFFZZ	4710012653233	34623	5597935	TUBE ASSEMBLY,METAL..... UOC:A15,B15,H15	1
2	PFFZZ	4710012653232	9C234	5597929	TUBE ASSEMBLY,METAL..... UOC:A15,B15,H15	1
3	PAFZZ	5340012731721	19207	12341730	CLAMP,LOOP..... UOC:A15,B15,H15	3
13	PAOZZ	5342012728391	34623	5597872	PROTECTOR,HANDLE ED..... UOC:A15,B15,H15	1
5	PFFZZ	4720012653224	34623	12341976	HOSE ASSEMBLY,NONME..... UOC:A15,B15,H15	1
6	PAFZZ	5975001113208	96906	MS3367-5-9	STRAP,TIEDOWN,ELECT..... UOC:A15,B15,H15	2
7	PAFZZ	5310000614650	96906	MS51943-31	NUT,SELF-LOCKING,HE 1/4-20..... UOC:A15,B15,H15	1
8	PAFZZ	5310008094058	96906	MS27183-10	WASHER,FLAT 1/4..... UOC:A15,B15,H15	2
9	PAFZZ	5305000680502	96906	MS90725-6	SCREW,CAP,HEXAGON H 1/4-20 X 3/4... UOC:A15,B15,H15	1
10	PAFZZ	4820012653156	24234	404187	VALVE ASSEMBLY,DIS..... UOC:A15,B15,H15	1
11	PAFZZ	5331012658809	34623	5597916	O-RING..... UOC:A15,B15,H15	2
12	PAFZZ	4820012653159	24234	404188	VALVE ASSEMBLY,SUC..... UOC:A15,B15,H15	1
5	PFFZZ	4720012653223	9C234	5597876	HOSE ASSEMBLY,NONME..... UOC:A15,B15,H15	1
14	PAOZZ	5975010345871	96906	MS3367-7-0	STRAP,TIEDOWN,ELECT..... UOC:A15,B15,H15	3
15	PAFZZ	5305002253843	80204	B1821BH025C100N	SCREW,CAP,HEXAGON H 1/4-20 X 1.00.. UOC:A15,B15,H15	2
16	PAFZZ	5310005825965	96906	MS35338-44	WASHER,LOCK 1/4..... UOC:A15,B15,H15	2
17	PAFZZ	5310010933493	96906	MS27130-31	NUT,PLAIN,BLIND RIV 1/4-20..... UOC:A15,B15,H15	2

END OF FIGURE

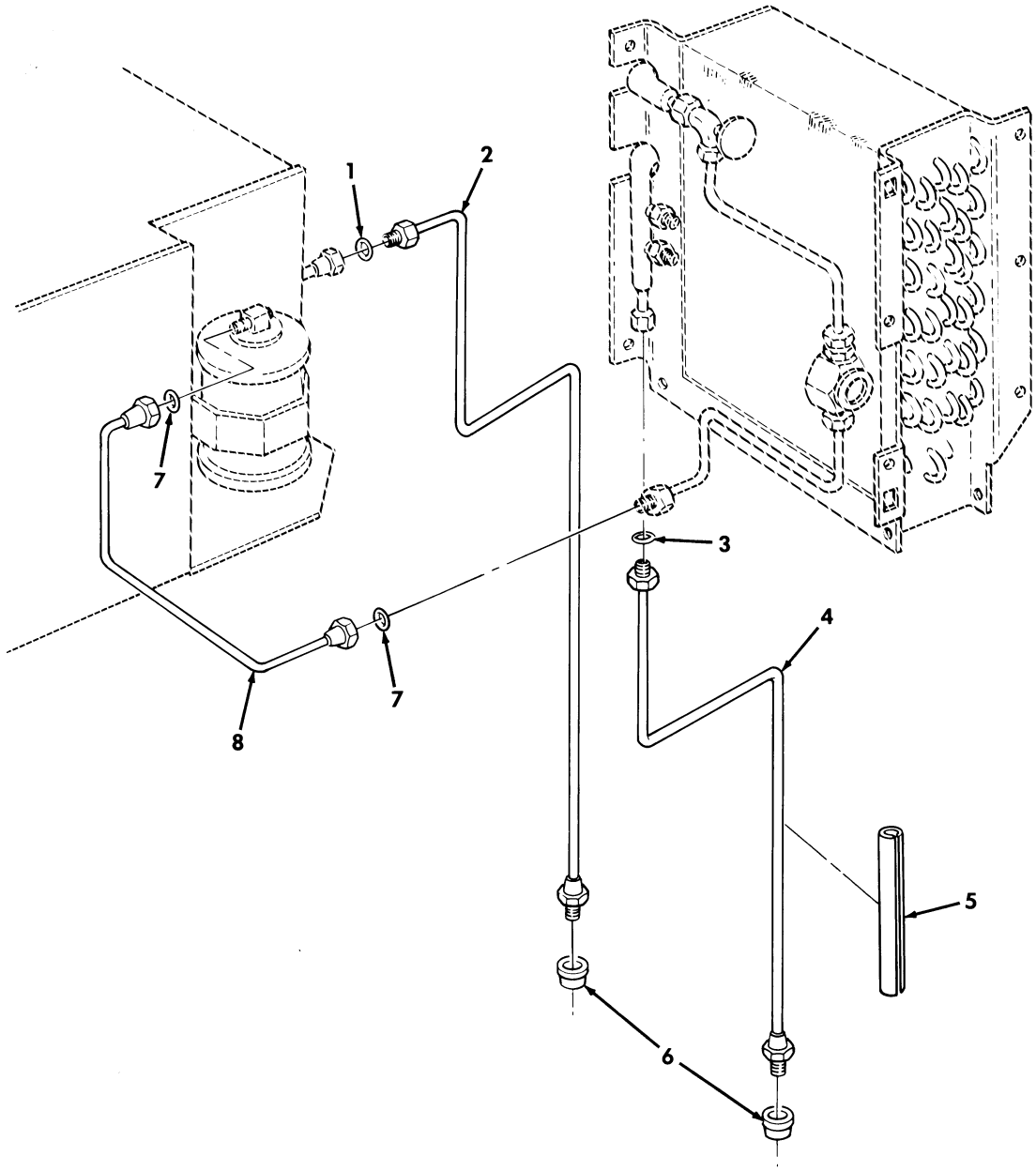

Figure 493. Air Conditioner Condenser and Evaporator Lines, M997, M997A1, and M997A2 Ambulance.

(1) ITEM NO	(2) SMR CODE	(3) NSN	(4) CAGEC	(5) PART NUMBER	(6) DESCRIPTION AND USABLE ON CODES(UOC)	(7) QTY
					GROUP 5217 AIR CONDITIONING COMPONENTS	
					FIG. 493 AIR CONDITIONER CONDENSER AND EVAPORATOR LINES,M997,M997A1, AND M997A2 AMBULANCE	
1	PAFZZ	5331011609857	24234	300442	O-RING..... UOC:A15,B15,H15	1
2	PAFZZ	4710012653277	24234	405684	TUBE AND FITTINGS,M..... UOC:A15,B15,H15	1
3	PAFZZ	5331011661712	02697	2-015C557-70	O-RING..... UOC:A15,B15,H15	1
4	PAFZZ	4710012653276	24234	405683	TUBE AND FITTINGS,M..... UOC:A15,B15,H15	1
5	PAFZZ	5640012885547	24234	300506-72.0	INSULATION SLEEVING..... UOC:A15,B15,H15	1
6	PAFZZ	5325012897859	28520	2400	GROMMET,NONMETALLIC..... UOC:A15,B15,H15	2
7	PAFZZ	5331010613000	24234	300448	O-RING..... UOC:A15,B15,H15	2
8	PAFZZ	4710012653230	24234	405682	TUBE ASSEMBLY,METAL..... UOC:A15,B15,H15	1

END OF FIGURE

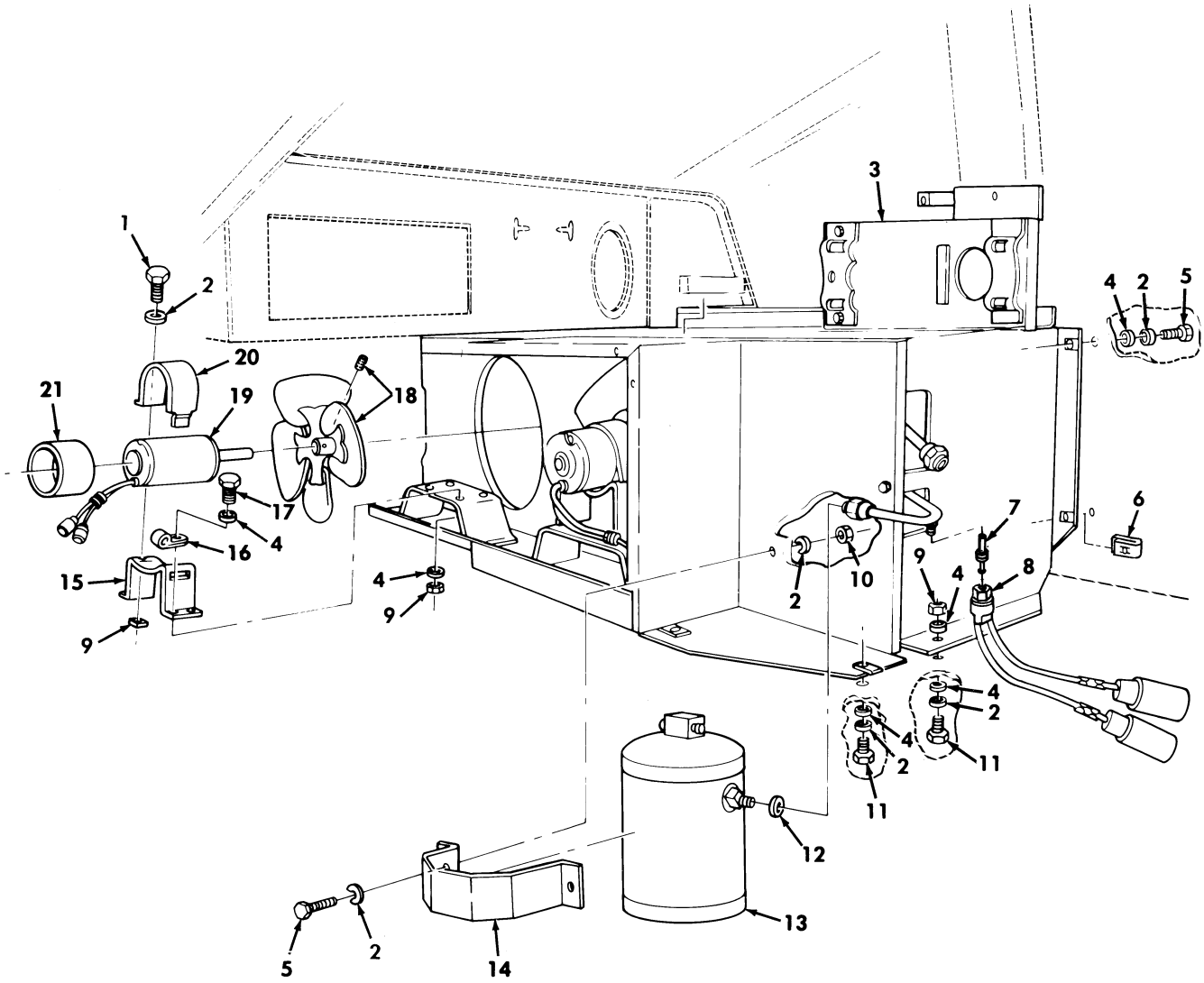

Figure 494. Heater and Air Conditioning Condenser, M997, M997A1, and M997A2 Ambulance.

(1) ITEM NO	(2) SMR CODE	(3) NSN	(4) CAGEC	(5) PART NUMBER	(6) DESCRIPTION AND USABLE ON CODES(UOC)	(7) QTY
					GROUP 5230 AIR CONDITIONING COMPONENTS	
					FIG. 494 HEATER AND AIR CONDITIONING CONDENSER,M997,M997A1,AND M997A2 AMBULANCE	
1	PAOZZ	5305012967762	24234	201686	SCREW,CAP,HEXAGON H 1/4-20 X .75... UOC:A15,B15,H15	1
2	PAOZZ	5310012702661	24234	202755	WASHER,LOCK 1/4..... UOC:A15,B15,H15	7
3	PFFZZ	4130013006350	24234	410909	CONDENSER,REFRIGERA..... UOC:A15,B15,H15	1
4	PAOZZ	5310008238804	96906	MS27183-9	WASHER,FLAT 1/4..... UOC:A15,B15,H15	10
5	PAOZZ	5305000680502	96906	MS90725-6	SCREW,CAP,HEXAGON H 1/4-20 X 3/4... UOC:A15,B15,H15	5
6	PAOZZ	5340012961736	24234	290308	CLIP,SPRING TENSION 1/4-20..... UOC:A15,B15,H15	15
7	PAFZZ	4820012653149	24234	405475	VALVE..... UOC:A15,B15,H15	1
8	PAFZZ	5930012661809	24234	404179	SWITCH,PRESSURE..... UOC:A15,H15	1
9	PAOZZ	5310012723311	34623	5741427	NUT,PLAIN,CAP 1/4-20..... UOC:A15,B15,H15	8
10	PAFZZ	5310007616882	96906	MS51967-2	NUT,PLAIN,HEXAGON 1/4-20..... UOC:A15,B15,H15	2
11	PAOZZ	5305002253843	80204	B1821BH025C100N	SCREW,CAP,HEXAGON H..... UOC:A15,B15,H15	2
12	PAFZZ	5331010613000	24234	300448	O-RING..... UOC:A15,B15,H15	1
13	PAFZZ	4130011715997	99688	585810	RECEIVER-DEHYDRATOR..... UOC:A15,H15	1
14	PAFZZ	5340012716465	24234	513395	BRACKET,MOUNTING..... UOC:A15,B15,H15	1
15	PAOZZ	5340012716466	24234	513394	BRACKET,MOUNTING..... UOC:A15,B15,H15	2
16	PAOZZ	5340012897793	24234	290309	CLAMP,LOOP..... UOC:A15,B15,H15	2
17	PAOZZ	5305012787118	24234	201685	SCREW,CAP,HEXAGON H 1/4-20 X 1-1/4. UOC:A15,B15,H15	8
18	PAOZZ	4140012697101	24234	265330	FAN,VENTILATING..... UOC:A15,B15,H15	2
19	PAOZZ	6105012658634	24234	274278	MOTOR,DIRECT CURREN..... UOC:A15,B15,H15	2
20	PAOZZ	5340012716455	24234	513396	STRAP,WEBBING..... UOC:A15,B15,H15	2
21	PAOZZ	9320010852889	99688	58701	RUBBER ROUND SECTIO..... UOC:A15,B15,H15	2

END OF FIGURE

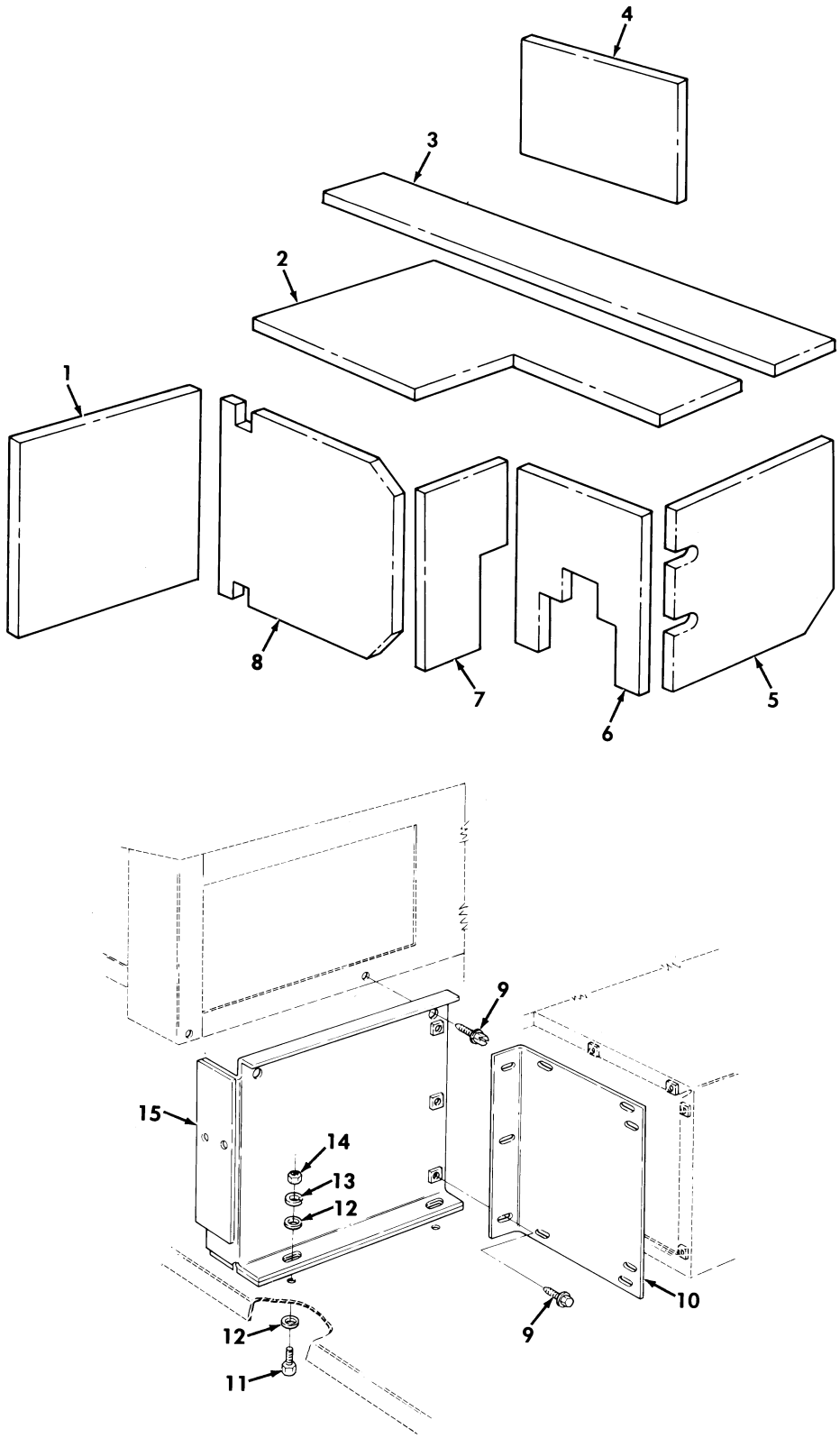

Figure 495. Heater and Air Conditioning Condenser, M997, M997A1, and M997A2 Ambulance.

(1) ITEM NO	(2) SMR CODE	(3) NSN	(4) CAGEC	(5) PART NUMBER	(6) DESCRIPTION AND USABLE ON CODES(UOC)	(7) QTY
					GROUP 5230 AIR CONDITIONING COMPONENTS	
					FIG. 495 HEATER AND AIR CONDITIONING CONDENSER,M997,M997A1,AND M997A2 AMBULANCE	
1	MOOZZ		34623	SF5598816	PANEL FRONT CLOSE OUT,MAKE FROM PAD,CUSHIONING P/N CF40BH52..... UOC:A15,B15,H15	1
2	MOOZZ		34623	SF5598242	PANEL CONDENSER,TOP,MAKE FROM PAD, CUSHIONING P/N CF40BH52..... UOC:A15,B15,H15	1
3	MOOZZ		19207	12341680	INSULATION BLANKET, CONDENSOR,TOP OUTER,MAKE FROM PAD CUSHIONING P/N CF40BH52..... UOC:A15,B15,H15	1
4	MOOZZ		34623	SF5598821	PANEL HEATER SIDE,MAKE FROM PAD, CUSHIONING P/N CF40BH52..... UOC:A15,B15,H15	1
5	MOOZZ		34623	SF5598239	PANEL CONDENSER,REAR,MAKE FROM PAD, CUSHIONING P/N CF40BH52..... UOC:A15,B15,H15	1
6	MOOZZ		34623	SF5598240	PANEL CONDENSER,SIDE,MAKE FROM PAD, CUSHIONING P/N CF40BH52..... UOC:A15,B15,H15	1
7	MOOZZ		34623	SF5598815	PANEL CONDENSER REAR,MAKE FROM PAD, CUSHIONING P/N CF40BH52..... UOC:A15,B15,H15	1
8	MOOZZ		34623	SF5598243	PANEL CONDENSER CLOSE OUT PANEL, MAKE FROM PAD,CUSHIONING P/N CF40BH52..... UOC:A15,B15,H15	1
9	PAOZZ	5305012645874	19207	12340792	SCREW,TAPPING #10-12 X .75..... UOC:A15,B15,H15	11
10	PAOZZ	4130012789837	34623	5934219	COVER,AIR CONDITION..... UOC:A15,B15,H15	1
11	PAOZZ	5305000680502	96906	MS90725-6	SCREW,CAP,HEXAGON H 1/4-20 X 3/4... UOC:A15,B15,H15	5
12	PAOZZ	5310008238804	96906	MS27183-9	WASHER,FLAT 1/4..... UOC:A15,B15,H15	10
13	PAOZZ	5310012702661	24234	202755	WASHER,LOCK..... UOC:A15,B15,H15	7
14	PAOZZ	5310007616882	96906	MS51967-2	NUT,PLAIN,HEXAGON 1/4-20..... UOC:A15,B15,H15	2
15	PAOZZ	4420012765050	24234	410925	BAFFLE,FLUID COOLER FRONT..... UOC:A15,B15,H15	1

END OF FIGURE

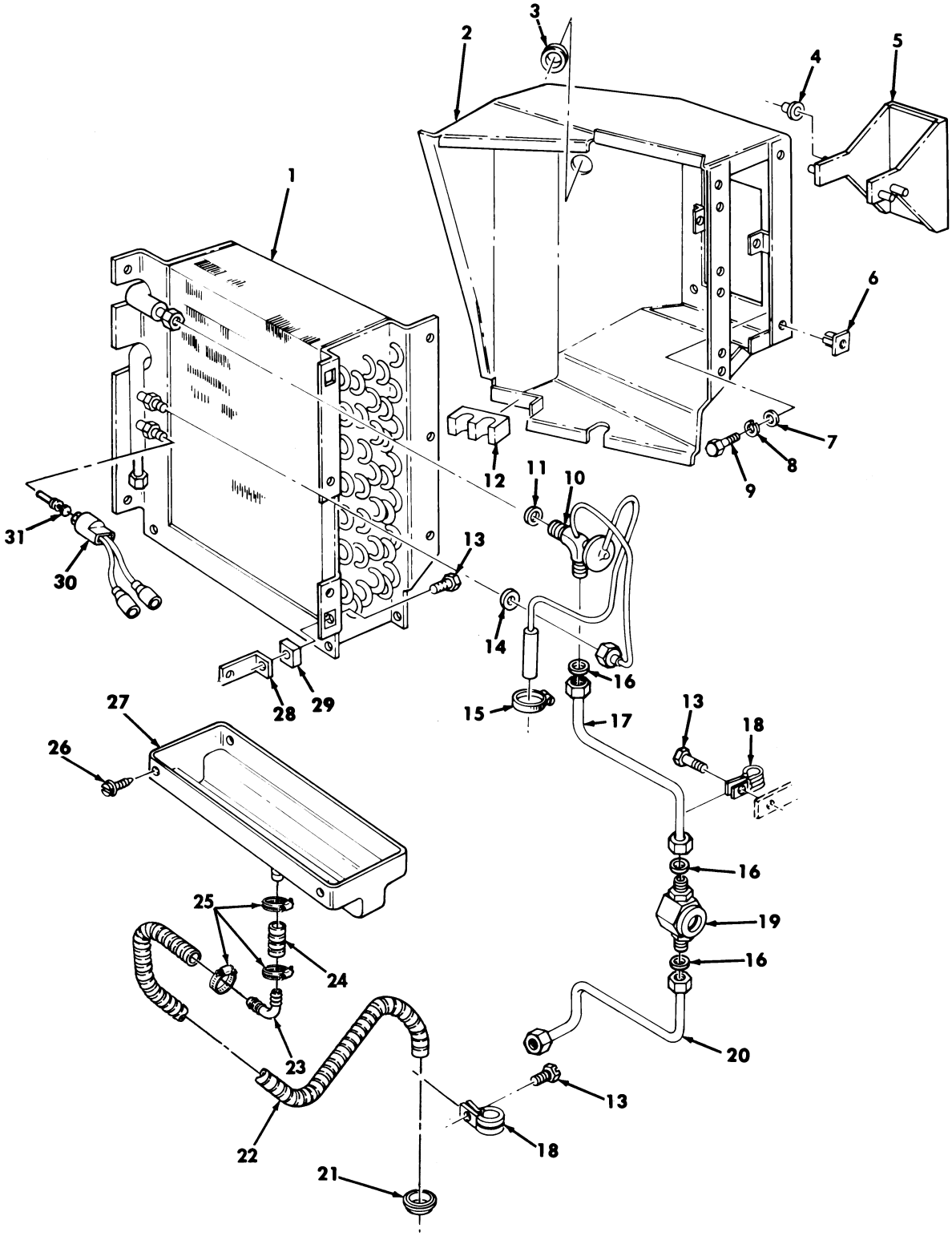

Figure 496. Air Conditioning Evaporator and Mounting Hardware, M997, M997A1, and M997A2 Ambulance

(1) ITEM NO	(2) SMR CODE	(3) NSN	(4) CAGEC	(5) PART NUMBER	(6) DESCRIPTION AND USABLE ON CODES(UOC)	(7) QTY
					GROUP 5241 AIR CONDITIONING COMPONENTS	
					FIG. 496 AIR CONDITIONING EVAPORATOR AND MOUNTING HARDWARE,M997,M997A1, AND M997A2 AMBULANCE	
1	PAFZZ	4130012658726	24234	400084	EVAPORATOR COIL,REF..... UOC:A15,H15	1
2	PFFZZ	4130012821895	24234	410917	EVAPORATOR,AIR COND..... UOC:A15,B15,H15	1
3	PAFZZ	5325002636648	96906	MS35489-135	GROMMET,NONMETALLIC..... UOC:A15,B15,H15	1
4	PAFZZ	3120012702646	24234	204434	BUSHING,SLEEVE..... UOC:A15,B15,H15	2
5	PFFZZ	5340012817795	24234	410918	COVER,ACCESS..... UOC:A15,B15,H15	1
6	PAFZZ	5310012723311	34623	5741427	NUT,PLAIN,CAP 1/4-20..... UOC:A15,B15,H15	5
7	PAFZZ	5310008238804	96906	MS27183-9	WASHER,FLAT 1/4..... UOC:A15,B15,H15	6
8	PAFZZ	5310012702661	24234	202755	WASHER,LOCK 1/4..... UOC:A15,B15,H15	6
9	PAFZZ	5305000680502	96906	MS90725-6	SCREW,CAP,HEXAGON H 1/4-20 X 3/4... UOC:A15,B15,H15	6
10	PFFZZ	4820011616435	99688	58583	VALVE,EXPANSION..... UOC:A15,H15	1
11	PAFZZ	5331011609857	24234	300442	O-RING..... UOC:A15,B15,H15	1
12	PFFZZ	5330012822214	24234	354944	SEAL,NONMETALLIC ST LOWER RIGHT.... UOC:A15,B15,H15	1
13	PAOZZ	5305000712506	80204	B1821BH025C050N	SCREW,CAP,HEXAGON H 1/4-20 X 1/2... UOC:A15,B15,H15	5
14	PAFZZ	5331001850075	28527	B2099690G1	O-RING..... UOC:A15,B15,H15	1
15	PAFZZ	4730009083193	7Z588	30024H	CLAMP,HOSE..... UOC:A15,B15,H15	1
16	PAFZZ	5331010613000	24234	300448	O-RING..... UOC:A15,B15,H15	3
17	PAFZZ	4710012653152	24234	405680	TUBE UPPER..... UOC:A15,H15	1
18	PAFZZ	5340012766738	24234	290249	CLAMP,LOOP..... UOC:A15,B15,H15	3
19	PAFZZ	6680012658698	24234	405565	INDICATOR,SIGHT,LIQ..... UOC:A15,H15	1
20	PFFZZ	4710012855123	24234	405681	TUBE ASSEMBLY,METAL LOWER..... UOC:A15,H15	1
21	PFFZZ	5325002766090	96906	MS35489-18	GROMMET,NONMETALLIC..... UOC:A15,B15,H15	1
22	PFOZZ	4720012820143	24234	300515	HOSE,NONMETALLIC .82 INCHES LONG... UOC:A15,B15,H15	1
23	PFOZZ	4730014392814	34623	12342655	ELBOW,HOSE..... UOC:A15,B15,H15	1

(1) ITEM NO	(2) SMR CODE	(3) NSN	(4) CAGEC	(5) PART NUMBER	(6) DESCRIPTION AND USABLE ON CODES(UOC)	(7) QTY
24	PFOZZ	4720012820160	24234	405695	HOSE ASSEMBLY,DRAIN..... UOC:A15,B15,H15	1
25	PAOZZ	4730002302959	24234	290227	CLAMP,HOSE..... UOC:A15,B15,H15	3
26	PAOZZ	5305012705419	24234	200335	SCREW,TAPPING,THREA..... UOC:A15,B15,H15	4
27	PAFZZ	4130012694921	24234	410920	PAN,TRUCK..... UOC:A15,B15,H15	1
28	PFOZZ	5340012716467	24234	513438	BRACKET,MOUNTING..... UOC:A15,B15,H15	2
29	XBOZZ		24234	204531	SPACER,SLEEVE..... UOC:A15,B15,H15	2
30	PAFZZ	5930012663917	24234	404180	SWITCH,PRESSURE..... UOC:A15,B15,H15	1
31	PAFZZ	4820012653149	24234	405475	VALVE..... UOC:A15,B15,H15	1

END OF FIGURE

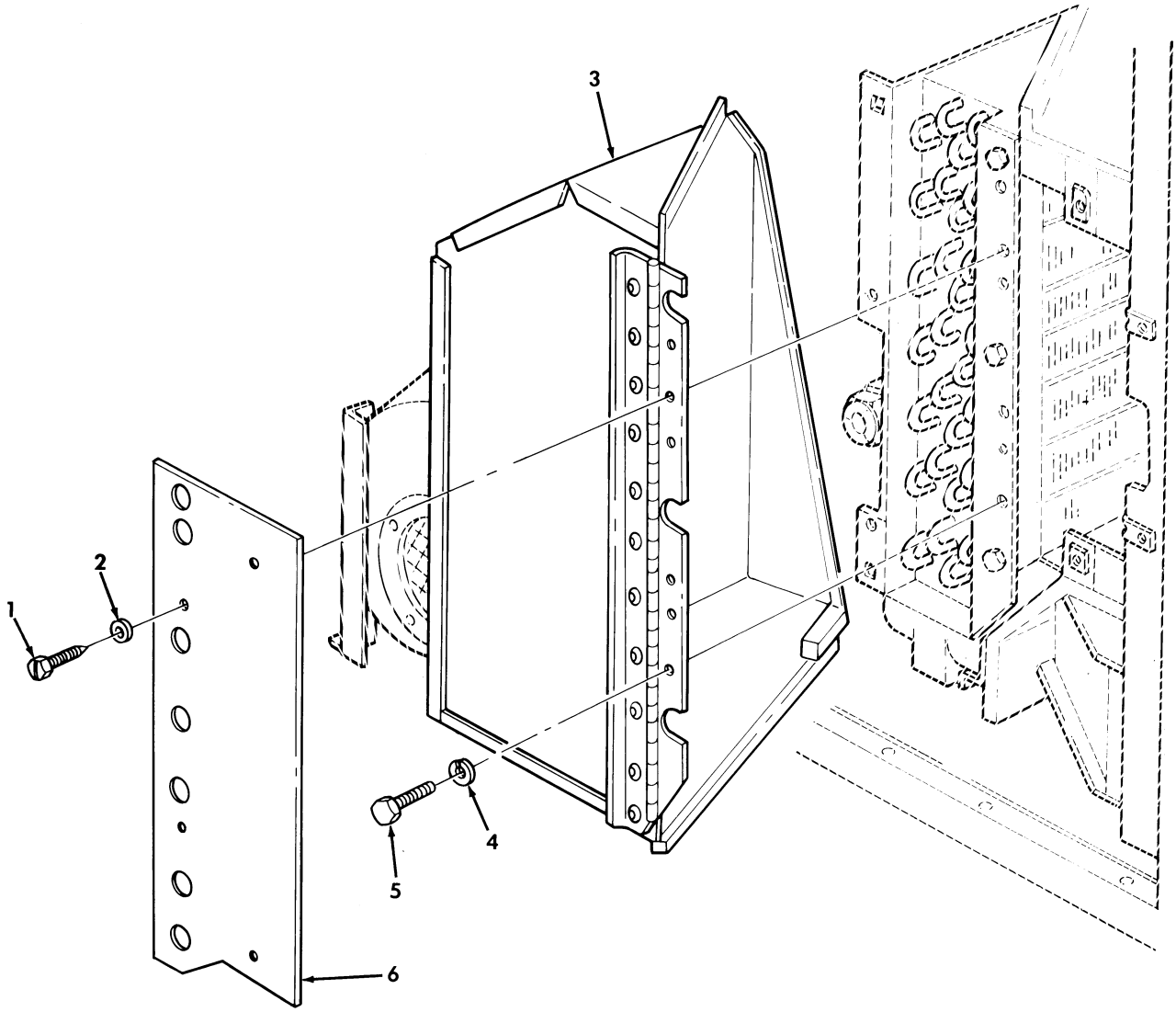

Figure 497. Evaporator Blower Motor Assembly Covers, M997, M997A1, and M997A2 Ambulance.

(1) ITEM NO	(2) SMR CODE	(3) NSN	(4) CAGEC	(5) PART NUMBER	(6) DESCRIPTION AND USABLE ON CODES(UOC)	(7) QTY
					GROUP 5243 AIR CONDITIONING	
					FIG. 497 EVAPORATOR BLOWER MOTOR ASSEMBLY COVERS,M997,M997A1,AND M997A2 AMBULANCE	
1	PAOZZ	5305012542460	34623	5592840	SCREW,TAPPING,THREA #10-16 X 1/2... UOC:A15,B15,H15	4
2	PAOZZ	5310002748710	24234	202751	WASHER,LOCK #10..... UOC:A15,B15,H15	4
3	PAOZZ	5340014395636	34623	5598293	COVER,ACCESS..... UOC:A15,B15,H15	1
4	PAOZZ	5310008094058	96906	MS27183-10	WASHER,FLAT 1/4..... UOC:A15,B15,H15	6
5	PAOZZ	5305000680502	96906	MS90725-6	SCREW,CAP,HEXAGON H 1/4-20 X 3/4... UOC:A15,B15,H15	6
6	XBOZZ		34623	5598307	COVER PLATE..... UOC:A15,B15,H15	1

END OF FIGURE

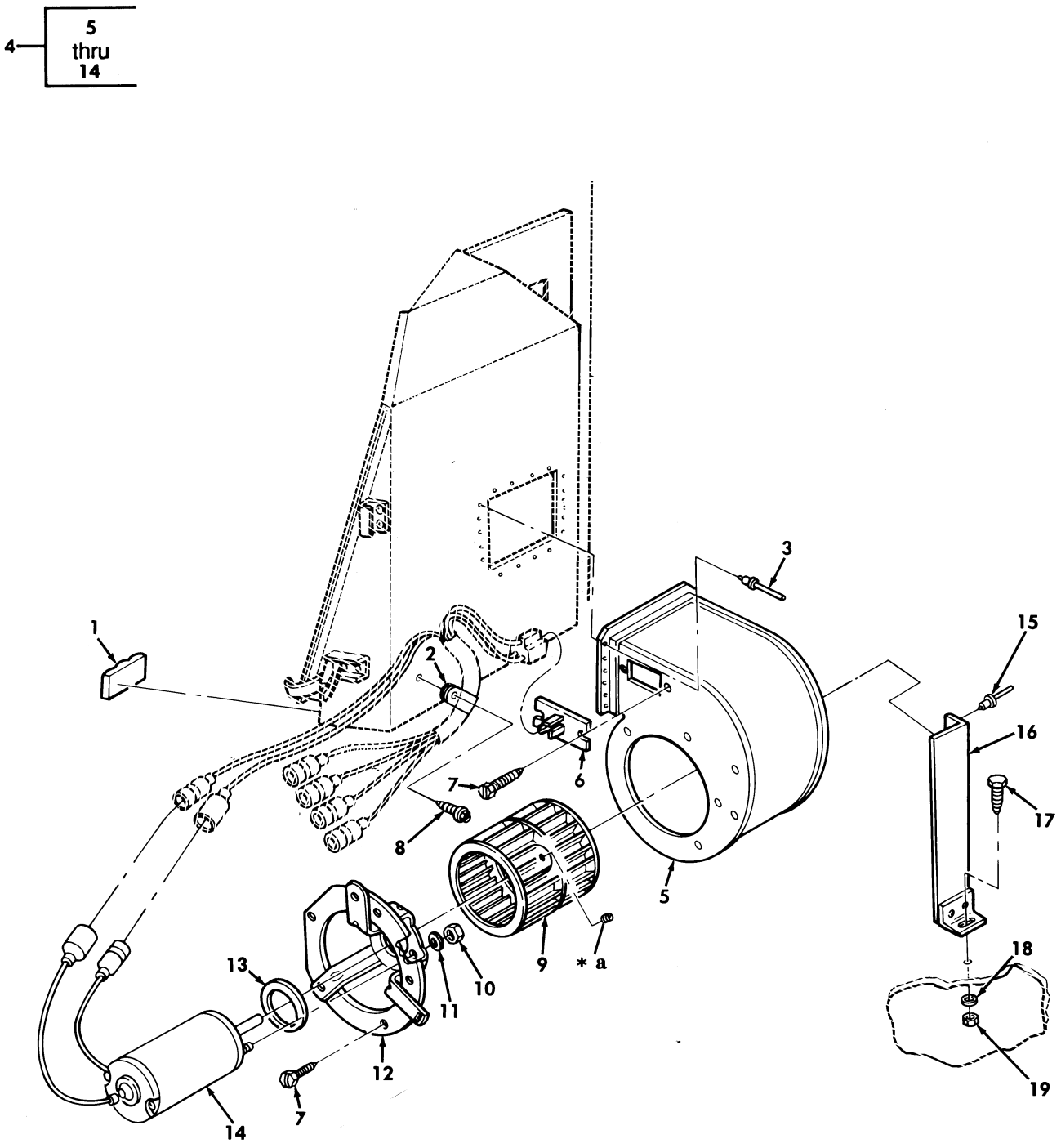

* a PART OF ITEM 9

Figure 498. Evaporator Blower Motor Assembly, M997, M997A1, and M997A2 Ambulance.

(1) ITEM NO	(2) SMR CODE	(3) NSN	(4) CAGEC	(5) PART NUMBER	(6) DESCRIPTION AND USABLE ON CODES(UOC)	(7) QTY
					GROUP 5243 AIR CONDITIONING	
					FIG. 498 EVAPORATOR BLOWER MOTOR ASSEMBLY,M997,M997A1,AND M997A2 AMBULANCE	
1	PFOZZ	5330012822214	24234	354944	SEAL,NONMETALLIC ST..... UOC:A15,B15,H15	1
2	PAOZZ	5340012820469	24234	290101	CLIP,SPRING TENSION..... UOC:A15,B15,H15	1
3	PAOZZ	5320001196823	80205	MS20470B4-4	RIVET,SOLID..... UOC:A15,B15,H15	18
4	PFOOO	2540012856066	24234	410921	BLOWER ASSEMBLY,AIR..... UOC:A15,B15,H15	1
5	XAOZZ		24234	513450	.HOUSING BLOWER..... UOC:A15,B15,H15	1
6	PAOZZ	5905011542354	99688	65158	.RESISTOR ASSEMBLY..... UOC:A15,B15,H15	1
7	PAOZZ	5305012705419	24234	200335	.SCREW,TAPPING,THREA #10-16 X 1/2.. UOC:A15,B15,H15	7
8	PAOZZ	5305000680508	80204	B1821BH025C075N	.SCREW,CAP,HEXAGON H 1/4-20 X 3/4.. UOC:A15,B15,H15	1
9	PFOZZ	2930012822524	24234	260790	.HUB,FAN CLUTCH..... UOC:A15,B15,H15	1
10	PAOZZ	5310008528593	96906	MS35649-103	.NUT,PLAIN,HEXAGON #10-32..... UOC:A15,B15,H15	2
11	PAOZZ	5310002748710	24234	202751	.WASHER,LOCK #10..... UOC:A15,B15,H15	2
12	PFOZZ	5340012817798	24234	513431	.BRACKET,MOUNTING..... UOC:A15,B15,H15	1
13	PFOZZ	5330012822208	24234	354674	.GASKET..... UOC:A15,B15,H15	1
14	PAOZZ	6105012658634	24234	274278	.MOTOR,DIRECT CURREN..... UOC:A15,B15,H15	1
15	PAOZZ	5320008658994	81349	M24243/1-D404	RIVET,BLIND..... UOC:A15,B15,H15	2
16	PAOZZ	5340012893228	24234	514277	BRACKET,ANGLE..... UOC:A15,B15,H15	1
17	PAOZZ	5305000680502	96906	MS90725-6	SCREW,CAP,HEXAGON H 1/4-20 X .75... UOC:A15,B15,H15	1
18	PAOZZ	5310005825965	96906	MS35338-44	WASHER,LOCK 1/4..... UOC:A15,B15,H15	1
19	PAOZZ	4931012028692	19207	12339998-13	PLUSNUT 1/4-20..... UOC:A15,B15,H15	1

END OF FIGURE

(1) ITEM NO	(2) SMR CODE	(3) NSN	(4) CAGEC	(5) PART NUMBER	(6) DESCRIPTION AND USABLE ON CODES(UOC)	(7) QTY
					GROUP 94 KITS	
					9401 REPAIR PARTS KITS	
					FIG. KITS	
1	PAFZZ	2920012058605	68505	AMA-1046AS	PARTS KIT,ENGINE GE POSITIVE HEAT..	1
					UOC:A11,A13,A14,A20,A24,A25,A26,A27, B17,B18,H11,H13,H14,H17,H18,H20,H21, H24,H25,H26,H27,H28,MMM	
					INSULATOR,PLATE (1) 43-28	
					RECTIFIER,HEAT (1) 43-29	
2	PAFZZ	2920000095213	19728	AMA-19S	PARTS KIT,BRUSH SPR ALTERNATOR.....	1
					UOC:A11,A13,A14,A20,A24,A25,A26,A27, B17,B18,H11,H13,H14,H17,H18,H20,H21, H24,H25,H26,H27,H28,MMM	
					SPRING (2) 43-43	
3	PAOZZ	2910012184489	53964	A630003	PARTS KIT,FILTER.....	1
					BOLT (3) 19-3	
					WASHER (3) 19-4	
4	PAOZZ	2530012063874	33116	A98-09439	PARTS KIT,HAND BRAK.....	1
					UOC:H11,H13,H14,H17,H18,H24,H25,H26, H27,MMM	
					DISC,BRAKE (2) 156-8	
					SPRING,HELICAL,EXTE(2) 156-4	
5	PAOZZ	4330011903579	53964	A910044	FILTER ELEMENT,FLUI.....	1
					FILTER ELEMENT,FLUI(1) 19-7	
					O-RING (1) 19-8	
6	PAFZZ	4520002013474	78385	G704424	BURNER ASSEMBLY SPACE HEATER.....	1
					UOC:A15,B15,H15	
					BOLT,HOOK (2) 348-22	
					BURNER ASSEMBLY (1) 348-35	
					CLAMP,RIM CLENCHING(4) 348-23	
					GASKET (1) 348-20	
					O-RING (1) 348-21	
					NUT,PLAIN,HEXAGON (4) 348-3	
7	PAFZZ	4520012847099	78385	G706055	BURNER ASSEMBLY SPACE HEATER.....	1
					UOC:A15,B15,H15	
					BOLT,HOOK (2) 348-22	
					BURNER ASSEMBLY (1) 348-35	
					CLAMP,RIM CLENCHING(4) 348-23	
					GASKET (1) 348-20	
					O-RING (1) 348-21	
8	PAFZZ	5977011894988	24975	MFJ-2012BS	BRUSH SET,ELECTRICA STARTER MOTOR..	1
					BRUSH STARTER MOTOR(4) 45-46	
9	PAFZZ	5360011907234	68505	MFY-19S	SPRING SET GENERATOR.....	1
					SPRING BRUSH (4) 45-48	
* 10	PAFZZ	2530014208025	34623	RCSK17215	BRAKE SHOE SET.....	1
					UOC:BVY,B15,B20,B24,B25,C17,NNN	
					DISK,BRAKE SHOE (4) 157-16	
					DISK,BRAKE SHOE (4) 158-11	
11	PAFZZ	2920011924474	68505	SAT-1004FS	PARTS KIT,ENGINE GE GENERATOR.....	1
					COVER AND CONTACT (1) 45-31	
					GASKET (1) 45-32	

(1) ITEM NO	(2) SMR CODE	(3) NSN	(4) CAGEC	(5) PART NUMBER	(6) DESCRIPTION AND USABLE ON CODES(UOC)	(7) QTY
12	PAFZZ	5977000083338	76468	01-05479	BRUSH SET,ELECTRICA.....	1
					UOC:A11,A13,A14,A20,A24,A25,A26,A27,	
					B17,B18,H11,H13,H14,H17,H18,H20,H21,	
					H24,H25,H26,H27,H28,MMM	
					BRUSH (2) 43-44	
13	PAOZZ	2520007227074	81221	1-0153	PARTS KIT,UNIVERSAL.....	1
					UOC:H11,H13,H14,H15,H16,H17,H18,H20,	
					H21,H24,H25,H26,H27,H28,MMM	
					BEARING RACE (4) 136-7	
					BEARING RACE (4) 136-20	
					CROSS ASSEMBLY (1) 136-8	
					CROSS ASSEMBLY (1) 136-21	
					RING,RETAINING (4) 136-10	
					RING,RETAINING (4) 136-23	
* 14	PAFZZ	2530011797511	34281	104870-01	PARTS KIT,BRAKE CAL SERVICE BRAKE..	1
					BOOT,DUST,MOIST (1) 158-10	
					GASKET (1) 158-8	
15	KFOZZ	4330011216350	11862	12337210	PARTS KIT,FLUID PRE OIL FILTER.....	1
					UOC:AVY,A11,A13,A14,A15,A20,A24,A25,	
					A26,A27,B16,B17,B18,HVY,H11,H13,H14,	
					H15,H16,H17,H18,H20,H21,H24,H25,H26,	
					H27,H28,MMM	
					GASKET (1) 104-7	
					PARTS KIT,FLUID PRE(1) 104-6	
					SEAL (1) 104-15	
* 16	PAOZZ	2530014599492	62828	2390077	PARTS KIT,AXLE,VEHI PLUNGE JOINT...	1
					UOC:BVY,B15,B20,B24,B25,C17,NNN	
					INSERT (1) 139-12	
					INSERT (1) 146-12	
					JOINT,PLUNGE (1) 139-13	
					JOINT,PLUNGE (1) 146-13	
					RING,RETAINING (2) 139-6	
					RING,RETAINING (2) 146-6	
					RING,SPACER (2) 139-5	
					RING,SPACER (2) 146-5	
					SPIDER ASSEMBLY (1) 139-11	
					SPIDER ASSEMBLY (1) 146-11	
18	PAHZZ	4820014748911	7X677	24200418	PARTS KIT,PRESSURE.....	1
					UOC:BVY,B15,B20,B24,B25,C17,NNN	
					PIN (1) 117-1	
					PISTON (1) 117-4	
					SEAL RING,METAL (1) 117-3	
					WASHER,SLOTTED (1) 117-2	
* 19	PAHZZ	2520014595454	7X677	24200789	PARTS KIT,TRANSMISS 4TH CLUTCH	1
					HOUSING.....	
					UOC:BVY,B15,B20,B24,B25,C17,NNN	
					BOLT,MACHINE (1) 105-12	
					HOUSING,FRICTION CL(1) 115-24	
* 20	PAHZZ	5330014107229	7X677	24202111	PARTS KIT,SEAL REPL 1995,96.....	1
					UOC:BVY,B15,B20,B24,B25,C17,NNN	
					BOLT,MACHINE (7) 122-1	
					FILTER,FORCE FEED (1) 119-1	
					GASKET (1) 108-7	

(1) ITEM NO	(2) SMR CODE	(3) NSN	(4) CAGEC	(5) PART NUMBER	(6) DESCRIPTION AND USABLE ON CODES(UOC)	(7) QTY
					GASKET (1) 116-10	
					GASKET (1) 117-15	
					GASKET (1) 117-18	
					GASKET (1) 120-8	
					GASKET (1) 120-10	
					GASKET (1) 120-25	
					GASKET (1) 122-30	
					PARTS KIT,HYDRAULIC(1) 105-15	
					SEAL,PLAIN (1) 122-4	
					SEAL,PLAIN,ENCASED (1) 105-14	
*	21	PAHZZ	2520014854280	7X677 24204278	PAN KIT,HYDRUALIC 1997,98,99,00,01.	1
					UOC:BVY,B15,B20,B24,B25,C17,NNN	
					GASKET (1) 105-20	
					MAGNET,CLIP,COLLECT(1) 105-16	
					PAN,TRANSMISSION (1) 105-18	
					PLUG,DRAIN (1) 105-21	
*21A		PAHZZ	5330010865457	7X677 24204440	PARTS KIT,SEAL REPL TRANSMISSION	1
					OVERHUAL.....	
					UOC:AVY,A11,A13,A14,A15,A20,A24,A25,	
					A26,A27,B16,B17,B18,HVY,H11,H13,H14,	
					H15,H16,H17,H18,H20,H21,H24,H25,H26,	
					H27,H28,MMM	
					BOLT,MACHINE (6) 121-21	
					DISK,CLUTCH (6) 109-3	
					DISK,CLUTCH (5) 111-16	
					DISK,CLUTCH,VEHICUL(3) 113-4	
					FILTER,FLUID (1) 104-6	
					GASKET (1) 100-10	
					GASKET (1) 104-7	
					GASKET (1) 116-10	
					GASKET (1) 116-16	
					GASKET (1) 116-20	
					GASKET (1) 118-1	
					GASKET (1) 118-1	
					GASKET (1) 118-13	
					GASKET (1) 118-13	
					GASKET (1) 121-19	
					RETAINER,PACKING (1) 100-2	
					RETAINER,PACKING (1) 100-5	
					RETAINER,PACKING (4) 113-12	
					RETAINER,PACKING (2) 121-18	
					SEAL,CENTER (1) 109-18	
					SEAL,CENTER (1) 111-3	
					SEAL,INNER (1) 109-8	
					SEAL,INNER (1) 111-5	
					SEAL,INNER (1) 113-14	
					SEAL,NONMETALLIC RO(1) 104-15	
					SEAL,OUTER (1) 109-19	
					SEAL,OUTER (1) 111-4	
					SEAL,OUTER (1) 113-13	
					SEAL,PLAIN ENCASED (1) 121-2	
					SEAL,PLAIN ENCASED (1) 121-22	
					SEAL RING,METAL (1) 116-1	

(1) ITEM NO	(2) SMR CODE	(3) NSN	(4) CAGEC	(5) PART NUMBER	(6) DESCRIPTION AND USABLE ON CODES(UOC)	(7) QTY
* 22	PAHZZ	5330013983724	7X677	24204441	KIT,TRANSMISSION 1995,OVERHAUL.....	1
					UOC:BVY,B15,B20,B24,B25,C17,NNN	
					BOLT,MACHINE (1) 105-12	
					BOLT,MACHINE (1) 105-13	
					BOLT,MACHINE (7) 122-1	
					DISC,CLUTCH (5) 110-3	
					DISK,CLUTCH (5) 112-16	
					DISK,CLUTCH (4) 114-8	
					DISK,CLUTCH (3) 115-18	
					DISK,CLUTCH (4) 115-20	
					FILTER,FORCE FEED (1) 119-1	
					GASKET (1) 108-7	
					GASKET (1) 117-18	
					GASKET (1) 117-15	
					GASKET (1) 120-8	
					GASKET (1) 120-10	
					GASKET (1) 120-25	
					O-RING (1) 115-22	
					O-RING (1) 115-26	
					O-RING (2) 122-32	
					PACKING,PREFORMED (1) 114-13	
					PACKING,PREFORMED (1) 114-14	
					PARTS KIT,HYDRAULIC(1) 105-15	
					RETAINER,PACKING (4) 114-15	
					RING,SEAL,METAL (1) 117-3	
					SEAL,DIRECT CLUTCH (1) 110-5	
					SEAL,INNER (1) 112-4	
					SEAL,INNER (1) 112-5	
					SEAL,OUTER (1) 112-6	
					SEAL,PISTIN,INNER (1) 110-7	
					SEAL,PISTON,OUTER (1) 110-6	
					SEAL,PLAIN (1) 105-7	
					SEAL,PLAIN (2) 115-4	
					SEAL,PLAIN (1) 122-4	
					SEAL,PLAIN,ENCASED (1) 105-14	
					SEAL,PLAIN,ENCASED (2) 115-1	
23	PAHZZ		7X677	24204449	PARTS KIT,PISTON.....	1
					UOC:BVY,B15,B20,B24,B25,C17,NNN	
					PACKING,PREFORMED (1) 114-13	
					PACKING,PREFORMED (1) 114-14	
24	PAFZZ	1005000499324	7X677	24204472	VERNIER ASSEMBLY.....	1
					UOC:BVY,B15,B20,B24,B25,C17,NNN	
					LEVER,REMOTE (1) 108-5	
					SHAFT (1) 108-6	
25	PAHZZ	3040014621286	7X677	24205250	PISTON,LINEAR ACTUA 1996,97,98.....	1
					UOC:BVY,B15,B20,B24,B25,C17,NNN	
					PISTON (1) 117-12	
					RING,OIL SEAL (1) 117-11	
					RING,OIL SEAL (1) 117-14	
* 26	PAHZZ	5330014422874	7X677	24205251	PARTS KIT,SEAL REPL 1995,96	1
					OVERHAUL.....	
					UOC:BVY,B15,B20,B24,B25,C17,NNN	
					BOLT,MACHINE (1) 105-12	

(1) ITEM NO	(2) SMR CODE	(3) NSN	(4) CAGEC	(5) PART NUMBER	(6) DESCRIPTION AND USABLE ON CODES(UOC)	(7) QTY
					BOLT,MACHINE (1) 105-13	
					BOLT,MACHINE (7) 122-1	
					DISK,CLUTCH (6) 109-3	
					DISK,CLUTCH (5) 110-3	
					DISK,CLUTCH (5) 112-16	
					DISK,CLUTCH (1) 114-8	
					DISK,CLUTCH (3) 115-18	
					DISK,CLUTCH (4) 115-20	
					FILTER,ELEMENT (1) 119-1	
					GASKET (1) 108-7	
					GASKET (1) 116-10	
					GASKET (1) 117-15	
					GASKET (1) 117-18	
					GASKET (1) 120-8	
					GASKET (1) 120-25	
					GASKET (1) 122-30	
					O-RING (1) 115-22	
					O-RING (1) 115-26	
					O-RING (2) 122-32	
					PACKING,PREFORMED (1) 114-13	
					PACKING,PREFORMED (1) 114-14	
					PARTS KIT,HYDRAULIC(1) 105-15	
					RETAINER,PACKING (4) 114-15	
					SEAL,DIRECT CLUTCH (1) 110-5	
					SEAL,INNER (1) 112-4	
					SEAL,INNER (1) 112-5	
					SEAL,OUTER (1) 112-6	
					SEAL,PISTON,INNER (1) 110-7	
					SEAL,PISTON,OUTER (1) 110-6	
					SEAL,PLAIN (1) 105-7	
					SEAL,PLAIN (2) 115-4	
					SEAL,PLAIN,ENCASED (1) 105-14	
					SEAL,PLAIN,ENCASED (2) 115-1	
					SEAL,RING,METAL (1) 116-1	
					SEAL,RING,METAL (1) 117-3	
27	PAHZZ	2520014608301	7X677	24205348	PARTS KIT,MECHANICAL 1996.....	1
					UOC:BVY,B15,B20,B24,B25,C17,NNN	
					BEARING,CLUTCH (1) 114-12	
					SUPPORT (1) 114-17	
28	PAHZZ	2520011497861	7X677	24205551	CARRIER ASSEMBLY,TR 1995,96.....	1
					UOC:BVY,B15,B20,B24,B25,C17,NNN	
					CARRIER ASSEMBLY (1) 107-9	
					ROLLER ASSEMBLY (1) 107-2	
* 29	PAHZZ	2520014747051	7X677	24205552	TRANSMISSION,HYDRAU 1997,98,99,00,	1
					01.....	
					UOC:BVY,B15,B20,B24,B25,C17,NNN	
					CARRIER ASSEMBLY (1) 107-9	
					ROLLER ASSEMBLY (1) 107-2	
* 30	PAHZZ	5340014088525	7X677	24206749	SEAT,HELICAL COMPRE ACCUMULATOR	1
					SEAL AND PISTON KIT.....	
					UOC:BVY,B15,B20,B24,B25,C17,NNN	
					PACKING,PREFORMED (1) 120-4	
					PACKING,PREFORMED (2) 120-6	

(1) ITEM NO	(2) SMR CODE	(3) NSN	(4) CAGEC	(5) PART NUMBER	(6) DESCRIPTION AND USABLE ON CODES(UOC)	(7) QTY
					PIN,STRAIGHT,HEADLE(1) 120-24	
					PISTON (1) 120-23	
					RING,RETAINING (2) 120-2	
* 31	PAHZZ	3110014784266	7X677	24208848	BALL,BEARING 1997,98,99,00,01.....	1
					UOC:BVY,B15,B20,B24,B25,C17,NNN	
					BEARING,NEEDLE (1) 107-11	
					RACE,BEARING (1) 107-10	
					RACE,BEARING (1) 107-12	
* 32	PAHZZ	2520014818460	7X677	24208849	PARTS KIT,CLUTCH DI 1997,98.....	1
					UOC:BVY,B15,B20,B24,B25,C17,NNN	
					BOLT,MACHINE (1) 105-12	
					SEAL (1) 114-16	
					SUPPORT (1) 114-17	
* 33	PAHZZ	3010014807597	7X677	24210954	PARTS KIT,MECHANICA 1997,98,99,00,	1
					01.....	
					UOC:BVY,B15,B20,B24,B25,C17,NNN	
					BOLT,MACHINE (7) 122-1	
					DISK,CLUTCH (5) 110-3	
					DISK,CLUTCH (5) 112-16	
					DISK,CLUTCH (1) 114-8	
					DISK,CLUTCH (3) 115-18	
					DISK,CLUTCH (4) 115-20	
					FILTER,ELEMENT (1) 105-15	
					FILTER,ELEMENT (1) 119-1	
					GASKET (1) 117-15	
					GASKET (1) 117-18	
					GASKET (1) 120-8	
					GASKET (1) 120-10	
					GASKET (1) 120-25	
					O-RING (1) 115-22	
					O-RING (1) 115-26	
					O-RING (2) 122-32	
					O-RING (2) 122-32	
					PACKING,PREFORMED (1) 114-13	
					RETAINER,PACKING (4) 114-15	
					RETAINER,PACKING (1) 114-15	
					RING,SEAL METAL (1) 117-3	
					SEAL,DIRECT CLUTCH (1) 110-5	
					SEAL,INNER (1) 112-4	
					SEAL,PLAIN (1) 105-7	
					SEAL,PLAIN (2) 115-4	
					SEAL,PLAIN,ENCASED (1) 105-14	
					SEAL,PLAIN,ENCASED (2) 115-1	
* 34	PAHZZ	5330014800752	7X677	24210955	GASKET SET 1997,98,99,00,01.....	1
					UOC:BVY,B15,B20,B24,B25,C17,NNN	
					BOLT,MACHINE (7) 122-1	
					FILTER,ELEMENT (1) 105-15	
					FILTER,ELEMENT (1) 119-1	
					GASKET (1) 108-7	
					GASKET (1) 117-15	
					GASKET (1) 117-18	
					GASKET (1) 120-8	
					GASKET (1) 120-10	

(1) ITEM NO	(2) SMR CODE	(3) NSN	(4) CAGEC	(5) PART NUMBER	(6) DESCRIPTION AND USABLE ON CODES(UOC)	(7) QTY
					GASKET (1) 120-25	
					SEAL,PLAIN,ENCASED (1) 105-14	
* 35	PAHZZ	4330014965720	7X677	24210956	FILTER KIT,A/TRANS 1997,98,99,00,01	1
					UOC:BVY,B15,B20,B24,B25,C17,NNN	
					FILTER,ELEMENT (1) 105-15	
					GASKET (1) 108-7	
					SEAL,PLAIN,ENCASED (1) 105-14	
*35A	PAHZZ	2520014813230	7X677	24217454	GEAR,SUPPORT 1998,99,00,01.....	1
					UOC:BVY,B15,B20,B24,B25,C17,NNN	
					BOLT,MACHINE (1) 105-12	
					SEAL (1) 114-16	
					SUPPORT (1) 114-17	
* 36	PAOZZ	2530011918741	62826	287-0006	PARTS KIT,DUST BOOT.....	1
					UOC:H11,H13,H14 H15,H16,H17,H18,H20, H21,H24,H25,H26 H27,H28,MMM	
					BOOT,FIXED (1) 138-3	
					BOOT,FIXED (2) 145-3	
					CLAMP,RACE (2) 138-2	
					CLAMP,RACE (2) 145-2	
					CLAMP,RACE (2) 145-4	
					CLAMP,RIM (2) 138-4	
37	PAOZZ	2530013946168	62826	2880019	PARTS KIT,DUST BOOT.....	1
					UOC:AVY,A11,A13,A14,A15,A20,A24,A25, A26,A27,B16,B17,B18,HVY,H11,H13,H14, H15,H16,H17,H18,H20,H21,H24,H25,H26, H27,H28,MMM	
					BOOT,FIXED (1) 138-3	
					BOOT,FIXED (1) 145-3	
					BOOT,PLUNGE (1) 145-10	
					CLAMP,LOOP (2) 138-2	
					CLAMP,LOOP (1) 138-4	
					CLAMP,LOOP (1) 138-15	
					CLAMP,LOOP (1) 145-15	
					CLAMP,RACE (1) 145-2	
					CLAMP,RACE (1) 145-4	
					RING,RETAINER (2) 138-13	
					RING,RETAINER (2) 145-13	
					RING,STOP (2) 138-13	
					SPACER,RING (2) 138-14	
					SPACER,RING (2) 145-14	
38	PAOZZ	2530014599493	62826	2990054	PARTS KIT,AXLE,VEHI.....	1
					UOC:BVY,B15,B20,B24,B25,C17,NNN	
					BOOT (2) 139-3	
					CLAMP,BOOT (2) 139-2	
					CLAMP,BOOT (2) 139-4	
					DEFLECTOR,DIRT (1) 139-8	
					JOINT ASSEMBLY (1) 139-7	
					JOINT ASSEMBLY (1) 146-7	
					PARTS KIT,DUST BOOT(2) 146-4	
					RING,RETAINING (2) 139-6	
					RING,RETAINING (2) 146-6	
					RING,SPACER (2) 139-5	
					SHAFT,SHOULDERED (1) 139-9	

(1) ITEM NO	(2) SMR CODE	(3) NSN	(4) CAGEC	(5) PART NUMBER	(6) DESCRIPTION AND USABLE ON CODES(UOC)	(7) QTY
39	PAOZZ	2530014599494	62826	2990055	PARTS KIT,AXLE,VEHI.....	1
					UOC:BVY,B15,B20,B24,B25,C17,NNN	
					BOOT (2) 139-3	
					CLAMP,BOOT (2) 139-2	
					CLAMP,BOOT (2) 139-4	
					DEFLECTOR,DIRT (1) 139-8	
					JOINT ASSEMBLY (1) 139-7	
					JOINT ASSEMBLY (1) 146-7	
					RING,RETAINING (2) 139-6	
					RING,SPACER (2) 139-5	
					SHAFT,SHOULDERED (1) 139-9	
40	PAOZZ	2530014599495	62826	2990056	PARTS KIT,AXLE,VEHI.....	1
					UOC:BVY,B15,B20,B24,B25,C17,NNN	
					BOOT (2) 146-3	
					CLAMP,BOOT (2) 146-2	
					DEFLECTOR,DIRT (1) 146-8	
					JOINT ASSEMBLY (1) 146-7	
					RING,SPACER (2) 146-5	
					SHAFT,SHOULDERED (1) 146-9	
41	PAFZZ	5330011907510	24975	36-630	GASKET SET.....	1
					GASKET,INTERMEDIATE(1) 45-6	
42	PAFZZ	5330011907509	68505	37-123A	GASKET SET.....	1
					GASKET (1) 45 32	
* 43	PAOZZ	2520011892135	95019	5-213X	PARTS KIT,UNIVERSAL.....	1
					UOC:AVY,A11,A13,A14,A15,A20,A24,A25,	
					A26,A27,BVY,B15,B16,B17,B18,B20,B24,	
					B25,C17,HVY,NNN	
					BEARING RACE (4) 136-7	
					BEARING RACE (4) 136-20	
					BEARING RACE (8) 137-6	
					BEARING RACE (8) 137-20	
					CROSS ASSEMBLY (1) 136-8	
					CROSS ASSEMBLY (2) 136-21	
					CROSS ASSEMBLY (2) 137-7	
					CROSS ASSEMBLY (2) 137-21	
					RING,RETAINING (4) 136-10	
					RING,RETAINING (8) 136-23	
					RING,RETAINING (8) 137-5	
					RING,RETAINING (8) 137-22	
44	PAHZZ	5365011753593	34623	5579445	SHIM ASSORTMENT PINION AXLE BEARING	1
					SPACER,RING (1) 148-17	
					SPACER,RING (1) 148-17	
					SPACER,RING (1) 148-17	
					SPACER,RING (1) 148-17	
					SPACER,RING (1) 148-17	
					SPACER,RING (1) 148-17	
					SPACER,RING (1) 148-17	
					SPACER,RING (1) 148-17	
					SPACER,RING (1) 148-17	
					SPACER,RING (1) 148-17	
					SPACER,RING (1) 148-17	
					SPACER,RING (1) 148-17	

(1) ITEM NO	(2) SMR CODE	(3) NSN	(4) CAGEC	(5) PART NUMBER	(6) DESCRIPTION AND USABLE ON CODES(UOC)	(7) QTY
					SPACER,RING (1) 148-17	
					SPACER,RING (1) 148-17	
					SPACER,RING (1) 148-17	
					SPACER,RING (1) 148-17	
					SPACER,RING (1) 148-17	
					SPACER,RING (1) 148-17	
					SPACER,RING (1) 148-17	
					SPACER,RING (1) 148-17	
					SPACER,RING (1) 148-17	
					SPACER,RING (1) 148-17	
					SPACER,RING (1) 148-17	
					SPACER,RING (1) 148-17	
					SPACER,RING (1) 148-17	
45	PAHZZ	5365011748174	34623	5579453	SHIM ASSORTMENT DIFFERENTIAL.....	1
					SPACER,RING (1) 148-20	
					SPACER,RING (1) 148-20	
					SPACER,RING (1) 148-20	
					SPACER,RING (1) 148-20	
					SPACER,RING (1) 148-20	
					SPACER,RING (1) 148-20	
					SPACER,RING (1) 148-20	
					SPACER,RING (1) 148-20	
					SPACER,RING (1) 148-20	
					SPACER,RING (1) 148-20	
					SPACER,RING (1) 148-20	
					SPACER,RING (1) 148-20	
					SPACER,RING (1) 148-20	
					SPACER,RING (1) 148-20	
					SPACER,RING (1) 148-20	
					SPACER,RING (1) 148-20	
					SPACER,RING (1) 148-20	
					SPACER,RING (1) 148-20	
					SPACER,RING (1) 148-20	
					SPACER,RING (1) 148-20	
					SPACER,RING (1) 148-20	
					SPACER,RING (1) 148-20	
					SPACER,RING (1) 148-20	
					SPACER,RING (1) 148-20	
					SPACER,RING (1) 148-20	
					SPACER,RING (1) 148-20	
					SPACER,RING (1) 148-20	
					SPACER,RING (1) 148-20	
					SPACER,RING (1) 148-20	
					SPACER,RING (1) 148-20	
					SPACER,RING (1) 148-20	
					SPACER,RING (1) 148-20	
					SPACER,RING (1) 148-20	
					SPACER,RING (1) 148-20	
					SPACER,RING (1) 148-20	
					SPACER,RING (1) 148-20	
					SPACER,RING (1) 148-20	
					SPACER,RING (1) 148-20	
					SPACER,RING (1) 148-20	
					SPACER,RING (1) 148-20	
					SPACER,RING (1) 148-20	
					SPACER,RING (1) 148-20	
					SPACER,RING (1) 148-20	

(1) ITEM NO	(2) SMR CODE	(3) NSN	(4) CAGEC	(5) PART NUMBER	(6) DESCRIPTION AND USABLE ON CODES(UOC)	(7) QTY
					SPACER,RING (1) 148-20	
* 46	PAOZZ	2510013643120	19207	57K0107	PARTS KIT,HINGE TAI.....	1
					UOC:AVY,A11,A13,A14,A20,A24,A25,A26, A27,BVY,B17,B18,B20,B24,B25,C17,HVY, H11,H13,H14,H17,H18,H20,H24,H25,H26, H27,MMM,NNN	
					HINGE,BUTT (2) 266-14	
					NUT,SELF-LOCKING,HE(6) 266-16	
					PIN,SPRINGHINGE TAI(2) 266-20	
					SCREW,CAP,HEXAGON H(3) 266-21	
					SCREW,CAP,HEXAGON H(3) 266-23	
					SPACER,SLEEVE (3) 266-22	
					WASHER,FLAT (12) 266-15	
47	PAOZZ	2540012885240	19207	57K0109	KIT,REPLACEMENT 60 OR 100AMP ALTERNATOR MOUNTING BRACKET.....	1
					UOC:H11,H13,H14,H17,H18,H20,H21,H24, H25,H26,H27,H28,MMM	
					BRACKET,DOUBLE ANGL(1) 42-9	
					BRACKET,MOUNTING (1) 42-1	
					NUT,PLAIN,HEXAGON (1) 42-11	
					NUT,SELF-LOCKING,HE(1) 42-8	
					SCREW,CAP,HEXAGON H(1) 42-5	
					SCREW,CAP,HEXAGON H(1) 42-6	
					STUD,PLAIN (1) 42-2	
					WASHER,FLAT (1) 42-3	
					WASHER,FLAT (1) 42-7	
					WASHER,FLAT (1) 42-12	
					WASHER,LOCK (1) 42-4	
					WASHER,LOCK (1) 42-10	
48	PAFZZ	5340014120141	19207	57K0223	MODIFICATION KIT,BLAST SHIELD.....	1
					UOC:A11,A24,A27,B24,H11,H24,H27,MMM	
					CLIP,SPRING,TENSION(1) 278-2	
					CUTTER,SPOTWELD (1) 278-3	
					RIVIT,BLIND (28) 278-1	
49	PAOZZ	2640013718332	19207	57K0237	RUNFLAT KIT,INSERT.....	1
					UOC:AVY,A11,A13,A14,A15,A20,A24,A25, A26,A27,B16,B17,B18,HVY,H11,H13,H14, H15,H16,H17,H18,H20,H21,H24,H25,H26, H27,H28,MMM	
					BEDLOCK,TIRE RIM (1) 167-18	
					RUNFLAT,INSERT (4) 167-17	
50	PAFZZ	5330013618013	19207	57K0239	PARTS KIT,SEAL REPL SHAFT AND HOUSING.....	1
					SEAL KIT (1) 172-3	
					SEAL,PITMAN SHAFT (1) 172-19	
51	PAFZZ	5330013618014	19207	57K0240	PARTS KIT,SEAL REPL PISTON AND END PLUG.....	1
					PARTS KIT,STEERING (1) 172-9	
					PARTS KIT,STEERING (1) 172-21	
52	PAFZZ	5330013618015	19207	57K0241	PARTS KIT,SEAL REPL DUST AND STUB SHAFT.....	1
					PARTS KIT,SEAL REPL(1) 172-12	
					PARTS KIT,STEERING (1) 172-13	

(1) ITEM NO	(2) SMR CODE	(3) NSN	(4) CAGEC	(5) PART NUMBER	(6) DESCRIPTION AND USABLE ON CODES(UOC)	(7) QTY
53	PAFZZ	2530013618012	19207	57K0242	PARTS KIT,POWER STE GEAR.....	1
					BEARING ASSEMBLY (1) 172-7	
					PARTS KIT,LINEAR AC(1) 172-8	
					PARTS KIT,SAFETY RE(1) 172-6	
					PARTS KIT,STEERING (1) 172-11	
* 54	PAOZZ	2530014590367	34623	57K0262	PARTS KIT,BRAKE SHO.....	1
					UOC:H11,H13,H14,H15,H16,H17,H18,H20, H21,H24,H25,H26,H27,H28,MMM	
					DISC BRAKE SHOE,LH (4) 158-11	
					DISC BRAKE SHOE (4) 157-16	
* 55	PAOZZ	2530014073977	34623	57K0264	BRAKE SHOE SET.....	1
					UOC:AVY,A13,A14,A15,A25,A26,A27,B16, B17,B18,HVY	
					BRAKE SHOE ASSEMBLY(4) 158-11	
					DISC BRAKE SHOE (4) 157-16	
56	PAOZZ	2530013943748	19207	57K0274	KIT,BOOT PLUNGE.....	1
					UOC:AVY,A11,A13,A14,A15,A20,A24,A25, A26,A27,B16,B17,B18,HVY	
					BOOT,PLUNGE (1) 138-10	
					BOOT,PLUNGE (1) 145-10	
					CLAMP,BOOT (1) 145-15	
					CLAMP,LOOP (2) 138-2	
					CLAMP,LOOP (1) 138-15	
					CLAMP,RACE (1) 145-2	
					RING,RETAINER (2) 138-13	
					RING,RETAINER (2) 145-13	
					RING,SPACER (2) 145-14	
					RING,STOP (2) 138-13	
					SPACER,RING (2) 138-14	
57	PAOZZ	2640014196205	19207	57K0297	VALVE STEM ASSEMBLY.....	1
					UOC:AVY,A11,A13,A14,A15,A20,A24,A25, A26,A27,B16,B17,B18,HVY,H11,H13,H14, H15,H16,H17,H18,H20,H21,H24,H25,H26, H27,H28,MMM	
					ADAPTER,STRAIGHT,PI(1) 167-24	
					NUT,SELF-LOCKING,HE(1) 167-26	
					O-RING (1) 167-25	
					VALVE CORE (1) 167-22	
					VALVE,PHEUMATIC (1) 167-23	
58	PAOZZ	2530014138886	34623	57K3205	KIT,STEERING COLUMN.....	1
					HOUSING GEAR (1) 169-8	
					NUT,SELF-LOCKING,HE(1) 169-1	
					NUT,SELF-LOCKING,HE(6) 169-27	
					NUT,SELF-LOCKING,HE(2) 169-33	
					PIN,STRAIGHT,THREAD(1) 169-5	
					SCREW,CAP,HEXAGON H(4) 169-30	
					SCREW,CAP,SOCKET HE(2) 169-31	
					WASHER,FLAT (4) 169-32	
					WASHER,KEY (1) 169-3	
* 59	PAOZZ	2540014311338	19207	57K3222	PARTS KIT,TURN SIGN.....	1
					CONTROL,DIRECTIONAL(1) 49-1	
					CONTROL,DIRECTIONAL(1) 49-10	
					SCREW,TAPPING (4) 49-3	

(1) ITEM NO	(2) SMR CODE	(3) NSN	(4) CAGEC	(5) PART NUMBER	(6) DESCRIPTION AND USABLE ON CODES(UOC)	(7) QTY
					SCREW,TAPPING (3) 49-11	
60	PAOZZ	5980014388939	19207	57K3238	REPLACEMENT KIT,LENSE AND LAMP.....	1
					UOC:BVY,B15,B20,B24,B25,C17,NNN	
					SEMICONDUCTOR (2) 47-2	
					LENSE (2) 47-13	
61	PAOZZ	5330014596477	19207	57K3489	PARTS KIT,SEAL,PITMAN SHAFT AND	1
					HOUSING.....	
					UOC:BVY,B15,B20,B24,B25,C17,NNN	
					SEAL,KIT (1) 172-3	
					SEAL,PITMAN (1) 172-19	
* 62	PAFZZ	2520014305294	19207	57K3502	PARTS KIT,HYDRAULIC 1996.....	1
					UOC:BVY,B15,B20,B24,B25,C17,NNN	
					MICROCIRCUIT,LINEAR(1) 50-4	
					TRANSMISSION,HYDRAU(1) 105-1	
63	PAOZZ	2530014559330	19207	57K3512	PARTS KIT,CALIPER,D.....	1
					BOOT,VEHICULAR COMP(1) 157-14	
					CAP,PISTON (1) 157-15	
					GASKET (1) 157-12	
					O-RING,ACTUATOR SHA(1) 157-11	
					O-RING,ANTI-ROTATIO(1) 157-7	
					O-RING,PIN RETAININ(1) 157-8	
					O-RING,THRUST SCREW(1) 157-13	
					SEAL,ACTUATOR SHAFT(1) 157-6	
* 64	PAOZZ	2530014571337	19207	57K3515	PARTS KIT,DUST BOOT.....	1
					UOC:BVY,B15,B20,B24,B25,C17,NNN	
					BOOT (2) 139-3	
					BOOT (2) 146-3	
					CLAMP,BOOT (2) 139-2	
					CLAMP,BOOT (2) 139-4	
					CLAMP,BOOT (2) 146-2	
					PARTS KIT,AXLE (1) 139-10	
					PARTS KIT,AXLE (1) 146-10	
					PARTS KIT,DUST BOOT(2) 146-4	
					RING,RETAINING (2) 139-6	
					RING,RETAINING (2) 146-6	
					RING,SPACER (2) 139-5	
					RING,SPACER (2) 146-5	
* 65	PAFZZ	2520014396830	19207	57K3523	TRANSMISSION,HYDRAU 1997.....	1
					UOC:BVY,B15,B20,B24,B25,C17,NNN	
					COVER,ACCESS (2) 125-21	
					MICROCIRCUIT,LINEAR(1) 50-4	
					TRANSMISSION,HYDRAU(1) 105-1	
					TUBE,BENT,METALLIC (1) 125-3	
					TUBE,BENT,METALLIC (1) 125-4	
66	PAOZZ	2530014433405	19207	57K3527	PARTS KIT,VEHICULAR WHEEL.....	1
					ADAPTER,STRAIGHT,PI(1) 167-24	
					CAP,PNEUMATIC VALVE(1) 167-21	
					NUT,SELF-LOCKING (12) 167-20	
					NUT,SELF-LOCKING,HE(1) 167-26	
					O-RING (1) 167-16	
					O-RING (1) 167-25	
					RIM,WHEEL,PNEUMATIC(1) 167-14	
					RIM,WHEEL,PNEUMATIC(1) 167-19	

(1) ITEM NO	(2) SMR CODE	(3) NSN	(4) CAGEC	(5) PART NUMBER	(6) DESCRIPTION AND USABLE ON CODES(UOC)	(7) QTY
					VALVE CORE (1) 167-22	
					VALVE,PNEUMATIC TIR(1) 167-23	
* 67	PAFZZ	2520014617072	19207	57K3539	TRANSMISSION,HYDRAU 1998.....	1
					UOC:BVY,B15,B20,B24,B25,C17,NNN	
					COVER,ACCESS (2) 125-21	
					MICROCIRCUIT,LINEAR(1) 50-4	
					TRANSMISSION,HYDRAU(1) 105-1	
					TUBE,BENT,METALLIC (1) 125-3	
					TUBE,BENT,METALLIC (1) 125-4	
*67A	PAFZZ	2520014617074	19207	57K3549	TRANSMISSION,HYDRAU 1999.....	1
					UOC:BVY,B15,B20,B24,B25,C17,NNN	
					COVER,ACCESS (2) 125-21	
					MICROCIRCUIT,LINEAR(1) 50-4	
					TRANSMISSION,HYDRAU(1) 105-1	
					TUBE,BENT,METALLIC (1) 125-3	
					TUBE,BENT,METALLIC (1) 125-4	
*67B	PAFZZ	2520014737410	19207	57K3558	TRANSMISSION,HYDRAU 2000.....	1
					UOC:BVY,B15,B20,B24,B25,C17,NNN	
					COVER,ACCESS (2) 125-21	
					MICROCIRCUIT,LINEAR(1) 50-4	
					TRANSMISSION,HYDRAU(1) 105-1	
					TUBE,BENT,METALLIC (1) 125-3	
					TUBE,BENT,METALLIC (1) 125-4	
*67C	PAFZZ	2520014890849	19207	57K3569	TRANSMISSION,HYDRAU 2001.....	1
					UOC:BVY,B15,B20,B24,B25,C17,NNN	
					COVER,ACCESS (2) 125-21	
					MICROCIRCUIT,LINEAR(1) 50-4	
					TRANSMISSION,HYDRAU(1) 105-1	
					TUBE,BENT,METALLIC (1) 125-3	
					TUBE,BENT,METALLIC (1) 125-4	
					TRANSMISSION,HYDRAU(1) 105-1	
68	PAFZZ	2920004721723	19207	5703776	PARTS KIT,ENGINE GE.....	1
					UOC:A11,A13,A14,A20,A24,A25,A26,A27,	
					B17,B18,H11,H13,H14,H17,H18,H20,H21,	
					H24,H25,H26,H27,H28	
					RECTIFIER AND LEAD (1) 43A-26	
					RECTIFIER AND LEAD (1) 43A-28	
69	PAFZZ	2920012222183	19207	5703776-1	PARTS KIT,ENGINE GE.....	1
					UOC:A11,A13,A14,A20,A24,A25,A26,A27,	
					B17,B18,H11,H13,H14,H17,H18,H20,H21,	
					H24,H25,H26,H27,H28,MMM	
					BRUSH,ELECTRICAL (2) 43A-18	
					HOLDER AND STUD ASS(2) 43A-16	
					PACKING,PREFORMED (1) 43A-5	
					PACKING,PREFORMED (2) 43A-9	
					PACKING,PREFORMED (1) 43A-23	
					SEAL,SINGLE LIP (2) 43A-4	
					SEAL,SINGLE LIP (1) 43A-13	
					SEAL,SINGLE LIP (1) 43A-21	
70	PFFZZ	2540002004249	19207	5704052	PARTS KIT,VEHICULAR BURNER ASSY....	1
					UOC:A15,B15,B16,H15,H16	
					BOLT,HOOK (4) 345-23	
					BOLT,HOOK (2) 348-22	

(1) ITEM NO	(2) SMR CODE	(3) NSN	(4) CAGEC	(5) PART NUMBER	(6) DESCRIPTION AND USABLE ON CODES(UOC)	(7) QTY
					CLAMP,RIM CLENCHING(4) 345-32	
					CLAMP,RIM CLENCHING(4) 348-23	
					GASKET (1) 345-20	
					GASKET (1) 348-20	
					HEADER,PLATE ASSEMB(1) 350-2	
					HEADER,PLATE ASSEMB(1) 351-1	
					NUT,HEXAGON (3) 350-1	
					NUT,PLAIN HEXAGON (4) 345-24	
					NUT,PLAIN HEXAGON (4) 348-3	
					NUT,SELF-LOCKING (4) 345-27	
					O-RING (1) 345-21	
					O-RING (1) 348-21	
					SCREW (3) 350-12	
					SCREW,MACHINE (1) 350-10	
					SCREW,MACHINE (1) 351-10	
					SHIELD,FUEL VAPOR (1) 350-9	
					SHIELD,FUEL VAPOR (1) 351-9	
					VAPORIZER (1) 350-6	
					VAPORIZER (1) 351-6	
					WASHER (1) 351-8	
					WASHER (1) 350-5	
					WASHER (2) 350-4	
					WASHER (1) 350-8	
					WASHER,FIBER (1) 351-5	
					WASHER,FLAT (1) 350-7	
					WASHER,FLAT (1) 351-7	
					WICK (1) 351-4	
					WICK (1) 350-3	
71	PAOZZ	2530011918740	34623	5705606	PARTS KIT,DUST BOOT.....	1
					UOC:H11,H13,H14,H15,H16,H17,H18,H20, H21,H24,H25,H26,H27,H28,MMM	
					BOOT,PLUNGE (1) 138-10	
					BOOT,PLUNGE (1) 145-10	
					CLAMP,RACE (2) 138-2	
					CLAMP,RIM (2) 138-4	
					CLAMP,RACE (2) 145-2	
					CLAMP,RIM (2) 145-4	
* 72	PAOZZ	2540013008745	19207	5705618	PARTS KIT,DOOR LATCH RIGHT HAND.....	1
					UOC:AVY,A13,A14,BVY,HVY,H13,H14,H21, H28,NNN	
					HANDLE,DOOR (1) 316-9	
					HANDLE,DOOR (1) 316-14	
					HANDLE,DOOR (1) 320-9	
					HANDLE,DOOR (1) 320-12	
					HANDLE,DOOR (1) 320-21	
					HANDLE,DOOR (1) 320-24	
					HANDLE,DOOR (1) 320-28	
					HANDLE,DOOR (1) 324-12	
					HANDLE,DOOR (1) 324-19	
					HANDLE,DOOR (1) 324-26	
					HANDLE,DOOR (1) 324-31	
					HANDLE,DOOR (1) 375-17	
					HANDLE,DOOR (1) 375-22	

(1) ITEM NO	(2) SMR CODE	(3) NSN	(4) CAGEC	(5) PART NUMBER	(6) DESCRIPTION AND USABLE ON CODES(UOC)	(7) QTY
					HANDLE,DOOR (1) 378-17	
					HANDLE,DOOR (1) 378-22	
					LOOP,STRAP,FASTENER(1) 320-30	
					SCREW,MACHINE (1) 316-10	
					SCREW,MACHINE (1) 320-8	
					SCREW,MACHINE (1) 320-20	
					SCREW,MACHINE (1) 324-11	
					SCREW,MACHINE (1) 324-25	
					SCREW,MACHINE (1) 378-16	
					SPRING,HELICAL,TORS(1) 316-11	
					SPRING,HELICAL,TORS(1) 320-10	
					SPRING,HELICAL,TORS(1) 320-22	
					SPRING,HELICAL,TORS(1) 324-13	
					SPRING,HELICAL,TORS(1) 324-27	
					SPRING,HELICAL,TORS(1) 375-18	
					SPRING,HELICAL,TORS(1) 378-18	
					WASHER,FLAT (1) 316-13	
					WASHER,FLAT (1) 320-11	
					WASHER,FLAT (1) 320-23	
					WASHER,FLAT (1) 324-18	
					WASHER,FLAT (1) 375-21	
					WASHER,FLAT (1) 378-21	
73	PAOZZ	2540013008744	19207	5705619	HANDLE,DOOR,INSIDE LEFT HAND.....	1
					UOC:AVY,A13,A14,BVY,HVY,H13,H14,H21, H28,NNN	
					HANDLE,DOOR,VEHICUL(1) 316-9	
					HANDLE,DOOR,VEHICUL(1) 316-14	
					HANDLE,DOOR,VEHICUL(1) 320-9	
					HANDLE,DOOR,VEHICUL(1) 320-12	
					HANDLE,DOOR,VEHICUL(1) 320-21	
					HANDLE,DOOR,VEHICUL(1) 320-24	
					HANDLE,DOOR,VEHICUL(1) 324-12	
					HANDLE,DOOR,VEHICUL(1) 324-19	
					HANDLE,DOOR,VEHICUL(1) 324-26	
					HANDLE,DOOR,VEHICUL(1) 324-31	
					HANDLE,DOOR,VEHICUL(1) 375-17	
					HANDLE,DOOR,VEHICUL(1) 375-22	
					HANDLE,DOOR,VEHICUL(1) 378-17	
					HANDLE,DOOR,VEHICUL(1) 378-22	
					SCREW,MACHINE (1) 316-10	
					SCREW,MACHINE (1) 320-20	
					SCREW,MACHINE (1) 320-8	
					SCREW,MACHINE (1) 324-11	
					SCREW,MACHINE (1) 324-25	
					SCREW,MACHINE (1) 378-16	
					SPRING,HELICAL,TORS(1) 316-11	
					SPRING,HELICAL,TORS(1) 320-10	
					SPRING,HELICAL,TORS(1) 320-22	
					SPRING,HELICAL,TORS(1) 324-13	
					SPRING,HELICAL,TORS(1) 324-27	
					SPRING,HELICAL,TORS(1) 375-18	
					SPRING,HELICAL,TORS(1) 378-18	
					WASHER,FLAT (1) 316-13	

(1) ITEM NO	(2) SMR CODE	(3) NSN	(4) CAGEC	(5) PART NUMBER	(6) DESCRIPTION AND USABLE ON CODES(UOC)	(7) QTY
					WASHER,FLAT (1) 320-11	
					WASHER,FLAT (1) 320-23	
					WASHER,FLAT (1) 324-18	
					WASHER,FLAT (1) 324-30	
					WASHER,FLAT (1) 375-21	
					WASHER,FLAT (1) 378-21	
					WASHER,FLAT (1) 324-30	
74	PAHZZ	5365011748184	34623	5740228	SHIM SET.....	1
					UOC:H11,H13,H14,H15,H16,H17,H18,H20, H21,H24,H25,H26,H27,H28,MMM	
					SHIM (1) 128-6	
					SHIM (1) 128-6	
					SHIM (1) 128-6	
					SHIM (1) 128-6	
					SHIM (1) 128-6	
					SHIM (1) 128-6	
75	PAHZZ	3110011753538	34623	5740229	BEARING,ROLLER,NEED.....	1
					UOC:H11,H13,H14,H15,H16,H17,H18,H20, H21,H24,H25,H26,H27,H28,MMM	
					ROLLER,BEARING (82) 128-27	
*75A	PAFZZ		34623	5716414	KIT,POWER STEERING PUMP.....	1
					UOC:BVY,B15,B20,B25,C17,NNN	
					O-RING (1) 175A-4	
					SPRING (1) 175A-6	
					VALVE ASSEMBLY (1) 175A-5	
79	PAHZZ	2540012898330	34623	5741908	SEAL,KIT.....	1
					UOC:A15,B15,H15	
					RING,FELT (1) 491-18	
					RING,RETAINING (1) 491-17	
					SEAL (1) 491-14	
					SEAL (1) 491-15	
					SEAL (1) 491-16	
80	PAOZZ	2540012888567	34623	5742041	KIT,REPLACEMENT 200AMP ALTERNATOR MOUNTING BRACKET.....	1
					UOC:HVY,H15,H16	
					BRACKET,DOUBLR ANGL(1) 42-9	
					BRACKET,MOUNTING (1) 42-1	
					NUT,PLAIN,HEXAGON H(1) 42-11	
					NUT,SELF-LOCKING (1) 42-8	
					SCREW,CAP,HEXAGON H(1) 42-5	
					SCREW,CAP,HEXAGON H(1) 42-6	
					STUD,PLAIN (1) 42-2	
					WASHER,FLAT (1) 42-3	
					WASHER,FLAT (1) 42-7	
					WASHER,FLAT (1) 42-12	
					WASHER,LOCK (1) 42-4	
					WASHER,LOCK (1) 42-10	
81	PAOZZ	5340013889512	34623	5935425	KIT,BATTERY.....	1
					BOOT,DUST (3) 69-16	
					CAP,PROTECTIVE (3) 69-17	
82	PAFZZ	2530011238787	7X677	7846626	VALVE,STEERING SECT.....	1

(1) ITEM NO	(2) SMR CODE	(3) NSN	(4) CAGEC	(5) PART NUMBER	(6) DESCRIPTION AND USABLE ON CODES(UOC)	(7) QTY
					BODY VALVE (1) 172-14	
					SHAFT,STEERING (1) 172-16	
					VALVE,LINEAR,DIRECT(1) 172-15	
83	PAFZZ	5330010440703	52788	7848522	PARTS KIT,SEAL REPL POWER STEERING PUMP.....	1
					GASKET (1) 176-11	
					MAGNET,ERMANENT (1) 176-8	
					O-RING (2) 176-14	
					RING,SEAL (2) 176-4	
					SEAL (1) 176-3	
					SEAL (1) 176-7	
					SEAL,O-RING (1) 176-5	
84	PAFZZ	5330004933876	11083	8S4680	PACKING,PREFORMED.....	1
					SEAL,O-RING (3) 45-52	
85	PAHZZ	5330012881307	63829	8385-9611	GASKET SET..... UOC:A15,B15,H15	1
					GASKET (1) 491-25	
					GASKET (1) 491-27	
86	PAHZZ	5330011385190	11862	8623917	SEAL,KIT..... UOC:AVY,A11,A13,A14,A15,A20,A24,A25, A26,A27,B16,B17,B18,HVY,H11,H13,H14, H15,H16,H17,H18,H20,H21,H24,H25,H26, H27,H28,MMM	1
					SEAL,CENTER (1) 111-4	
					SEAL,INNER (1) 111-5	
					SEAL,OUTTER (1) 111-3	
87	PAHZZ	3120011674172	7X677	8623920	PARTS KIT,BEARING R..... UOC:AVY,A11,A13,A14,A15,A20,A24,A25, A26,A27,B16,B17,B18,HVY,H11,H13,H14, H15,H16,H17,H18,H20,H21,H24,H25,H26, H27,H28,MMM	1
					BEARING,NEEDLE (1) 106-5	
					BEARING,NEEDLE (1) 107-5	
					RACE,BEARING (1) 106-4	
					RACE,BEARING (1) 106-6	
					RACE,BEARING (1) 107-4	
					RACE,BEARING (1) 107-6	
88	PAHZZ	3110011672443	7X677	8623921	BEARING,ROLLER,THRU.....	1
					BEARING,NEEDLE (1) 106-25	
					BEARING,NEEDLE (1) 107-11	
					RACE,BEARING (1) 106-24	
					RACE,BEARING (1) 106-26	
					RACE,BEARING (1) 107-10	
					RACE,BEARING (1) 107-12	
					RING,RETAINER (1) 106-19	
89	PAHZZ	3110011690734	7X677	8623922	BEARING,ROLLER,THRU TRANSMISSION...	1
					BEARING,NEEDLE (1) 106-21	
					BEARING,NEEDLE (1) 107-19	
					RACE,BEARING (1) 106-20	
					RACE,BEARING (1) 106-22	
					RACE,BEARING (1) 107-18	
					RACE,BEARING (1) 107-20	
90	PAHZZ	2520011513570	7X677	8625990	PARTS KIT,RACE ASSE.....	1

(1) ITEM NO	(2) SMR CODE	(3) NSN	(4) CAGEC	(5) PART NUMBER	(6) DESCRIPTION AND USABLE ON CODES(UOC)	(7) QTY
					UOC:AVY,A11,A13,A14,A15,A20,A24,A25, A26,A27,B16,B17,B18,HVY,H11,H12,H14, H15,H16,H17,H18,H20,H21,H24,H25,H26, H27,H28	
					GASKET (1) 116-20	
* 91	PAHZZ	2520011637213	7X677	8627989	PARTS KIT,TRANSMISS.....	1
					UOC:AVY,A11,A13,A14,A15,A20,A24,A25, A26,A27,B16,B17,B18,HVY,H11,H13,H14, H15,H16,H17,H18,H20,H21,H24,H25,H26, H27,H28	
					DISK,CLUTCH (1) 111-10	
					PARTS KIT,TRANSMISS(1) 111-6	
* 93	PAFZZ	2520014108067	7X677	8680911	PARTS KIT,MECHANICA.....	1
					UOC:BVY,B15,B20,B24,B25,C17,NNN	
					RING,RETAINING (1) 115-12	
* 94	PAHZZ	3120011748153	7X677	8680914	KIT,TRANSMISSION.....	1
					BOLT,INTERNALLY REL(1) 104-4	
					BOLT,MACHINE (1) 105-12	
					CLUTCH,SPRING (1) 113-16	
					PISTON (1) 114-12	
					PLUG,VENT (1) 113-11	
					PLUG,VENT (1) 114-16	
					SEAL ASSEMBLY (1) 113-15	
					SUPPORT (1) 113-10	
					SUPPORT (1) 114-17	
* 95	PAHZZ	2520014108077	7X677	8680915	KIT,TRANSMISSION.....	1
					BEARING,ROLLER,NEED(1) 109-16	
					DISK,CLUTCH (1) 109-14	
					DISK,CLUTCH (1) 114-3	
					RACE (1) 114-2	
					RING (1) 110-14	
					RING,BEARING,OUTER (1) 109-15	
					SPRAG ASSEMBLY (1) 114-1	
97	PAHZZ	2520011647157	7X677	8680929	PISTON AND RING ASSY REAR	1
					ACCUMULATOR.....	
					UOC:BVY,B15,B20,B24,B25,C17,NNN	
					PISTON (1) 117-12	
					RING,OIL SEAL (1) 117-11	
					RING,OIL SEAL,OUTER(1) 117-14	
98	PAFZZ	2520014818344	7X677	8685921	PARTS KIT,OIL PAN.....	1
					UOC:BVY,B15,B20,B24,B25,C17,NNN	
					MAGNET,CLIP,COLLECT(1) 105-16	
					PAN,TRANSMISSION (1) 105-18	
					PLUG,PROTECTIVE,DUS(1) 105-21	
					WASHER,FLAT (1) 105-20	
99	PAFZZ	2920011922959	68505	90-816	PARTS KIT,SOLENOID.....	1
					BOOT (1) 45-27	
					RETAINER CORE (1) 45-24	
					RETAINER CORE (1) 45-26	
					SNAP RING CORE END (1) 45-23	
					SPRING,CORE (1) 45-25	
					WASHER,SOLENOID (1) 45-28	
100	PAFZZ	2920011684128	68505	90-2187	PARTS KIT,ENGINE GE.....	1

(1) ITEM NO	(2) SMR CODE	(3) NSN	(4) CAGEC	(5) PART NUMBER	(6) DESCRIPTION AND USABLE ON CODES(UOC)	(7) QTY
					UOC:A11,A13,A14,A20,A24,A25,A26,A27,	
					UOC:A11,A13,A14,A20,A24,A25,A26,A27,	
					B17,B18,H11,H13,H14,H17,H18,H20,H21,	
					H24,H25,H26,H27,H28,MMM	
					BOLT,THRU,TORX (6) 43-59	
					HOLDER,ELECTRICAL (1) 43-40	
					PLUG,YOKE ADJUSTING(1) 43-56	
					SCREW,FLAT HEAD (6) 43-60	
					SCREW,SELF-TAPPING (6) 43-26	
					SCREW,TORX (6) 43-58	
					WASHER,LOCK (6) 43-25	
					WASHER,LOCK (1) 43-35	
					WASHER,LOCK (12) 43-57	
101	PAFZZ	5310010279392	68505	90-2188	NUT,SELF-LOCKING,CA.....	1
					UOC:A11,A13,A14,A20,A24,A25,A26,A27,	
					B17,B18,H11,H13,H14,H17,H18,H20,H21,	
					H24,H25,H26,H27,H28,MMM	
					KEY,WOODRUFF (1) 43-4	
					NUT (1) 43-2	
					WASHER,FLAT (1) 43-3	
102	PAFZZ	2920003026342	68505	90-2206	PARTS KIT,YOKE ADJU.....	1
					GASKET PLUG (1) 45-15	
					NUT (1) 45-22	
					PIN,STRAIGHT (2) 45-13	
					PLUG,YOKE,ADJUSTING(1) 45-16	
					PLUG,YOKE,ADJUSTING(1) 45-14	
103	PAFZZ	2920010687182	68505	90-2225	PARTS KIT,ENGINE GE.....	1
					CONTACK ASSEMBLY (1) 45-35	
					NUT,HEXAGON ELASTIC(1) 45-33	
					SPRING (1) 45-36	
					WASHER,PLAIN (1) 45-34	
					WASHER,STEEL (1) 45-37	
104	PAFZZ	2920011684129	68505	90-2531	PARTS KIT,ENGINE GE.....	1
					UOC:A11,A13,A14,A20,A24,A25,A26,A27,	
					B17,B18,H11,H13,H14,H17,H18,H20,H21,	
					H24,H25,H26,H27,H28,MMM	
					BEARING,BALL (1) 43-12	
					END HEAD (1) 43-15	
					O-RING (1) 43-10	
					RETAINER ASSEMBLY (1) 43-6	
					SEAL,KIT (1) 43-7	
					SEAL,KIT (1) 43-13	
					SPACER (1) 43-9	
					SPRING,SEAL BEARING(1) 43-8	
					WASHER (1) 43-11	
105	PAFZZ	2920011684130	68505	90-2532	PARTS KIT,ENGINE GE.....	1
					UOC:A11,A13,A14,A20,A24,A25,A26,A27,	
					B17,B18,H11,H13,H14,H17,H18,H20,H21,	
					H24,H25,H26,H27,H28,MMM	
					BEARING,OUTER RACE (1) 43-17	
					RETAINER,BEARING (1) 43-21	
					RETAINER,FELT (1) 43-18	
					RETAINER,FELT (1) 43-20	

(1) ITEM NO	(2) SMR CODE	(3) NSN	(4) CAGEC	(5) PART NUMBER	(6) DESCRIPTION AND USABLE ON CODES(UOC)	(7) QTY
					RING,SEAL BEARING (1) 43-22	
					RING,SEAL BEARING (1) 43-24	
					SEAL (1) 43-16	
					WASHER,FELT (1) 43-19	
106	PAFZZ	5305011889707	68505	90-2836	SCREW ASSORTMENT.....	1
					SCREW,ASSORTMENT (1) 45-65	
					SCREW,HEX HEAD (7) 45-19	
					SCREW,HEX HEAD (4) 45-76	
107	PAFZZ	2920011922956	68505	90-2837	PARTS KIT,ENGINE GE.....	1
					BUSHING,INSULATING (1) 45-53	
					BUSHING,INSULATING (1) 45-72	
					NUT,HEXAGON (1) 45-59	
					NUT,HEXAGON (4) 45-61	
					NUT,HEXAGON (1) 45-78	
					NUT,HEXAGON (3) 45-81	
					STUD,TERMINAL (1) 45-64	
					STUD,TERMINAL (1) 45-66	
					STUD,TERMINAL (1) 45-70	
					WASHER,CUP,STARTER (1) 45-56	
					WASHER,CUP,STARTER (1) 45-75	
					WASHER,INSULATING (1) 45-55	
					WASHER,INSULATING (1) 45-62	
					WASHER INSULATING (1) 45-71	
					WASHER,INSULATING (1) 45-74	
					WASHER,NEOPRENE (1) 45-54	
					WASHER,NEOPRENE (2) 45-73	
					WASHER,LOCK (4) 45-58	
					WASHER,LOCK (2) 45-80	
					WASHER,PLAIN (1) 45-57	
					WASHER,PLAIN (1) 45-63	
					WASHER,PLAIN (1) 45-77	
108	PAFZZ	2920011924473	68505	90-2838	PARTS KIT,ENGINE GE.....	1
					BEARING,ABS BRONZE (1) 45-69	
					FELT OIL RETAINER (1) 45-68	
					SCREW,FILL HEAD (3) 45-5	
109	PAFZZ	3120011914637	19728	90-2840	PARTS KIT,BEARING R.....	1
					SPACER (1) 45-7	
					THRUST WASHER (1) 45-39	
					THRUST WASHER (8) 45-40	
					WASHER,FLAT (1) 45-1	
110	PAFZZ	2920011916534	68505	90-2841	PARTS KIT,ENGINE GE.....	1
					PINION STOP STARTER(1) 45-10	
					SNAP,RING (1) 45-11	
111	PAFZZ	2520012893617	63829	9103-9800	PARTS KIT,CLUTCH DI.....	1
					UOC:A15,B15,H15	
					CLAMP (1) 491-12	
					KEY,MACHINE (1) 491-4	
					NUT (1) 491-2	
					RING,SNAP (1) 491-5	
					RING,SNAP (1) 491-7	
					SCREW (1) 491-11	
					SHIM (1) 491-19	
					SHIM (1) 491-20	

(1) ITEM NO	(2) SMR CODE	(3) NSN	(4) CAGEC	(5) PART NUMBER	(6) DESCRIPTION AND USABLE ON CODES(UOC)	(7) QTY
					SHIM (1) 491-21	
112	PAFZZ	2520012903921	63829	9140-9810	PARTS KIT,CLUTCH DI.....	1
					UOC:AVY,BVY,HVY	
					PLATE (1) 491-3	
					PULLLEY (1) 491-6	

END OF FIGURE

(1) ITEM NO	(2) SMR CODE	(3) NSN	(4) CAGEC	(5) PART NUMBER	(6) DESCRIPTION AND USABLE ON CODES(UOC)	(7) QTY
					GROUP 95 GENERAL USE STANDARIZED PARTS	
					9501 BULK MATERIAL	
					FIG. BULK	
1	PAOZZ	2590014579922	19207	12340103	BEZEL,AUTOMOTIVE.....	V
2	PAOZZ	4010005852108	16004	C43974	CHAIN,WELDLESS TYPE"2",CLASS 2 STEEL,10 LINK.....	V
3	PAOZZ	4020002460688	81755	P5006-4G	CORD,FIBROUS.....	V
4	PAOZZ		7X677	20197272	FASTENER,TAPE,HOOK.....	V
5	PAOZZ	5330010419721	26051	R-451-N	GASKET 3/16 THICK, 42 INCHES WIDE, 60 FT. LONG.....	V
6	PAOZZ	5325000743301	96906	MS21266-2N	GROMMET,NONMETALLIC FLEXIBLE, .162 INCHES X .200 INCHES X 25.0 FEET LONG,BLACK.....	V
* 7	PAOZZ	4720011995717	7X677	9440949	HOSE,NONMETALLIC 3/4 O.D.,1/2 I.D...	V
8	PAOZZ	4720001115096	21868	AD778-08B79	HOSE,AIR DUCT REINFORCED 2.00 I.D., 12 FT LONG,WIRE.....	V
9	PAOZZ	4720001393968	24161	4377	HOSE,NONMETALLIC 1-3/4 I.D.,1.00 O.D., 50 FT LONG.....	V
* 10	PAOZZ	4720000069541	24161	G3336US-10	HOSE,NONMETALLIC 1.00 O.D.,5/8 I.D..	V
* 11	PAOZZ	4720011637833	24161	4219-3681	HOSE,NONMETALLIC.1/2 O.D.,1/4 I.D...	V
* 12	PAOZZ	4720011560549	7X677	9439046	HOSE,NONMETALLIC.1/4 I.D.....	V
* 13	PAOZZ	4720011560550	7X677	9438381	HOSE,NONMETALLIC 5/32 I.D.....	V
* 14	PAOZZ	4720011482768	7X677	9438315	HOSE,NONMETALLIC 5/16 I.D.....	V
* 17	PAOZZ	4720000658682	29510	1125218C1	HOSE,NONMETALLIC 3/16 I.D.....	V
18	PAOZZ	4720006844033	83065	RB1450-1-4IDX1-2 0D	HOSE,NONMETALLIC RUBBER, INNER TUBE, OUTER COVER, FIBER BRAID,1/2 O.D.,1/4 I.D.,50 FT LONG.....	V
19	PAOZZ	4720011699891	61424	PFT-6B	HOSE,NONMETALLIC NYLON,3/8 O.D.,5/16 I.D.,50 FT LONG.....	V
* 20	PAOZZ	4720010036706	61424	PFT-88-BLK-100	HOSE,NONMETALLIC.....	V
21	PAOZZ	4720011883190	59150	1775-826	HOSE,NONMETALLIC SYNTHETIC RUBBER INNER O.D., 1/4 I.D., 1/8, 50 FT LONG.....	V
22	PAOZZ	4720011856673	34623	ET029	HOSE,NONMETALLIC SPIRAL REINFORCED, .380 O.D.,290 I.D.,15 FT LONG.....	V
23	PAOZZ	4720011862358	81300	6490610019	HOSE,NONMETALLIC FUEL AND OIL RESISTANT,3/8 I.D.,5/8 O.D.,25 FT LONG.....	V
24	PAOZZ	4720002414435	30327	C110-10	HOSE,NONMETALLIC.....	V
25	PAOZZ	4720011595796	7X677	9438373	HOSE,NONMETALLIC FUEL AND OIL RESISTANT,5/8 O.D.,3/8 I.D.,25 FT LONG.....	V
26	PAOZZ	4720011557784	7X677	9438257	HOSE,NONMETALLIC 1/2 O.D. X 1/4 I.D.,50 FT LONG.....	V
27	PAOZZ	4720004910102	96906	MS521301A203R	HOSE,NONMETALLIC STRAIGHT,ENGINE	V
* 28	PAOZZ	4720005558015	96906	MS521302B206R	HOSE,NONMETALLIC COOLANT.....	V
29	PAOZZ		81349	M23053/4-202-2	INSULATION SLEEVING.....	V
30	PAOZZ		81349	M23053/4-203-2	INSULATION SLEEVING.....	V
* 31	PAOZZ	5970011616796	81349	M23053/4-302-0	INSULATION SLEEVING.....	V
32	PAOZZ		81349	M23053/4-302-2	INSULATION SLEEVING.....	V

(1) ITEM NO	(2) SMR CODE	(3) NSN	(4) CAGEC	(5) PART NUMBER	(6) DESCRIPTION AND USABLE ON CODES(UOC)	(7) QTY
33	PAOZZ	5970011422282	81349	M23053/4-303-0	INSULATION SLEEVING ELECTRICAL, BLACK (12 OR 14-14 AWG)	V
34	PAOZZ		81349	M23053/4-303-2	INSULATION SLEEVING.....	V
* 35	PAOZZ	5970011631103	81349	M23053/4-304-0	INSULATION SLEEVING.....	V
36	PAOZZ		81349	M23053/4-304-2	INSULATION SLEEVING.....	V
* 37	PAOZZ	5970007241910	81349	M23053/6-103-6	INSULATION SLEEVING.....	V
* 38	PAOZZ	5970010499948	81343	M23053/6-104-2	INSULATION SLEEVING.....	V
* 39	PAOZZ	5970010310736	81349	M23053/6-107-0	INSULATION SLEEVING.....	V
* 40	PAOZZ	5970007241907	81349	M23053/6-107-1	INSULATION SLEEVING.....	V
* 41	PAOZZ	5970012767753	81343	M23053/15-112-0	INSULATION SLEEVING.....	V
42	PAOZZ		81349	M23053/15-112-2	INSULATION SLEEVING.....	V
43	PAOZZ	2590011967281	19207	12339902-1	PAD,CUSHIONING 3/8 THICK, 9/32 WIDE, 800 FT LONG.....	V
44	PAOZZ	2590013127355	28818	CF40BH52	PAD,CUSHIONING 50 YARDS X 54 INCHES WIDE X 1 INCH THICK.....	V
45	PAOZZ	4710012282177	81346	D1785	PIPE,PLASTIC.....	V
46	PAOZZ	5330012914615	34623	5741221	PLASTIC STRIP 1/4 THICK, 1/2 WIDE, 20 FT LONG.....	V
47	PAOZZ	5530006416069	81349	MIL-P-18066	PLYWOOD,CONSTRUCTIO 3/4 THICK.....	V
48	PAOZZ	5530002628195	81348	NN-P-530	PLYWOOD,CONSTRUCTIO 1/2 THICK, 48 INCHES WIDE, 8 FT LONG.....	V
49	PAOZZ	4010012930586	81349	MIL-W-83420/2-002	ROPE,WIRE .062-INCH DIAMETER.....	V
50	PAOZZ	4010009290041	39428	8930T31	ROPE,WIRE.....	V
51	PAOZZ	5330011983521	19207	12340721	RUBBER STRIP ETHYLENE PROPYLENE TERPOLYMER, ASTM 0-1056-68.38 X 40 X 10 INCHES.....	V
52	PAOZZ	5330012816523	82942	68-412121-1	SEAL,NONMETALLIC SP .250 THICK,1/2 WIDE, 50 FT LONG.....	V
53	PAOZZ	5330013218622	41024	21022103	SEAL,NONMETALLIC SP SPECIAL, EDPM WIRE CARRIER, 396 FT LONG.....	V
54	PAOZZ	5330012131312	06968	1403	SEAL,NONMETALLIC SP SPECIAL, EDPM RUBBER, WIRE CARRIER, 18 FT LONG....	V
55	PAOZZ	5330013117953	76385	IC006197	SEAL,NONMETALLIC SP.....	V
56	PAOZZ		81343	R-495-T	SEAL,NONMETALLIC SP.....	V
57	PAOZZ	5330014091981	19207	12460108-3	SEAL,NONMETALLIC SP..... ASSEMBLY,FABRICATE FROM P/N Y-9485, 13 INCHES LONG.....	V
58	PAOZZ	9320011552369	45152	4965	TAPE,ADHESIVE,RUBBE RUBBER DOUBLE COATED, NEOPRENE, 3/4 X .45 X 108 FT LONG.....	V
59	PAOZZ		19207	12339376-1	TAPE,PRESSURE SENSI.....	V
60	PAOZZ		81343	15618240	TUBE.....	V
61	PAOZZ	4720010587213	19207	CPR104420-1	TUBING,NONMETALLIC PLASTIC, .170	V
* 62	PAOZZ	4720010144915	19207	CPR104420-2	TUBING,NONMETALLIC..... INCH I.D., .250 INCH O.D.....	V
* 63	PAOZZ	4720000060048	81349	M6855/4-16H029	TUBING,NONMETALLIC.....	V
64	PAOZZ	4720014219718	19207	12420924-004	TUBING,NONMETALLIC.....	V
65	PAOZZ	9330000112000	00624	AE208-10	TUBING,PLASTIC,SPIR.....	V
66	PAOZZ	9330012521239	81349	B47287-II-1/2	TUBING,PLASTIC,SPIR OIL COOLANT LINES,.50 I.D.,.850 O.D.,100 FT LONG	V
67	PAOZZ	6145013419591	81349	M13486/1-4	WIRE,ELECTRICAL.....	V

(1) ITEM NO	(2) SMR CODE	(3) NSN	(4) CAGEC	(5) PART NUMBER	(6) DESCRIPTION AND USABLE ON CODES(UOC)	(7) QTY
68	PAOZZ	6145005388222	81349	M13486/1-9	WIRE,ELECTRICAL.....	V
69	PAOZZ	6145005388219	81349	M13486/1-11	WIRE,ELECTRICAL 4 AWG, SINGLE CONDUCTOR.....	V
70	PAOZZ	6145007056674	81349	M13486/1-14	WIRE,ELECTRICAL 0 AWG, SINGLE CONDUCTOR.....	V
71	PAOZZ	5510002706031	97403	13219E0079	WOOD LAMINATE,DECKI DECKING.....	V
72	PAOZZ		19207	12339317-1	WRAP.....	V

END OF FIGURE

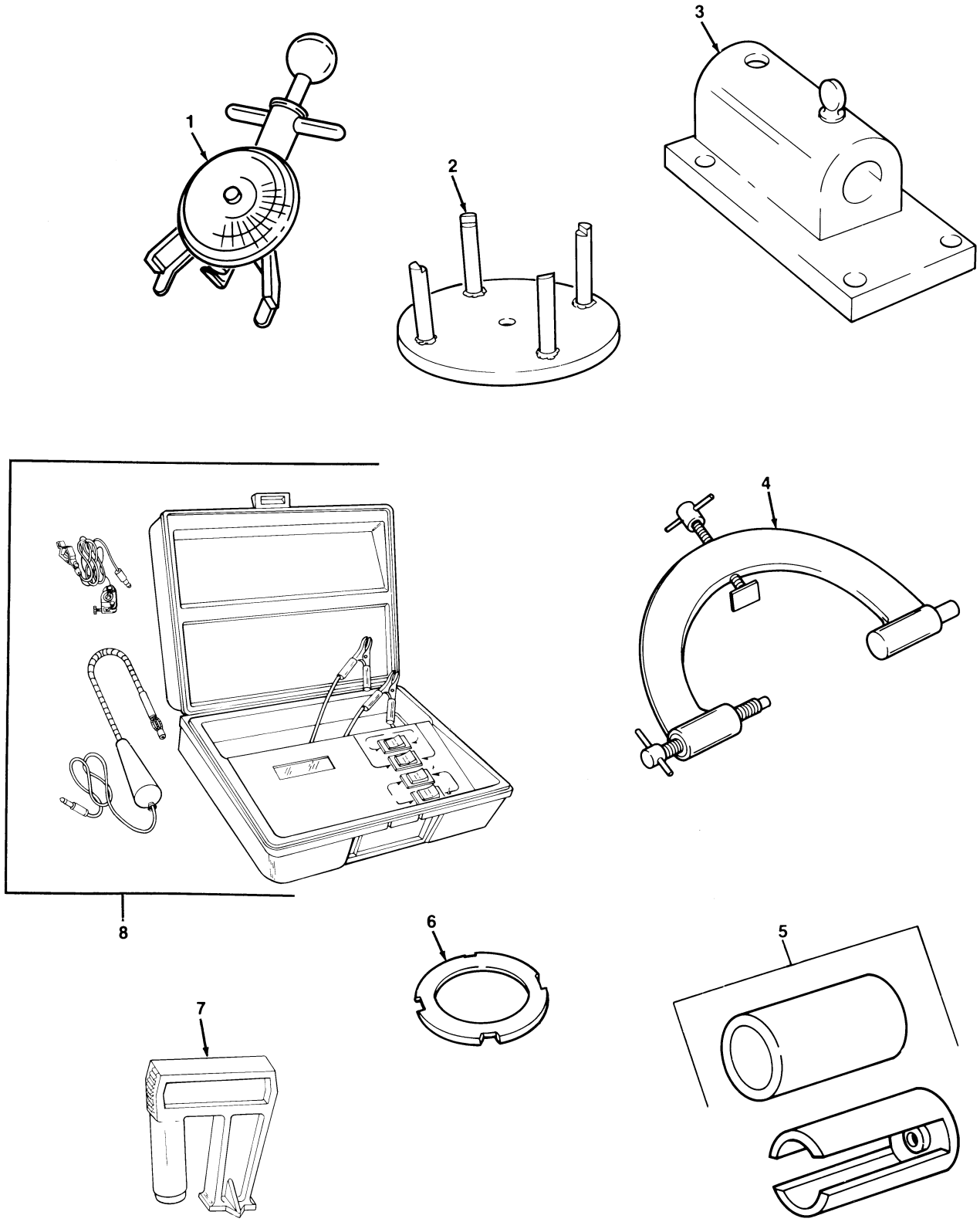

Figure 499. Special Tools, Drive Belts and Transmission.

(1) ITEM NO	(2) SMR CODE	(3) NSN	(4) CAGEC	(5) PART NUMBER	(6) DESCRIPTION AND USABLE ON CODES(UOC)	(7) QTY
					GROUP 26 TOOL AND TEST EQUIPMENT 2604 SPECIAL TOOLS	
					FIG. 499 SPECIAL TOOLS, DRIVE BELTS AND TRANSMISSION	
1	PEOZZ	6635010933710	33287	BT-33-73F	TENSIOMETER,DIAL IN BOI: SEE PARA. 5.I, PART OF KIT P/N 57K0267.....	
2	PEHZZ	5120012108793	33287	J4670-01	COMPRESSOR,CLUTCH,S SPRING,BOI: SEE PARA. 5.I, PART OF KIT P/N 57K0266.....	
3	PEHZZ	5120011444484	33287	J3289-20	BASE,HOLDING FIXTUR TRANSMISSION, BOI: SEE PARA. 5.I, PART OF KIT P/N 57K0266.....	
* 4	PEHZZ	5120011987583	33287	J8763-0B	HOLDING FIXTURE,TRA TRANSMISSION, BOI: SEE PARA. 5.I, PART OF KIT P/N 57K0266.....	
5	PEHZZ	4910011788865	25341	J21795-02	HOLDING UNIT,GEAR TRANSMISSION,BOI: SEE PARA. 5.I, PART OF KIT P/N 57K0266.....	
6	PEHZZ	4910012101318	33287	J21664	ADAPTER,COMPRESSOR CLUTCH SPRING, BOI: SEE PARA.,5.I, PART OF KIT P/N 57K0266.....	
7	PEFZZ	4910012313671	55719	MT95	GAGE,TIMING,DIESEL BOI: SEE PARA. 5.I, PART OF KIT P/N 57K0268.....	
8	PEFZZ	5180011863114	33287	J33127	TOOL KIT,ENGINE TIM DYNAMIC,BOI: SEE PARA. 5.I, PART OF KIT P/N 57K0268.....	

END OF FIGURE

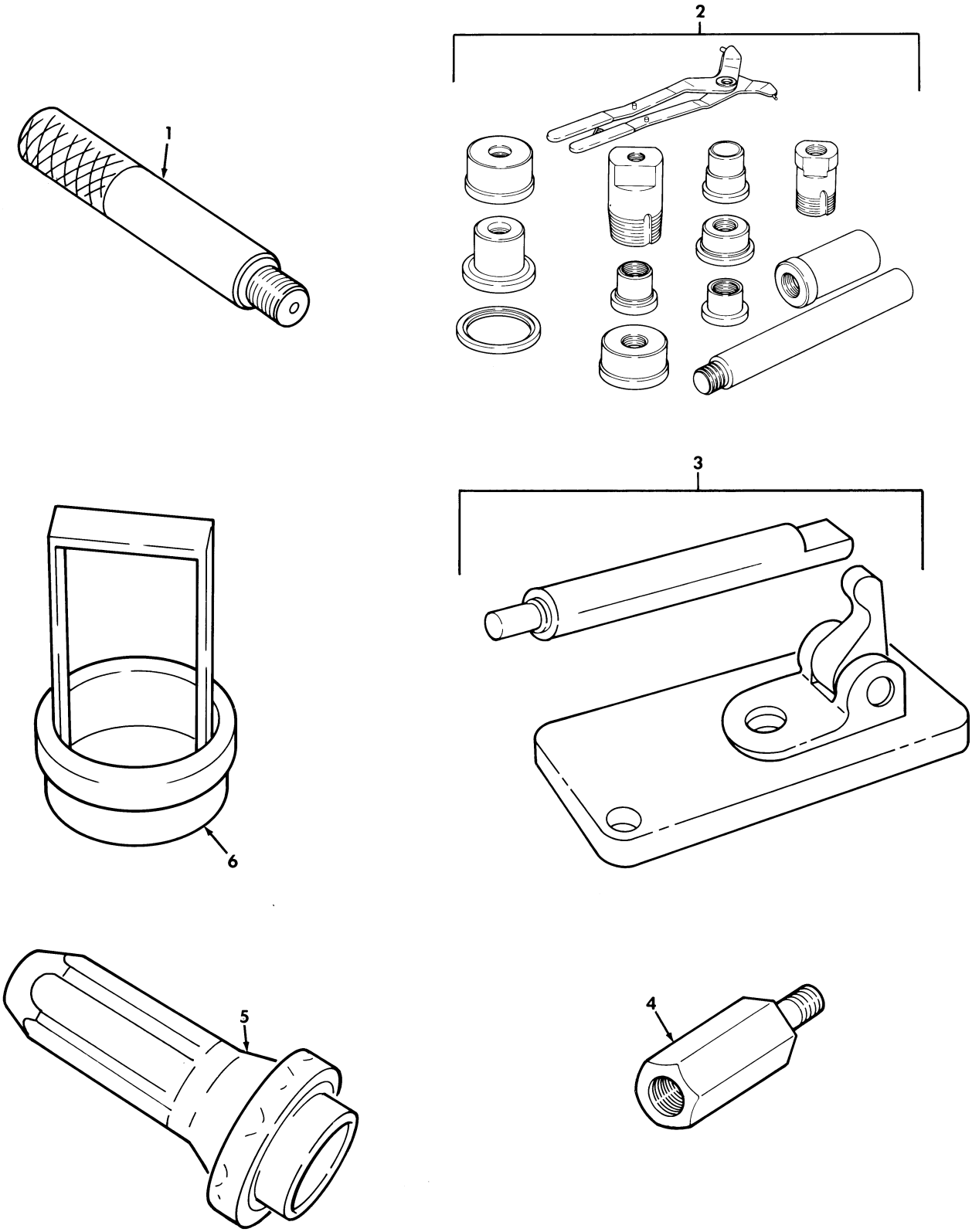

Figure 500. Special Tools, Transmission.

(1) ITEM NO	(2) SMR CODE	(3) NSN	(4) CAGEC	(5) PART NUMBER	(6) DESCRIPTION AND USABLE ON CODES(UOC)	(7) QTY
					GROUP 2604 SPECIAL TOOLS	
					FIG. 500 SPECIAL TOOLS,TRANSMISSION	
1	PEOZZ	5120006772259	33287	J8092	HANDLE,DRIVE TRANSMISSION,BOI: SEE PARA. 5.I, PART OF KIT P/N 57K0267.	
2	PEHZZ	5180011959777	33287	J21465-01	TOOL SET,BUSHING,SE TRANSMISSION, BOI: SEE PARA. 5.I, PART OF KIT P/N 57K0266.....	
3	PEHZZ	4910011780722	25341	J-21370	GAGE,PIN SELECTOR BAND APPLY,BOI: SEE PARA. 5.I, PART OF KIT P/N 57K0266.....	
4	PEHZZ	5120011308865	33287	J6471-2	HANDLE,SLIDE HAMMER SLIDE HAMMER, 5/8-16, 3/8-16,BOI: SEE PARA. 5.I, PART OF KIT P/N 57K0266.....	
5	PEFZZ	5120011761845	25341	J21359-A	INSTALLER,OIL SEAL TRANSMISSION OIL PUMP,BOI: SEE PARA. 5.I, PART OF KIT P/N 57K0268.....	
6	PEHZZ	4910012090729	33287	J24396	TOOL,ALIGNMENT,CLUT INTERMEDIATE, BOI: SEE PARA. 5.I, PART OF KIT P/N 57K0266.....	

END OF FIGURE

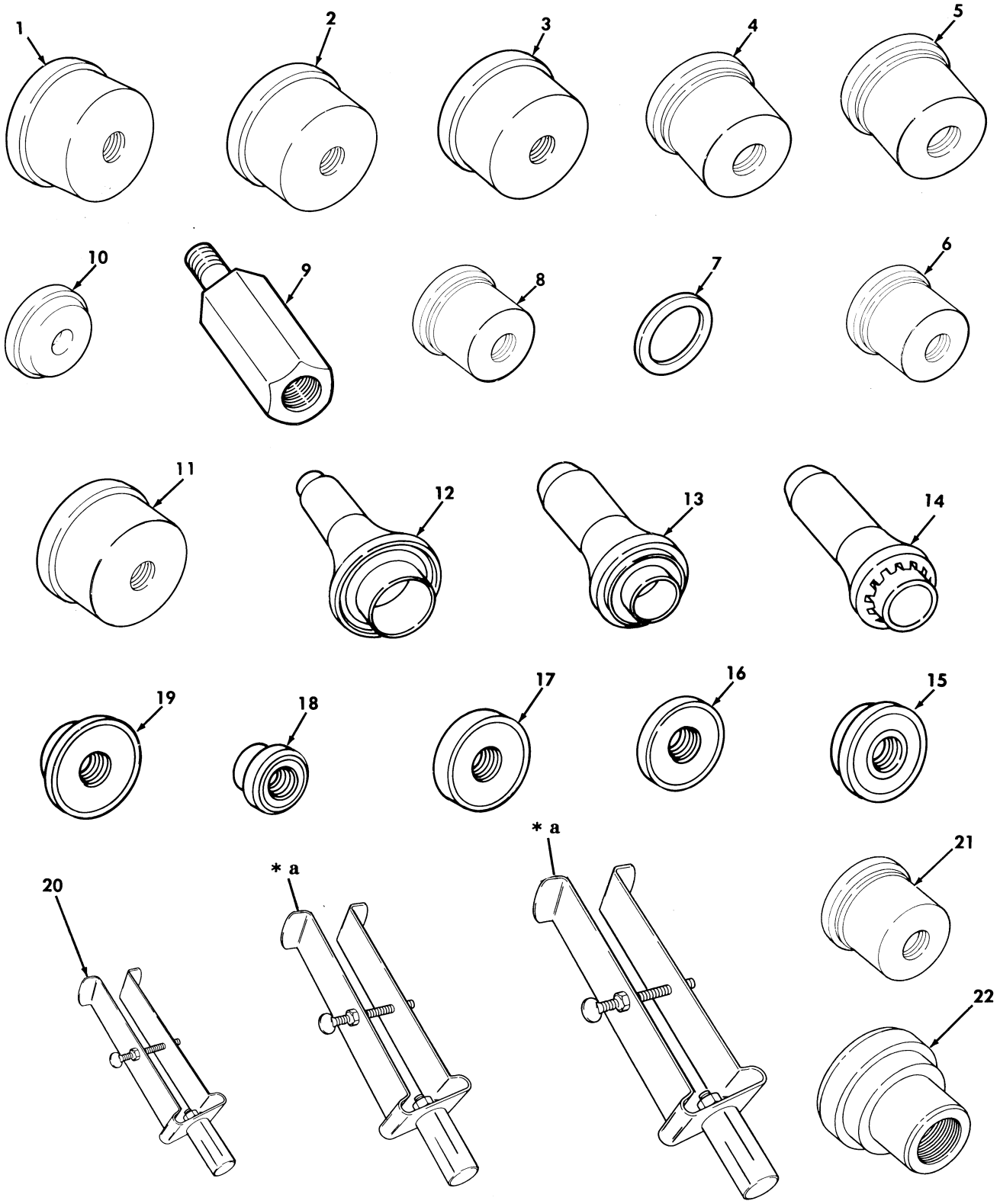

* a PART OF ITEM 20

Figure 501. Special Tools, Transfer Case.

(1) ITEM NO	(2) SMR CODE	(3) NSN	(4) CAGEC	(5) PART NUMBER	(6) DESCRIPTION AND USABLE ON CODES(UOC)	(7) QTY
					GROUP 2604 SPECIAL TOOLS	
					FIG. 501 SPECIAL TOOLS,TRANSFER CASE	
1	PEHZZ	5120011960084	33287	J29166	INSERTER,BEARING AN REAR OUTPUT, BOI: SEE PARA. 5.I, PART OF KIT P/N 57K0266.....	
2	PEHZZ	5120011694876	25341	J-29168	INSERTER,BEARING AN FRONT OUTPUT, BOI: SEE PARA. 5.I, PART OF KIT P/N 57K0266.....	
3	PEHZZ	5120011703278	25341	J-29167	INSERTER,BEARING AN BOI: SEE PARA. 5.I,PART OF KIT P/N 57K0266.....	
4	PEHZZ	5120011952721	33287	J29163	INSERTER,BEARING AN FRONT OUTPUT SHAFT REAR BEARING,BOI: SEE PARA. 5.I, PART OF KIT P/N 57K0266.....	
5	PEHZZ	5120011857955	33287	J29169	INSERTER,BEARING AN INPUT GEAR,BOI: SEE PARA. 5.I, PART OF KIT P/N 57K0266.....	
6	PEHZZ	5120012654872	33287	J-35307	INSERTER,BEARING AN MAINSHAFT,BOI: SEE PARA. 5.I, PART OF KIT P/N 57K0266.....	
7	PEHZZ	5120012476629	33287	J29185-2	INSTALLER,ANNULUS B ANNULUS GEAR BUSHING,BOI: SEE PARA. 5.I, ...	
8	PEHZZ	5120011857956	33287	J29185	INSERTER,BEARING AN BOI: SEE PARA. 5.I PART OF KIT P/N 57K0266...	
9	PEHZZ	5120013915131	33287	J6471-8	ADAPTER MECHANIAL SLIDE HAMMER,5/8-18 1/2-13,BOI: SEE PARA. 5.I,PART OF KIT P/N 57K0266.....	
10	PEHZZ	5120011858024	33287	J7818	INSERTER,BEARING AN RETAINER,BOI: SEE PARA. 5.I, PART OF KIT P/N 57K0266.....	
11	PEHZZ	5120011954551	33287	J29170	REMOVER,BEARING INPUT GEAR,BOI: SEE PARA. 5.I, PART OF KIT P/N 57K0266.....	
12	PEHZZ	5120013573632	33287	J-33831	INSERTER,SEAL INPUT GEAR SEAL,BOI: SEE PARA. 5.I PART OF KIT P/N 57K0266.....	
13	PEHZZ	5120012271680	33287	J-22661	INSTALLER,SEAL OUTPUT SHAFT,BOI: SEE PARA. 5.I,PART OF KIT P/N 57K0236,PART OF KIT P/N 57K0268.....	
14	PEHZZ	5120013613101	33287	J-33843	INSERTER,SEAL EXTENSION HOUSING SEAL,BOI: SEE PARA. 5.I. PART OF KIT P/N 57K0236 PART OF KIT P/N 57K0266	
15	PEHZZ	5120013573633	33287	J-33826	INSERTER AND REMOVE BEARING INSTALLER,BOI: SEE PARA. 5.I. PART OF KIT P/N 57K0236 PART OF KIT P/N 57K0266.....	
16	PEHZZ	5120013573629	33287	J-33829	INSERTER,BEARING AN MAINSHAFT PILOT BEARING,BOI: SEE PARA. 5.I. PART OF KIT P/N 57K0236.....	
17	PEHZZ	5120013573630	33287	J-33833	INSERTER,BEARING AN OUTPUT SHAFT FRONT BEARING,BOI: SEE PARA. 5.I. PART OF KIT P/N 57K0236 PART OF KIT	

(1) ITEM NO	(2) SMR CODE	(3) NSN	(4) CAGEC	(5) PART NUMBER	(6) DESCRIPTION AND USABLE ON CODES(UOC)	(7) QTY
					P/N 57K0266.....	
18	PEHZZ	5120013573631	33287	J-33839	REMOVER,BEARING AND EXTENSION HOUSING BUSHING,BOI: SEE PARA. 5.I. PART OF KIT P/N 57K0236 PART OF KIT P/N 57K0266.....	
19	PEHZZ	5120013579123	33287	J-9276-3	INSERTER,BEARING AN BOI: SEE PARA. 5.I. PART OF KIT P/N 57K0236 PART OF KIT P/N 57K0266.....	
20	PEHZZ	5120012017857	33287	J29369	PULLER,MECHANICAL UNIVERSAL BUSHING AND BEARING,BOI: SEE PARA. 5.I, PART OF KIT P/N 57K0266.....	
21	PEHZZ	5120011857960	33287	J29174	INSERTER,BEARING AN BOI: SEE PARA. 5.1 PART OF KIT P/N 57K0266.....	
22	PEHZZ	5120013899992	33287	J39636	INSERTER,BEARING AN BOI: SEE PARA. 5.1, PART OF KIT P/N 57K0236 PART OF KIT P/N 57K0266.....	

END OF FIGURE

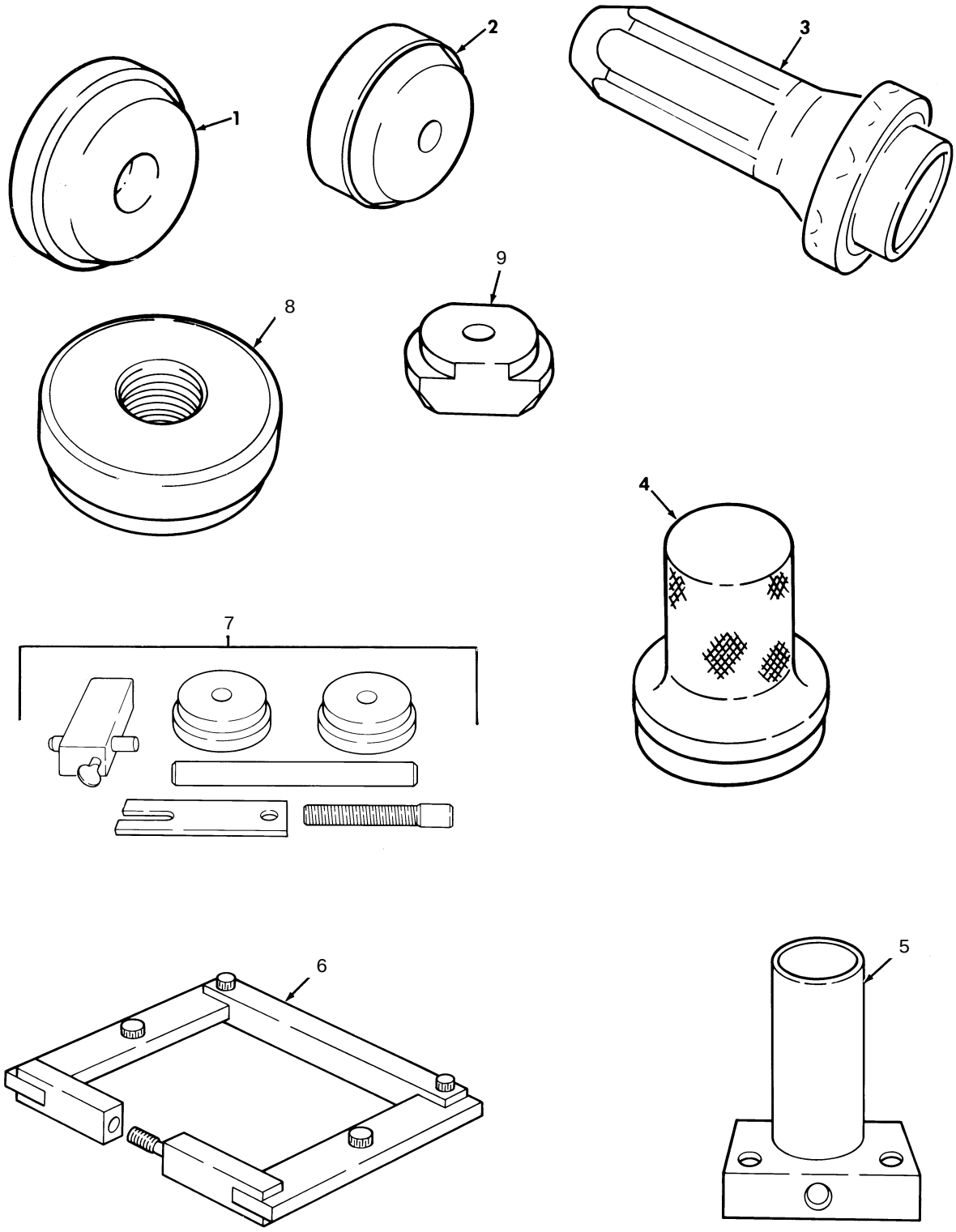

Figure 502. Special Tools, Axle Differential.

(1) ITEM NO	(2) SMR CODE	(3) NSN	(4) CAGEC	(5) PART NUMBER	(6) DESCRIPTION AND USABLE ON CODES(UOC)	(7) QTY
					GROUP 2604 SPECIAL TOOLS	
					FIG. 502 SPECIAL TOOLS,AXLE DIFFERENTIAL	
1	PEHZZ	5120011873660	33287	J21787	REMOVER,BEARING AND BOI: SEE PARA. 5.I PART OF KIT P/N 57K0266.....	
2	PEHZZ	5120011857964	33287	J8611-01	INSERTER,BEARING AN BOI: SEE PARA. 5.I PART OF KIT P/N 57K0266.....	
3	PEFZZ	4910011795530	25341	J-29162	DRIVE TOOL,SEAL BOI: SEE PARA 5.I PART OF KIT P/N 57K0268.....	
4	PEFZZ	5120011873659	33287	J33142	INSERTER,BEARING AN BOI: SEE PARA. 5.I PART OF KIT P/N 57K0268.....	
5	PEHZZ	5120012188235	33287	J-33149-A	ADAPTER,AXLE FIXTUR PART OF KIT P/N 57K0266.....	
6	PEHZZ	4910001052823	80604	W-129-B	SPREADER,AXLE HOUSI PART OF KIT P/N 57K0266.....	
7	PEHZZ	5180012168643	33287	J-35199	TOOL KIT,PINION SETTING GAUGE,BOI: SEE PARA. 5.I,PART OF KIT P/N 57K0266.....	
8	PEHZZ	5120011857962	33287	J8608	INSERTER,BEARING AN PART OF KIT P/N 57K0266.....	
9	PEHZZ	5120011857957	33287	J21786	REMOVER,BEARING AND PART OF KIT P/N 57K0266.....	

END OF FIGURE

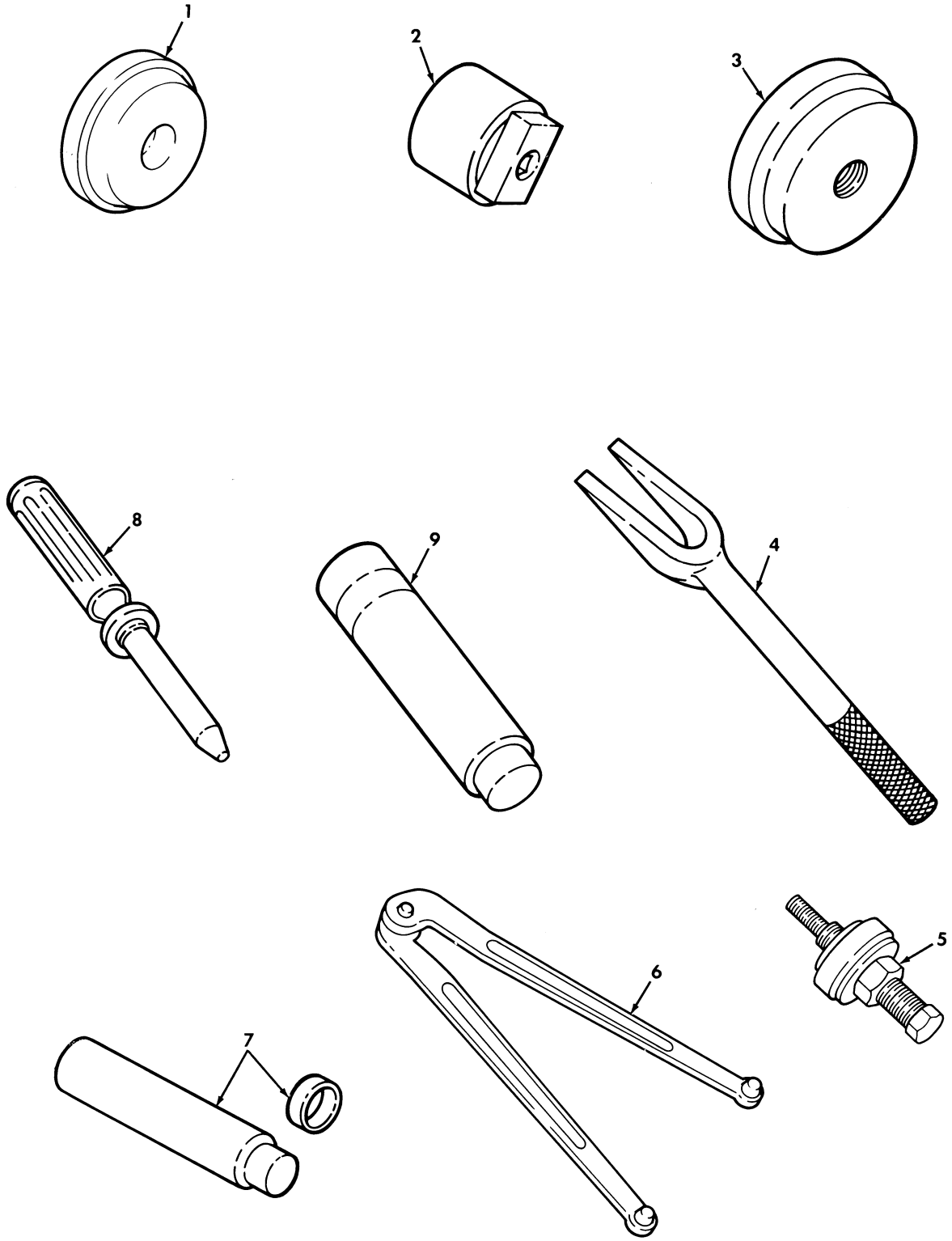

Figure 503. Special Tools, Geared Hub and Steering.

(1) ITEM NO	(2) SMR CODE	(3) NSN	(4) CAGEC	(5) PART NUMBER	(6) DESCRIPTION AND USABLE ON CODES(UOC)	(7) QTY
					GROUP 2604 SPECIAL TOOLS	
					FIG. 503 SPECIAL TOOLS,GEARED HUB AND STEERING	
1	PEOZZ	5120011873607	33287	J33143	INSERTER,SEAL GEARED HUB INPUT,BOI: SEE PARA. 5.I, PART OF KIT P/N 57K0267.....	
2	PEOZZ	5120011857963	33287	J33144	SOCKET,SOCKET WRENC GEARED HUB,BOI: SEE PARA. 5.I, PART OF KIT P/N 57K0267.....	
3	PEOZZ	5120012290842	33287	J35184	INSERTER,SEAL GEARED HUB,BOI: SEE PARA. 5.I, PART OF KIT P/N 57K0267.	
4	PEOZZ	5120008804268	19207	11595179	REMOVAL TOOL,TIE RO BALL JOINTS, BOI: SEE PARA. 5.I, PART OF KIT P/N 57K0267.....	
5	PEOZZ	4910011792517	33287	J25033-B	INSTALLER,POWER STE POWER STEERING PUMP PULLEY,BOI: SEE PARA. 5.I PART OF KIT P/N 57K0267.....	
6	PEFZZ	5120010826436	25341	J7624	WRENCH,SPANNER PRELOAD BEARING STEERING GEAR,BOI: SEE PARA. 5.I, PART OF KIT P/N 57K0268.....	
7	PEFZZ	5120010826447	25341	J-6278	INSTALLING AND REMO PITMAN SHAFT BEARING,BOI: SEE PARA. 5.I, PART OF KIT P/N 57K0268.....	
8	PEFZZ	5120011791032	33287	J-21552	PUNCH,HAND TOOL RACK PISTON STEERING GEAR,BOI: SEE PARA. 5.I, PART OF KIT P/N 57K0268.....	
9	PEFZZ	5120011857965	33287	J-6221	REMOVER,BEARING BEARING ADJUSTER PLUG,BOI: SEE PARA. 5.I,PART OF KIT P/N 57K0268.....	

END OF FIGURE

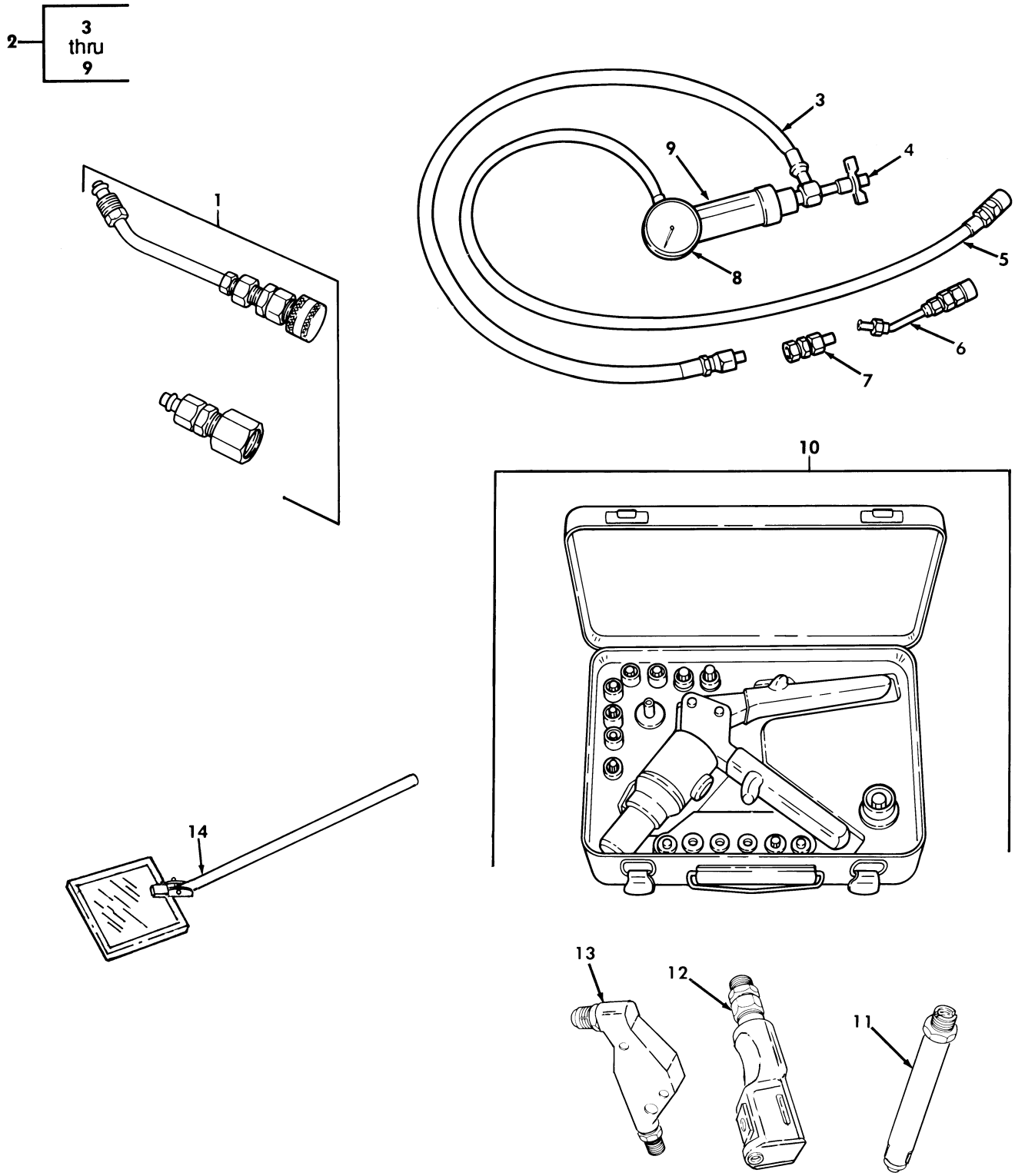

Figure 504. Special Tools, Steering Pump Body, and Speedometer Drive.

(1) ITEM NO	(2) SMR CODE	(3) NSN	(4) CAGEC	(5) PART NUMBER	(6) DESCRIPTION AND USABLE ON CODES(UOC)	(7) QTY
					GROUP 2604 SPECIAL TOOLS	
					FIG. 504 SPECIAL TOOLS,STEERING PUMP,BODY,AND SPEEDOMETER DRIVE	
1	PEOZZ	5120012311709	33287	J33141	ADAPTER,ANALYZER BOI: SEE PARA. 5.I PART OF KIT P/N 5705568.....	
2	PEOOO	4910011857966	19207	12342943	ANALYZER,POWER STEE BOI:SEE PARA. 5.I PART OF KIT P/N 57K0267.....	
3	PEOZZ	4720012532809	33287	J25323-17	.HOSE ASSEMBLY,NONME BOI: SEE PARA. 5.I PART OF KIT P/N 12342943..	
4	PEOZZ	4820012526169	33287	J25323-16	.VALVE,REGULATING,FL BOI: SEE PARA. 5.I PART OF KIT P/N 12342943..	
5	PEOZZ	4720012532810	33287	J25323-18	.HOSE ASSEMBLY,NONME BOI: SEE PARA. 5.I PART OF KIT P/N 12342943..	
6	PEOZZ	4730012546023	33287	J25323-2	.COUPLING HALF,QUICK BOI: SEE PARA. 5.1 PART OF KIT P/N 12342943..	
7	PEOZZ	3020012552906	33287	J25323-1	.ADAPTER,GEAR BOI: SEE PARA. 5.I PART OF KIT P/N 12342943.....	
8	PEOZZ	6685012563406	33287	J25323-5	.GAGE,PRESSURE,DIAL BOI: SEE PARA. 5.I PART OF KIT P/N 12342943.....	
9	PEOZZ	6680012536782	33287	J25323-7	.INDICATOR,RATE OF F BOI: SEE PARA. 5.I PART OF KIT P/N 12342943..	
10	PEOZZ	5180012014978	64878	D100-MIL-1	TOOL KIT,BLIND RIVE BOI: SEE PARA. 5.I, PART OF KIT P/N 57K0267.....	
11	PEFZZ	5130011045370	11815	H749A-456	PULLING HEAD,RIVET BOI: SEE PARA. 5.I,PART OF KIT P/N 57K0268.....	
12	PEFZZ	5130010447196	53551	RU818	PULLING HEAD,RIVET BOI: SEE PARA. 5.I,PART OF KIT P/N 57K0268.....	
13	PEFZZ	5130010453507	53551	RU817	PULLING HEAD,RIVET RIGHT ANGLE,BOI: SEE PARA. 5.I,PART OF KIT P/N 57K0268.....	
14	PEOZZ	5120006186902	77335	71-510	MIRROR,INSPECTION SPEEDOMETER DRIVE,BOI: SEE PARA.5.I, PART OF KIT P/N 57K0267.....	

END OF FIGURE

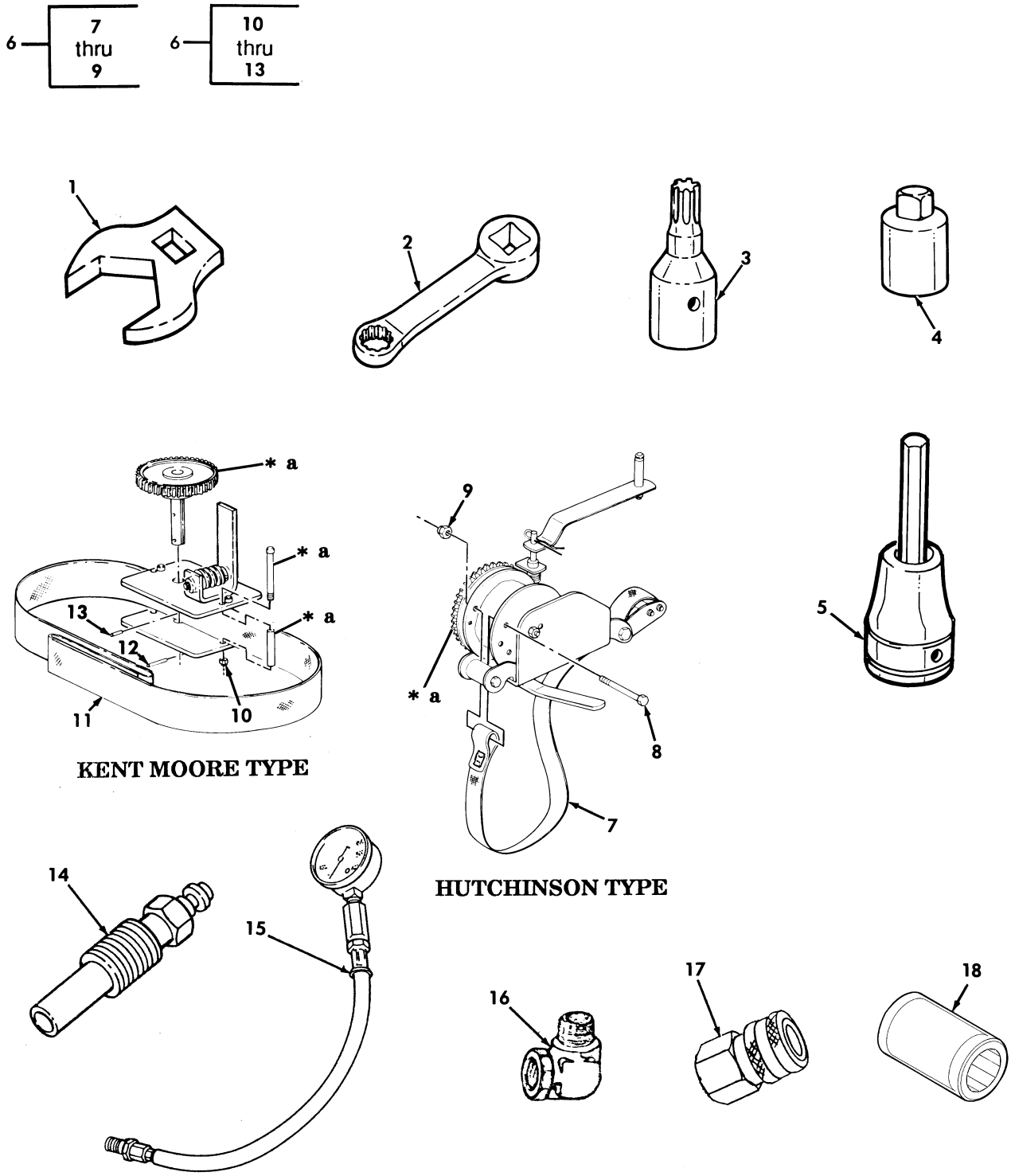

* a PART OF ITEM 6

Figure 505. Special Tools, Multipurpose.

(1) ITEM NO	(2) SMR CODE	(3) NSN	(4) CAGEC	(5) PART NUMBER	(6) DESCRIPTION AND USABLE ON CODES(UOC)	(7) QTY
					GROUP 2604 SPECIAL TOOLS	
					FIG. 505 SPECIAL TOOLS,MULTIPURPOSE	
1	PEOZZ	5120013351094	55719	FC18B	CROWFOOT ATTACHMENT 9/16, 3/8 DRIVE,BOI: SEE PARA. 5.I PART OF KIT P/N 57K0267.....	
1	PEOZZ	5120013351096	55719	FC22A	CROWFOOT ATTACHMENT 11/16,3/8 DRIVE,BOI: SEE PARA.5.I, PART OF KIT P/N 57K0267.....	
1	PEOZZ	5120013351099	55719	FC28B	CROWFOOT ATTACHMENT 7/8,3/8 DRIVE, BOI: SEE PARA.5.I, PART OF KIT P/N 57K0267.....	
1	PEOZZ	5120010798023	33287	J-35158	CROWFOOT ATTACHMENT 1/2,3/8 DRIVE, BOI: SEE PARA. 5.I, PART OF KIT P/N 57K0267.....	
1	PEOZZ	5120013351100	55719	FC30B	CROWFOOT ATTACHMENT 15/16,3/8 DRIVE,BOI: SEE PARA.5.I, PART OF KIT P/N 57K0267.....	
1	PEOZZ	5120001848398	55719	AN8506-4	CROWFOOT ATTACHMENT 5/8,3/8 DRIVE, BOI: SEE PARA.5.I, PART OF KIT P/N 57K0267.....	
2	PEOZZ	5120013673582	55719	SRES18	ADAPTER,TORQUE WREN 9/16,BOI: SEE PARA.5.I, PART OF KIT P/N 57K0267..	
2	PEOZZ	5120013673585	55719	SRES24	ADAPTER,TORQUE WREN 3/4,BOI: SEE PARA.5.I, PART OF KIT P/N 57K0267..	
3	PEFZZ	5120012273159	33234	TLE60	SOCKET,SOCKET WRENC 1/4 DRIVE,BOI: SEE PARA.5.I, PART OF KIT P/N 57K0268.....	
4	PEOZZ	5120002408702	19207	11655788-2	ADAPTER,SOCKET WREN 3/8 DRIVE TO 1/2 DRIVE,BOI: SEE PARA.5.I, PART OF KIT P/N 57K0267.....	
5	PEOZZ	5120006838597	96508	TW6B	DRIVER,HEXAGON HEAD 3/16,3/8 DRIVE, BOI: SEE PARA. 5.I,PART OF KIT P/N 57K0267.....	
5	PEOZZ	5120014373658	55719	FAM7E	DRIVER,HEXAGON HEAD 7 MM,3/8 DRIVE, BOI: SEE PARA. 5.I,PART OF KIT P/N 57K0267.....	
6	PEOZZ	5120013355847	19207	12342688	RUNFLAT TOOL COMPRESSION,BOI: SEE PARA. 5.I,PART OF KIT P/N 57K0267...	
7	KFOZZ		62161	528236-05	.STRAP ASSEMBLY RUNFLAT TOOL BOI: SEE PARA. 5.I,PART OF KIT P/N 528240	
8	KFOZZ		62161	1118BAC1048	.BOLT BOI: SEE PARA. 5.I,PART OF KIT P/N 528240.....	
9	KFOZZ		62161	1351BAC10SL	.NUT,SELF-LOCKING RUNFLAT TOOL BOI: SEE PARA. 5.I,PART OF KIT P/N 528240	
10	KFOZZ		33287	RS-3400-135	.HEXAGON LOCKNUT BOI: SEE PARA. 5.I PART OF KIT P/N J-39295.....	
11	KFOZZ		33287	J-39250-1	.STRAP ASSEMBLY BOI: SEE PARA. 5.I, PART OF KIT P/N J-39295.....	
12	KFOZZ		33287	RS-5701-795	.PIN,SMALL BOI: SEE PARA. 5.I,PART OF KIT P/N J-39295.....	
13	KFOZZ		33287	RS-700-125	.PIN,SHAFT BOI: SEE PARA. 5.I,PART	

(1) ITEM NO	(2) SMR CODE	(3) NSN	(4) CAGEC	(5) PART NUMBER	(6) DESCRIPTION AND USABLE ON CODES(UOC)	(7) QTY
					OF KIT P/N J-39295.....	
14	PEFZZ	4910012382551	33287	J26999-30	ADAPTER,CYLINDER CO BOI: SEE PARA.5.1 PART OF KIT P/N 57K0268.... UOC:HVY,H11,H13,H14,H15,H16,H17,H18, H20,H21,H24,H25,H26,H27,H28	
15	PEFZZ	4910007856437	33287	J6692	TESTER,CYLINDER COM CYLINDER COMPRESSION,BOI: SEE PARA.5.1 PART OF KIT P/N 57K0268.....	
16	PEFZZ	4730009854804	96906	MS51815-4P	ELBOW,PIPE TO TUBE BOI: SEE PARA.5.1 PART OF KIT P/N 57K0268....	
* 17	PEFZZ	4730010425266	33287	J-35209	COUPLING HALF,QUICK BOI: SEE PARA.. 5.I,PART OF KIT P/N 57K0268.....	
* 18	PEOZZ	5120002771463	80244	5120-00-277-1463	SOCKET,SOCKET WRENCH 3/8,3/8 DRIVE DEEPWELL,BOI: SEE PARA. 5.I,PART OF KIT P/N 57K0267.....	
	PAOZZ	2530013383056	33287	J-39295	REPAIR KIT,BELT RUNFLAT.....	
	PAOZZ	4310013455723	62161	528240	REPAIR KIT,BELT RUNFLAT.....	

END OF FIGURE

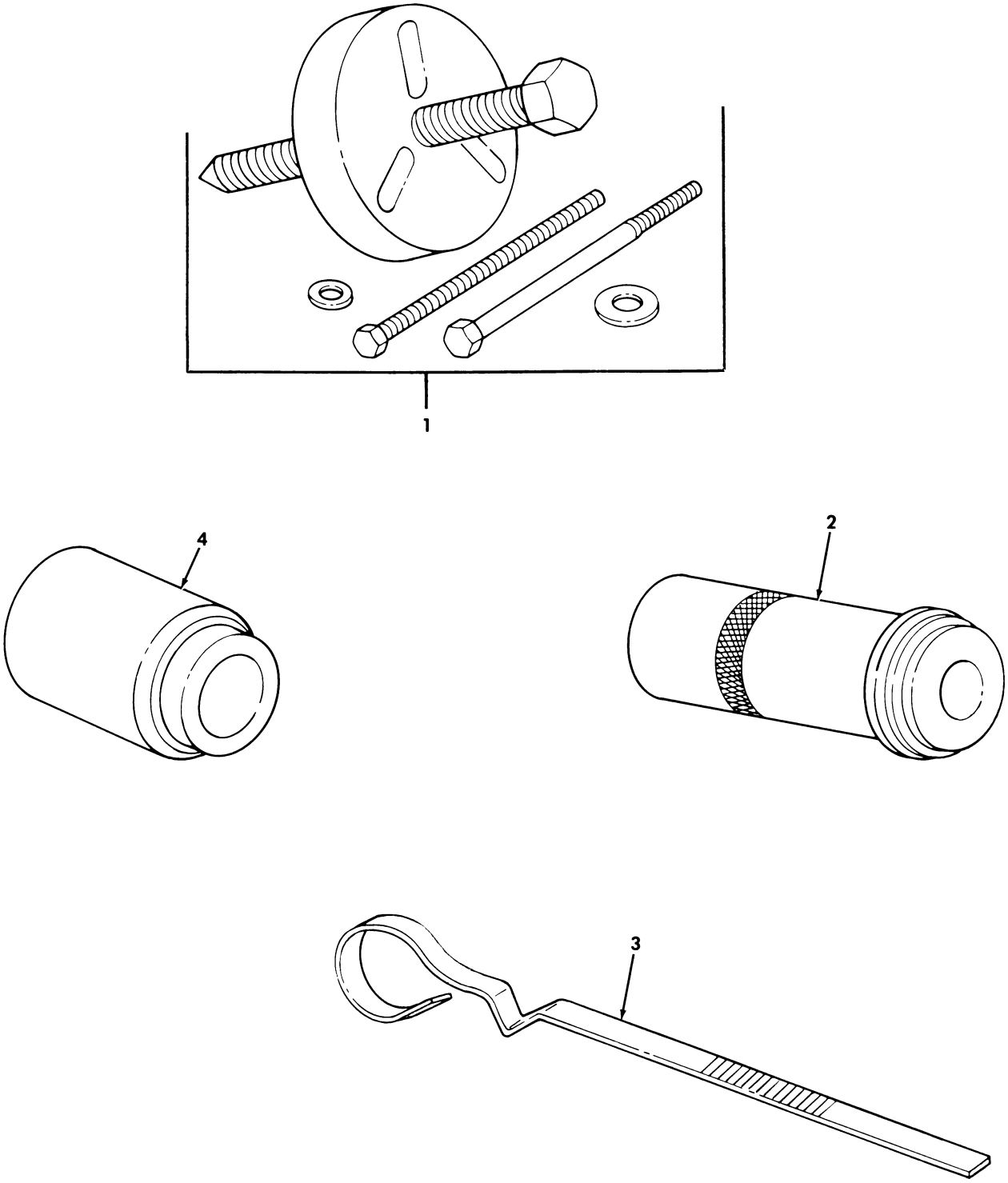

Figure 506. Special Tools, Air Conditioner Compressor.

(1) ITEM NO	(2) SMR CODE	(3) NSN	(4) CAGEC	(5) PART NUMBER	(6) DESCRIPTION AND USABLE ON CODES(UOC)	(7) QTY
					GROUP 2604 SPECIAL TOOLS	
					FIG. 506 SPECIAL TOOLS,AIR CONDITIONER COMPRESSOR	
1	PEFZZ	5120013734982	25341	43305	PULLER,MECHANICAL PART OF KIT P/N J-29642-C.....	
2	PEFZZ	5120013734989	25341	42109	INSERTER AND REMOVE PULLEY BEARING, PART OF IT P/N J-29642-C.....	
3	PEFZZ	6680013725748	25341	41102	GAGE ROD,LIQUID LEV PART OF KIT P/N J-29642-C.....	
4	PEFZZ	5120013735985	25341	43204	PILOT,PULLER PART OF KIT P/N J-29642-C.....	

END OF FIGURE

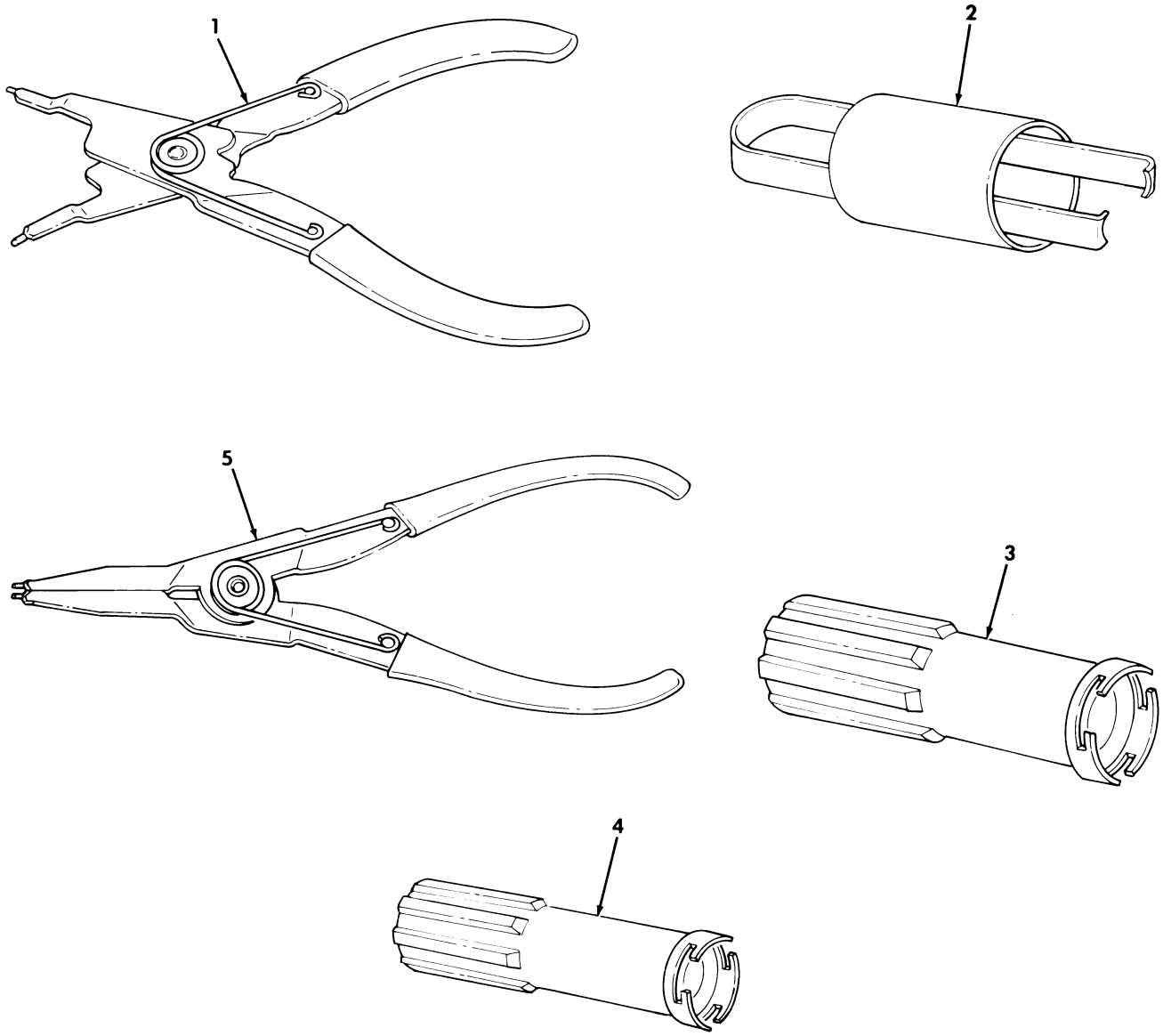

Figure 507. Special Tools, Air Conditioner Compressor.

(1) ITEM NO	(2) SMR CODE	(3) NSN	(4) CAGEC	(5) PART NUMBER	(6) DESCRIPTION AND USABLE ON CODES(UOC)	(7) QTY
					GROUP 2604 SPECIAL TOOLS	
					FIG. 507 SPECIAL TOOLS,AIR CONDITIONER COMPRESSOR	
1	PEFZZ	5120013734979	25341	40210	PLIERS,RETAINING RI INTERNAL SNAP-RING,SMALL,PART OF KIT P/N J-29642-C	
1	PEFZZ	5120013734980	85688	3R	PLIERS,RETAINING RI INTERNAL SNAP-RING,LARGE,PART OF KIT P/N J-29642-C	
2	PEFZZ	5120013738836	25341	42106	REMOVER,SEAL SEAT,PART OF KIT P/N J-29642-C.....	
3	PEFZZ	5120013734987	25341	43205	INSERTER AND REMOVE SEAL,PART OF KIT P/N J-29642-C.....	
4	PEFZZ	5120013734988	25341	43501	INSERTER AND REMOVE SEAL,PART OF KIT P/N J-29642-C.....	
5	PEFZZ	5120013734981	53800	9-46948	PLIERS,RETAINING RI EXTERNAL SNAP-RING,PART OF KIT P/N J-29642-C.....	

END OF FIGURE

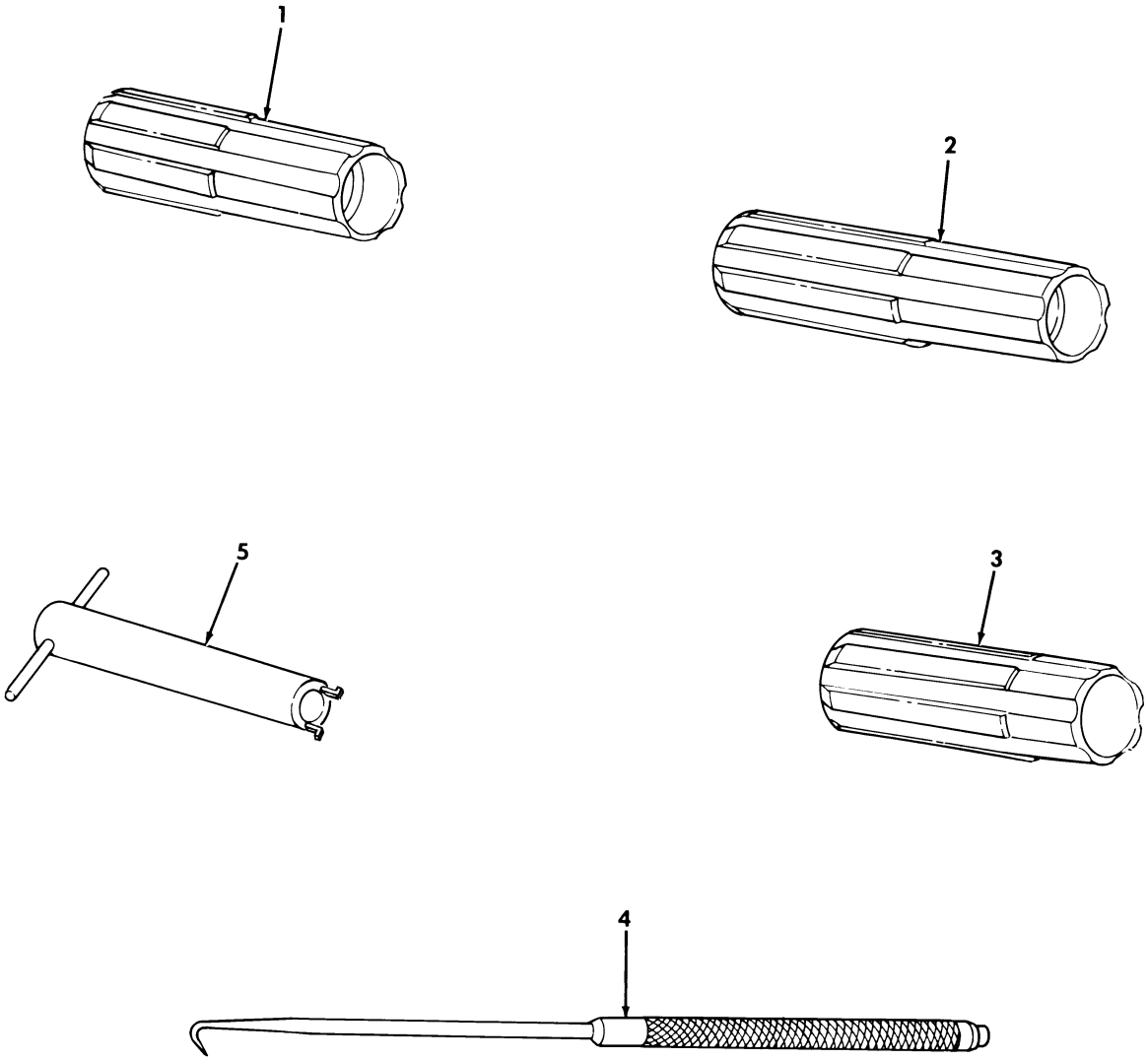

Figure 508. Special Tools, Air Conditioner Compressor.

(1) ITEM NO	(2) SMR CODE	(3) NSN	(4) CAGEC	(5) PART NUMBER	(6) DESCRIPTION AND USABLE ON CODES(UOC)	(7) QTY
					GROUP 2604 SPECIAL TOOLS	
					FIG. 508 SPECIAL TOOLS,AIR CONDITIONER COMPRESSOR	
1	PEFZZ	5120013738840	25341	43210	INSTALLATION TOOL,R SEAL/SEAT,PART OF KIT P/N J-29642-C.....	
2	PEFZZ	5120013734985	25341	42124	INSERTER,PREFORMED SNAP-RING,PART OF KIT P/N J-29642-C.....	
3	PEFZZ	5120013735983	25341	42107	INSTALLER,SEAL SEAT,PART OF KIT P/N J-29642-C.....	
4	PEFZZ	5120013735984	25341	42113	PICK,MINIATURE O-RING AND SEAL,PART OF KIT P/N J-29642-C.....	
5	PEFZZ	5120013734984	25341	43208	REMOVER,SEAL PART OF KIT P/N J-29642-C.....	

END OF FIGURE

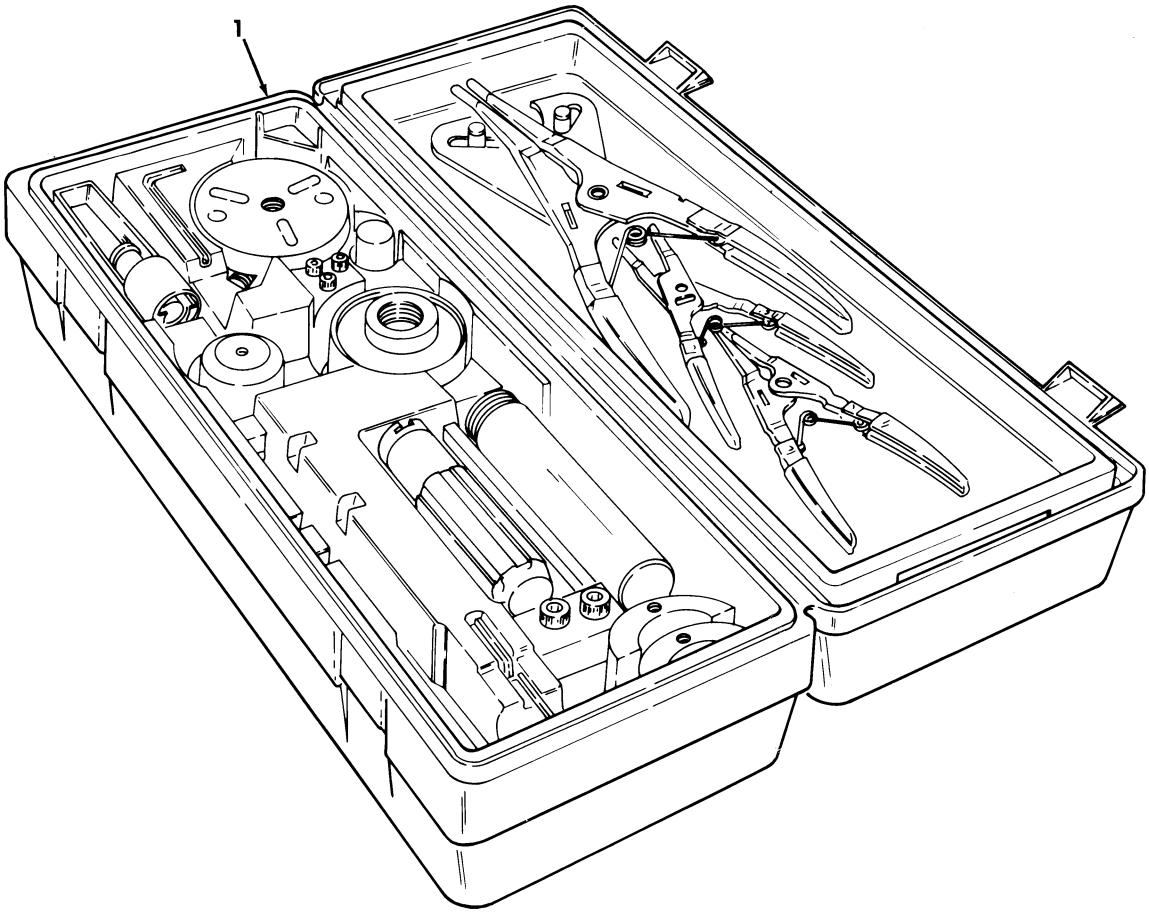

Figure 509. Special Tools, Air Compressor Tool Kit.

(1) ITEM NO	(2) SMR CODE	(3) NSN	(4) CAGEC	(5) PART NUMBER	(6) DESCRIPTION AND USABLE ON CODES(UOC)	(7) QTY
					GROUP 2604 SPECIAL TOOLS	
					FIG. 509 SPECIAL TOOLS,AIR CONDITIONER COMPRESSOR TOOL KIT	
1	PEFFF	5180012672907	25341	J-29642-C	TOOL KIT,COMPRESSOR AIR CONDITIONER COMPRESSOR,BOI:SEE PARA.5.I.....	

END OF FIGURE

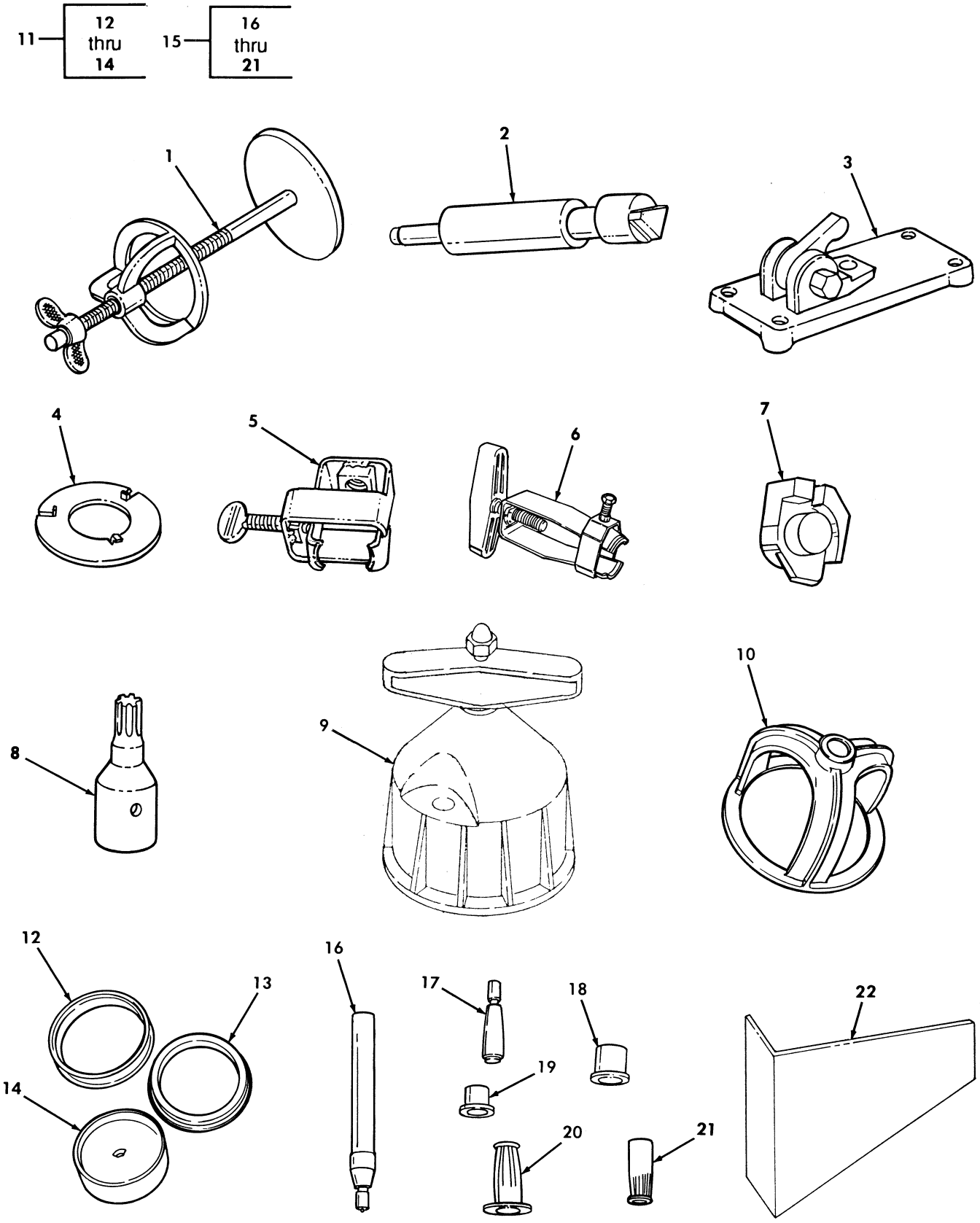

Figure 510. Special Tools, Transmission, Transfer Case, and Engine A2.

(1) ITEM NO	(2) SMR CODE	(3) NSN	(4) CAGEC	(5) PART NUMBER	(6) DESCRIPTION AND USABLE ON CODES(UOC)	(7) QTY
					GROUP 2604 SPECIAL TOOLS	
					FIG. 510 SPECIAL TOOLS,TRANSMISSION, TRANSFER CASE,AND ENGINE A2	
* 1	PEHZZ	4910011780724	25341	J-23327	COMPRESSOR,CLUTCH S BOI: SEE PARA. 5.I,PART OF KIT P/N 57K3218.....	
2	PEHZZ	5120014230032	33287	J-21370-10	GAUGE BAND TO APPLY PIN(USED WITH J-38737) BOI: SEE PARA.5.I,PART OF KIT P/N 57K3218.....	
3	PEHZZ	5120014221313	33287	J-38737	TOOL,TRANS BAND PIN BOI:SEE PARA.5.I PART OF KIT P/N 57K3218....	
4	PEHZZ	5120014108216	33287	J-25018-A	COMPRESSOR,CLUTCH S BOI:SEE PARA.5.I PART OF KIT P/N 57K3218....	
5	PEHZZ	5120014221300	33287	J-38868-A	TOOL,TRANS SHAFT GEAR UNIT ASSEMBLY BOI:SEE PARA.5.I PART OF KIT P/N 57K3218.....	
6	PEHZZ	5120014221308	33287	J-37789-A	TOOL,TRANS PUMP ASS BOI:SEE PARA.5.I PART OF KIT P/N 57K3218....	
7	PEHZZ	5120014221326	33287	J-38655	ADAPTER,TRANS FIXTU TRANSMISSION HOLDING FIXTURE BOI: SEE PARA.5.I PART OF KIT P/N 57K3218.....	
8	PEHZZ	5120013673536	55719	FTX40E	SCREWDRIVER ATTACHM BOI:SEE PARA.5.I PART OF KIT P/N 57K3218....	
9	PEHZZ	5120014220334	33287	J-39084	INSERTER,SEAL REAR CRANKSHAFT SEAL PART OF KIT P/N 57K3218.....	
10	PEHZZ	5120014221329	33287	J-38734	ADAPTER,TRANS CLUTC PISTON COMPRESSOR PART OF KIT P/N 57K3218..	
11	ADHHH	5180014220138	33287	J-38731	TOOL SET,TRANSMISSI BOI:SEE PARA.5.I PART OF KIT P/N 57K3218....	
12	PEHZZ	5120014220173	33287	J-38731-1	.PROTECTOR,SEAL,INNE.....	
13	PEHZZ	5120014220219	33287	J-38731-2	.PROTECTOR,SEAL,OUTE.....	
14	PEHZZ	5120014220139	33287	J-38731-3	.BASE,TRANS TOOL SET.....	
* 15	PEHHH	5120014087051	33287	J-38736	INSTALLATION TOOL,S BOI:SEE PARA.5.I PART OF KIT P/N 57K3218....	
16	PEHZZ	5120014221310	33287	J-38736-1	.LG SEAL RING PROTEC.....	
17	PEHZZ	5120014225406	33287	J-38736-2	.PROTECTOR,S RING,SM.....	
18	PEHZZ	5120014225411	33287	J-38736-3	.SIZER.....	
19	PEHZZ	5120014221318	33287	J-38736-4	.SM SIZER,TRANS SEAL.....	
20	PEHZZ	5120014221324	33287	J-38736-5	.LRG PUSHER,TRANSMIS.....	
* 21	PEHZZ	5120014087051	33287	J-38736-6	.INSTALLER,SEAL.....	
* 22	PEHZZ	5210012490369	78514	23716	GAGE,THROTTLE BOI:SEE PARA. 5.I.....	

END OF FIGURE

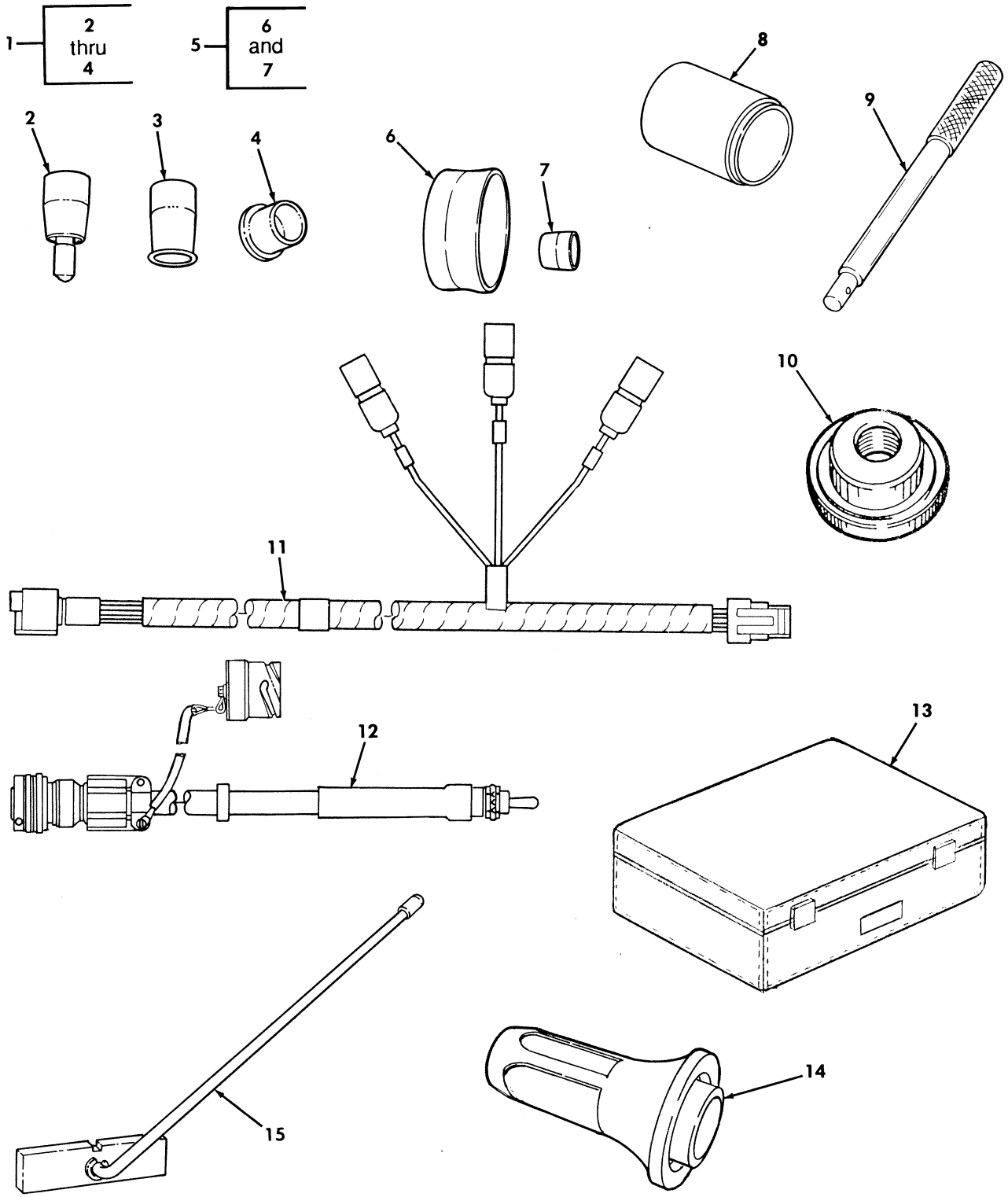

Figure 511. Special Tools, Transmission, Transfer Case, and Engine A2.

(1) ITEM NO	(2) SMR CODE	(3) NSN	(4) CAGEC	(5) PART NUMBER	(6) DESCRIPTION AND USABLE ON CODES(UOC)	(7) QTY
					GROUP 2604 SPECIAL TOOLS	
					FIG. 511 SPECIAL TOOLS,TRANSMISSION, TRANSFER CASE,AND ENGINE A2	
1	ADHHH	5180014221294	33287	J-38739	TOOL SET,TRANS PUMP BOI:SEE PARA.5.I PART OF KIT P/N 57K3218....	
2	PEHZZ	5120014221297	33287	J-38739-1	.PROTECTOR,TRANS PUM.....	
3	PEHZZ	5120014221302	33287	J-38739-2	.SIZER,TRANS PUMP AS.....	
4	PEHZZ	5120014221306	33287	J-38739-3	.PUSHER,TRANS PUMP A.....	
5	PEHZZ	5120014221301	33287	J-38732	TRANS SEAL PROTECTO BOI: SEE PARA.5.I PART OF KIT P/N 57K3218....	
6	PEHZZ	5120014221293	33287	J-38732-1	.PROTECTOR,TRANS SEA.....	
7	PEHZZ	4910011786551	25341	J-21362	.PROTECTOR,INNER SEA PART OF KIT P/N J-38732.....	
8	PEOZZ	5120014370480	80604	6888	INSERTER,SEAL BOI:SEE PARA.5.I PART OF KIT P/N 57K3219.....	
9	PEOZZ	5120010261666	80604	C-4171	HANDLE DRIVER BOI:SEE PARA.5.I PART OF KIT P/N 57K3219.....	
10	PEOZZ		33287	J-33832	REMOVER AND INSTALLER PART OF KIT P/N 57K3219.....	
11	PFOZZ	6150014127774	19207	12460120	CABLE ASSEMBLY,SPEC.....	
12	PEOZZ	6150014108215	19207	12460137	CABLE ASSEMBLY-SWIT DIAGNOSTIC SWITCH,BOI: SEE PARA. 5.1.....	
13	PEOZZ	5120014088173	19207	12460136	CASE,DIAGNOSTIC CAB DIAGOSTIC CABLE ASSEMBLY,BOI: SEE PARA. 5.1...	
14	PEOZZ	5120014141849	33287	J-38869	INSTALLER REAR EXTENSION SEAL,BOI: SEE PARA. 5.I,PART OF KIT P/N 57K3219.....	
15	PEOZZ	4820011794869	33287	J-33043	BLOCK,VALVE GAUGE BOI: SEE PARA. 5.I	
	ADHHH	5180014087050	19207	57K3218	TOOL KIT,VEHICULAR, REAR EXETNSION SEAL,BOI: SEE PARA. 5.I,PART OF KIT P/N 57K3219.....	
	ADOOO	5180014108467	19207	57K3219	TOOL KIT,VEHICULAR, REAR EXETNSION SEAL,BOI: SEE PARA. 5.I,PART OF KIT P/N 57K3218.....	

END OF FIGURE

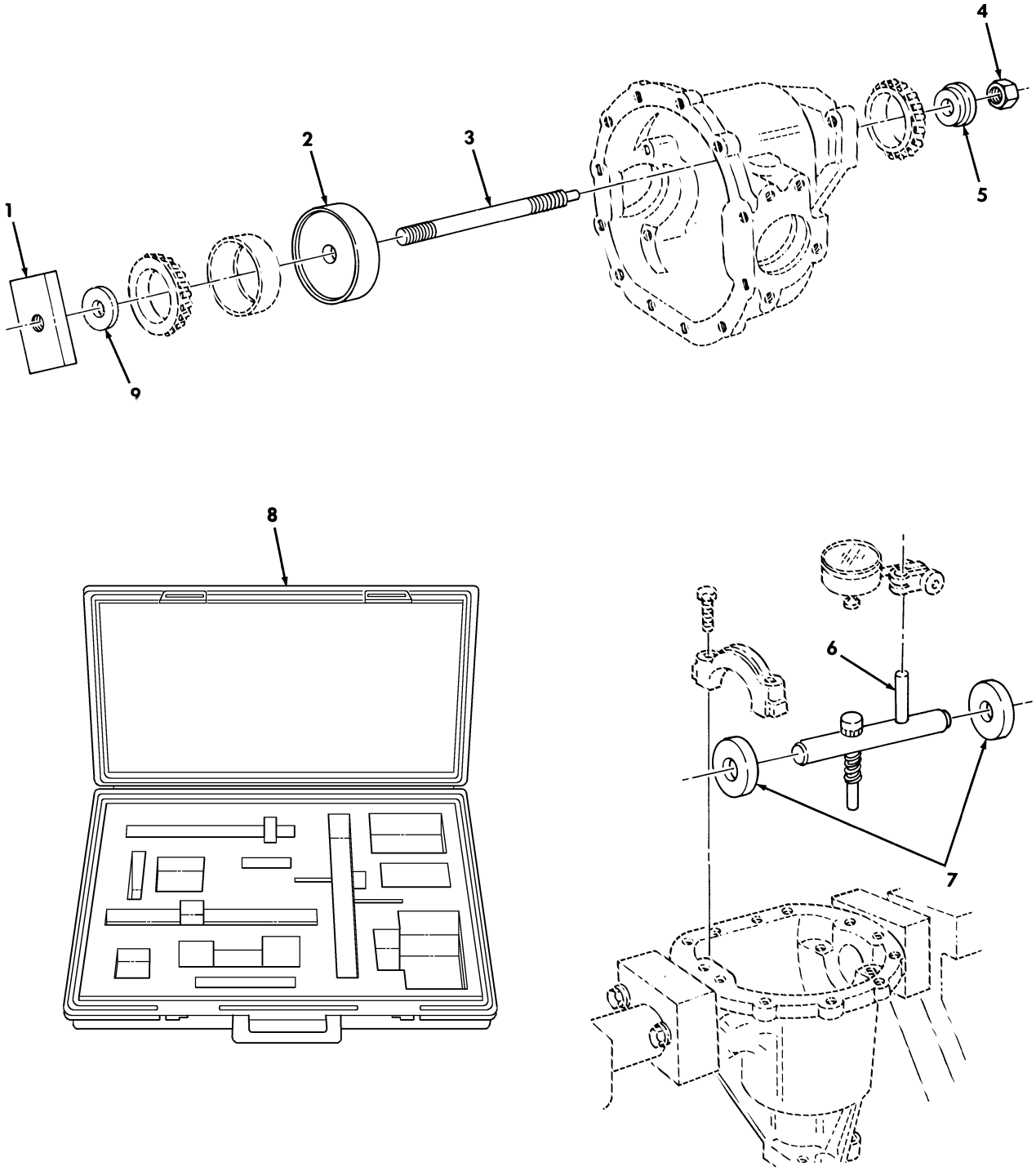

Figure 512. Pinion Setting Kit.

(1) ITEM NO	(2) SMR CODE	(3) NSN	(4) CAGEC	(5) PART NUMBER	(6) DESCRIPTION AND USABLE ON CODES(UOC)	(7) QTY
					GROUP 2604 SPECIAL TOOLS	
					FIG. 512 PINION SETTING KIT	
1	PEHZZ	5120013660893	33287	J-39524-2	BLOCK,RECTANGULAR GAUGE,BOI: SEE PARA. 5.I,PART OF KIT P/N 57K3229...	
2	PEHZZ	5120013662520	33287	J-39524-1	BLOCK,AXLE PINION BOI: SEE PARA. 5.I. PART OF KIT P/N J-39524.....	
3	PEHZZ	5120013669468	33287	J-21777-43	STUD ASSEMBLY BOI: SEE PARA.5.I. PART OF KIT P/N J-39524.....	
4	PEHZZ	5310014654525	24617	9418753	NUT,PLAIN,HEXAGON 1/2-13,BOI: SEE PARA. 5.I,PART OF KIT P/N 57K3229...	
5	PEHZZ	5120013660895	33287	J-35506-3	PILOT WASHER BOI: SEE PARA.5.I. PART OF KIT P/N J-39524.....	
6	PEHZZ	5120013664713	33287	J-39524-5	AXLE PINION ARBOR BOI:SEE PARA.5.I. PART OF KIT P/N J-39524.....	
7	PEHZZ	5120013666260	33287	J-35506-2	SIDE BEARING DISC,A BOI SEE PARA.5.I. PART OF KIT P/N J-39524...	
8	PEHZZ	5140013660642	33287	J-39524-4	CASE,TOOL AND ACCES BOI: SEE PARA 5.I, PART OF KIT P/N J-39524.....	
9	PEHZZ	5120013660894	33287	J-34175-4	PILOT WASHER BOI: SEE PARA. 5.I PART OF KIT P/N J-39524.....	
	ADHHH	5180013638079	33287	J-39524	TOOL KIT,VEHICULAR, PART OF KIT P/N 57K0236 PART OF KIT P/N 57K0266.....	
	ADOOO	5180013875455	19207	57K0267	TOOL KIT,VEHICULAR..BOI: SEE PARA 5.I.....	
	ADFFF	5180013897560	19207	57K0268	TOOL KIT,VEHICULAR BOI: SEE PARA 5.I.....	
	PEHZZ	5180013579692	19207	57K0236	TOOL KIT,TRANSMISSS SUPPLEMENTAL KIT,GENERAL SUPPORT.....	
	ADHHH	5180013897561	19207	57K0266	TOOL KIT,VEHICULAR BOI: SEE PARA 5.I.....	

END OF FIGURE

CROSS REFERENCE INDEXES

NATIONAL STOCK NUMBER INDEX

STOCK NUMBER	FIGURE NO	ITEM NO
6220-00-001-1514	64	8
5330-00-001-1984	116	16
2840-00-001-4903	111	5
5330-00-001-4904	111	4
5310-00-003-6779	260	13
3110-00-005-0873	109	6
3110-00-005-0873	111	8
4720-00-005-5008	385	3
4720-00-006-0048	BULK	63
5310-00-006-8291	225	44
4720-00-006-9541	BULK	10
5310-00-007-1607	283	12
5325-00-007-3052	109	1
5325-00-007-3052	110	1
5325-00-007-3052	111	11
5325-00-007-3052	112	10
4240-00-007-9453	311	10
4240-00-007-9453	312	6
5977-00-008-3338	KITS	12
2520-00-008-9987	109	2
2920-00-009-5213	KITS	2
5310-00-010-3028	437	6
9330-00-011-2000	BULK	65
4730-00-011-4627	348	16
5310-00-011-5093	138	17
5310-00-011-5093	139	14
5310-00-011-5093	145	17
5310-00-011-5093	146	14
5310-00-011-5093	164	3
5310-00-011-6121	70	7
5310-00-011-6121	127	5
5310-00-011-6121	472	12
5310-00-011-6121	475	20
5310-00-011-6121	476	18
5310-00-011-6121	481	3
5315-00-012-0123	144	13
5315-00-012-0123	152	13
5315-00-012-0123	170	1
5315-00-012-0123	183	4
5315-00-012-0123	185	15
5315-00-012-0123	187	19
5315-00-012-0123	188	13
5315-00-012-0123	195	12
5306-00-012-0231	403	10
5310-00-012-0367	370	24
5310-00-012-0388	33A	14
5310-00-012-0388	33B	4
5310-00-012-1743	269	29
5315-00-012-4553	36	5
5315-00-012-4553	38	5
5315-00-012-4553	39	8
5315-00-012-4553	43B	26
4730-00-012-7951	143	18
4730-00-012-7951	151	18
5310-00-013-1482	215	10
5315-00-013-7228	156	14
4730-00-014-2432	10	12
5310-00-014-5850	63	6
5310-00-014-5850	93	25
5310-00-014-5850	95	39
5310-00-014-5850	96	29
5310-00-014-5850	169	20
5310-00-014-5850	199	33
5310-00-014-5850	199	57
5310-00-014-5850	202	42
5310-00-014-5850	203	31
5310-00-014-5850	205	39
5310-00-014-5850	206	15
5310-00-014-5850	213	15
5310-00-014-5850	214	11
5310-00-014-5850	222	11
5310-00-014-5850	227	49
5310-00-014-5850	232	2
5310-00-014-5850	241	8
5310-00-014-5850	243	2
5310-00-014-5850	244	18
5310-00-014-5850	246	8
5310-00-014-5850	246	13
5310-00-014-5850	247	12
5310-00-014-5850	248	4
5310-00-014-5850	249	41
5310-00-014-5850	268	25
5310-00-014-5850	272	15

CROSS REFERENCE INDEXES

NATIONAL STOCK NUMBER INDEX

STOCK NUMBER	FIGURE NO	ITEM NO	STOCK NUMBER	FIGURE NO	ITEM NO
5310-00-014-5850	293	12	5925-00-026-4767	385	12
5310-00-014-5850	299	2	5315-00-038-3059	121	6
5310-00-014-5850	303	10	2540-00-039-8258	56	13
5310-00-014-5850	331	22	2540-00-040-2129	271	14
5310-00-014-5850	333	15	4730-00-041-2526	30	19
5310-00-014-5850	337	17	5306-00-042-5570	84	5
5310-00-014-5850	339	27	5306-00-042-5570	88	46
5310-00-014-5850	347	4	5305-00-043-2682	279	23
5310-00-014-5850	368	26	4730-00-043-3750	345	34
5310-00-014-5850	374	14	4730-00-043-3750	348	34
5310-00-014-5850	411	7	5310-00-044-3340	40	7
5310-00-014-5850	429	4	5310-00-044-3342	127	13
5310-00-014-5850	430	8	5310-00-044-3342	166	5
5310-00-014-5850	430	40	5310-00-044-3342	180	17
5310-00-014-5850	446	10	4730-00-044-4577	15	7
5310-00-014-5850	447	8	5310-00-044-6188	370	25
5310-00-014-5850	448	7	5310-00-044-6212	370	27
5310-00-014-5850	449	8	6240-00-044-6914	60	7
5310-00-014-5850	450	2	6240-00-044-6914	61	7
5310-00-014-5850	480	9	6240-00-044-6914	62	3
5305-00-014-9926	387	12	6240-00-044-6914	64	11
5305-00-014-9926	392	1	5310-00-045-3296	39	33
5305-00-018-7838	88	44	5310-00-045-3296	54	12
5305-00-018-7838	254	7	5310-00-045-3296	55	21
5305-00-018-7838	254	10	5310-00-045-3296	59	17
5305-00-018-7838	445	10	5310-00-045-3296	240	19
5305-00-018-7838	487	8	5310-00-045-3296	260	10
5305-00-018-8370	345	37	5310-00-045-3296	283	29
5305-00-018-8370	348	27	5310-00-045-3296	327	35
6240-00-019-0877	63	4	5310-00-045-3296	335	13
6240-00-019-3093	60	6	5310-00-045-3296	336	10
6240-00-019-3093	61	6	5310-00-045-3296	337	18
5940-00-020-0072	79	12	5310-00-045-3296	338	11
5310-00-020-0358	438	11	5310-00-045-3296	410	13
4730-00-024-3971	13	10	5310-00-045-3296	410	17
4730-00-024-3971	14	16	5310-00-045-3296	412	10
4730-00-024-3971	19	21	5310-00-045-3296	416	15
4730-00-024-3971	27	6	5310-00-045-3296	426	22
4730-00-024-3971	125	9	5310-00-045-3296	427	17
4730-00-024-3971	366	21	5310-00-045-3296	428	15
4730-00-024-3971	368	38	5310-00-045-3296	43B	23
4730-00-024-3971	176A	15	5310-00-045-3296	442	7
5306-00-024-6580	104	8	5310-00-045-3296	460	3
2910-00-025-3493	335	9	5310-00-045-3296	482	21
2910-00-025-3493	336	6	5310-00-045-3296	485	16
2910-00-025-3493	388	7	5310-00-045-3299	39	77
5925-00-026-4767	380	4	5310-00-045-3299	46	13

CROSS REFERENCE INDEXES

NATIONAL STOCK NUMBER INDEX

STOCK NUMBER	FIGURE NO	ITEM NO	STOCK NUMBER	FIGURE NO	ITEM NO
5310-00-045-3299	48	2	4730-00-050-4203	152	9
5310-00-045-3299	52	22	4730-00-050-4203	152	19
5310-00-045-3299	64	18	4730-00-050-4203	170	5
5310-00-045-3299	380	2	4730-00-050-4203	170	8
5310-00-045-4007	39	30	4730-00-050-4205	170	4
5310-00-045-4007	56	22	4730-00-050-4205	170	12
5310-00-045-4007	84	25	4730-00-050-4205	170	18
5310-00-045-4007	213	18	4730-00-050-4205	195	7
5310-00-045-4007	214	14	4730-00-050-4207	191	25
5310-00-045-4007	333	29	5940-00-050-7106	79	11
5310-00-045-5207	69	32	5340-00-050-9077	123	3
5310-00-045-5218	70	6	5340-00-050-9077	135	6
5310-00-045-5218	481	4	5340-00-050-9077	141	24
5305-00-045-7603	224	8	5340-00-050-9077	149	8
5305-00-045-7603	268	26	5340-00-050-9077	414	12
4730-00-045-9769	142	30	5305-00-050-9229	347	2
4730-00-045-9769	143	39	5305-00-050-9233	280	16
4730-00-045-9769	150	30	5305-00-051-4076	324	7
4730-00-045-9769	151	39	5305-00-051-4076	378	30
1005-00-049-9324	KITS	24	5306-00-051-4077	266	4
2640-00-050-1229	167	22	5306-00-051-4077	321	29
5306-00-050-1238	433	9	5306-00-051-4077	321	34
5340-00-050-2740	59	9	5306-00-051-4077	325	29
5340-00-050-2740	83	21	5306-00-051-4077	413	11
5340-00-050-2740	84	12	5306-00-051-4077	415	5
5340-00-050-2740	88	18	5305-00-051-8605	141	11
5340-00-050-2740	91	11	5305-00-051-8605	149	9
5340-00-050-2740	94	9	5305-00-051-8605	159	11
5340-00-050-2740	96	27	5305-00-051-8605	161	4
5340-00-050-2740	282	5	5305-00-051-8605	162	4
5340-00-050-2740	338	16	5305-00-052-2232	199	18
5340-00-050-2740	339	12	5305-00-052-2232	251	19
5340-00-050-2740	410	22	5305-00-052-2232	270	11
5340-00-050-2740	412	16	5305-00-052-2232	296	1
5340-00-050-2740	414	20	5305-00-052-6456	34	17
5340-00-050-2740	416	23	5305-00-052-6921	28	2
5340-00-050-2740	416	29	5305-00-052-8881	469	4
5340-00-050-2740	424	3	5340-00-053-8994	75	39
5340-00-050-2740	428	22	5340-00-053-8994	472	4
4730-00-050-4203	136	9	5340-00-053-8994	474	2
4730-00-050-4203	136	18	5340-00-053-8994	480	24
4730-00-050-4203	136	22	5305-00-054-5642	238	21
4730-00-050-4203	137	8	5305-00-054-5650	282	14
4730-00-050-4203	137	11	5305-00-054-6652	214	15
4730-00-050-4203	137	23	5305-00-054-6670	482	19
4730-00-050-4203	144	9	5305-00-054-6672	64	17
4730-00-050-4203	144	19	5305-00-054-6672	252	7

CROSS REFERENCE INDEXES

NATIONAL STOCK NUMBER INDEX

STOCK NUMBER	FIGURE NO	ITEM NO	STOCK NUMBER	FIGURE NO	ITEM NO
3110-00-055-2100	128	45	5305-00-059-3659	426	21
5305-00-056-7879	385	1	5305-00-059-3659	427	18
5305-00-056-7879	395	11	5305-00-059-3659	428	12
5305-00-056-7879	396	4	5305-00-059-3659	43B	22
3110-00-056-9376	128	7	5305-00-059-3660	59	23
5340-00-057-2904	75	25	5305-00-059-3660	65	19
5340-00-057-2904	77	6	5305-00-059-3660	92	14
5340-00-057-2904	79	22	5305-00-059-3660	95	43
5340-00-057-2904	83	22	5305-00-059-3660	218	5
5340-00-057-2904	85	29	5305-00-059-3660	236	1
5340-00-057-2904	88	23	5305-00-059-3660	253	7
5340-00-057-2904	92	15	5305-00-059-3660	253	10
5340-00-057-2904	93	19	5305-00-059-3660	253	18
5340-00-057-2904	95	26	5305-00-059-3660	253	30
5340-00-057-2904	96	24	5305-00-059-3660	255	9
5340-00-057-2904	282	3	5305-00-059-3660	255	17
5340-00-057-2904	338	8	5305-00-059-3660	255	23
5340-00-057-2904	339	2	5305-00-059-3660	259	5
5340-00-057-2904	366	7	5305-00-059-3660	260	2
5340-00-057-2904	410	24	5305-00-059-3660	262	13
5340-00-057-2904	412	18	5305-00-059-3660	325	22
5340-00-057-2904	414	14	5305-00-059-3660	426	17
5340-00-057-2906	88	32	5305-00-059-3660	427	22
5340-00-057-2906	92	12	5305-00-059-3661	255	9
5340-00-057-2906	95	35	5305-00-059-3661	255	17
5340-00-057-2906	410	19	5305-00-059-3661	255	23
5340-00-057-2906	414	17	5305-00-059-3661	255	28
5340-00-057-2906	416	18	5305-00-059-3661	410	25
5340-00-057-2906	428	17	5305-00-059-3661	412	19
5340-00-057-2906	453	4	6240-00-060-4707	65	10
5340-00-057-3043	160	15	6240-00-060-4707	65	25
5340-00-057-3043	162	11	5310-00-061-0004	345	25
5340-00-057-3043	424	2	5310-00-061-0004	348	36
5340-00-057-3043	426	26	5310-00-061-4650	5	7
5340-00-057-3052	69	41	5310-00-061-4650	13	18
5340-00-057-3052	282	6	5310-00-061-4650	14	24
5970-00-057-9987	44	25	5310-00-061-4650	15	3
5305-00-058-1082	12	34	5310-00-061-4650	16	3
5305-00-058-1082	274	28	5310-00-061-4650	17	9
5305-00-059-3659	227	14	5310-00-061-4650	18	4
5305-00-059-3659	321	6	5310-00-061-4650	18	10
5305-00-059-3659	339	4	5310-00-061-4650	21	1
5305-00-059-3659	373	3	5310-00-061-4650	25	7
5305-00-059-3659	376	5	5310-00-061-4650	27	14
5305-00-059-3659	410	14	5310-00-061-4650	29	3
5305-00-059-3659	412	9	5310-00-061-4650	42	8
5305-00-059-3659	416	12	5310-00-061-4650	46	21

CROSS REFERENCE INDEXES

NATIONAL STOCK NUMBER INDEX

STOCK NUMBER	FIGURE NO	ITEM NO	STOCK NUMBER	FIGURE NO	ITEM NO
5310-00-061-4650	50	8	5310-00-061-4650	275	20
5310-00-061-4650	71	10	5310-00-061-4650	276	20
5310-00-061-4650	84	22	5310-00-061-4650	285	13
5310-00-061-4650	97	4	5310-00-061-4650	286	16
5310-00-061-4650	98	13	5310-00-061-4650	288	22
5310-00-061-4650	99	11	5310-00-061-4650	288	30
5310-00-061-4650	103	6	5310-00-061-4650	289	5
5310-00-061-4650	124	13	5310-00-061-4650	293	31
5310-00-061-4650	125	13	5310-00-061-4650	316	21
5310-00-061-4650	141	17	5310-00-061-4650	323	13
5310-00-061-4650	153	17	5310-00-061-4650	331	9
5310-00-061-4650	169	27	5310-00-061-4650	332	42
5310-00-061-4650	169	33	5310-00-061-4650	333	39
5310-00-061-4650	177	13	5310-00-061-4650	334	5
5310-00-061-4650	178	24	5310-00-061-4650	338	22
5310-00-061-4650	202	26	5310-00-061-4650	339	17
5310-00-061-4650	203	9	5310-00-061-4650	343	17
5310-00-061-4650	203	23	5310-00-061-4650	366	30
5310-00-061-4650	204	14	5310-00-061-4650	368	32
5310-00-061-4650	206	24	5310-00-061-4650	375	28
5310-00-061-4650	210	4	5310-00-061-4650	376	13
5310-00-061-4650	211	26	5310-00-061-4650	384	9
5310-00-061-4650	212	27	5310-00-061-4650	398	27
5310-00-061-4650	241	5	5310-00-061-4650	399	15
5310-00-061-4650	243	8	5310-00-061-4650	400	13
5310-00-061-4650	244	7	5310-00-061-4650	402	12
5310-00-061-4650	245	16	5310-00-061-4650	409	9
5310-00-061-4650	245	32	5310-00-061-4650	411	10
5310-00-061-4650	246	18	5310-00-061-4650	413	5
5310-00-061-4650	247	5	5310-00-061-4650	415	15
5310-00-061-4650	247	18	5310-00-061-4650	417	18
5310-00-061-4650	248	7	5310-00-061-4650	418	9
5310-00-061-4650	249	27	5310-00-061-4650	419	4
5310-00-061-4650	250	19	5310-00-061-4650	420	6
5310-00-061-4650	251	1	5310-00-061-4650	421	6
5310-00-061-4650	252	22	5310-00-061-4650	422	8
5310-00-061-4650	253	21	5310-00-061-4650	423	9
5310-00-061-4650	254	22	5310-00-061-4650	429	22
5310-00-061-4650	255	20	5310-00-061-4650	430	17
5310-00-061-4650	267	3	5310-00-061-4650	430	38
5310-00-061-4650	267	13	5310-00-061-4650	440	21
5310-00-061-4650	269	13	5310-00-061-4650	446	16
5310-00-061-4650	270	1	5310-00-061-4650	468	4
5310-00-061-4650	270	26	5310-00-061-4650	475	9
5310-00-061-4650	271	9	5310-00-061-4650	477	5
5310-00-061-4650	272	2	5310-00-061-4650	478	3
5310-00-061-4650	274	18	5310-00-061-4650	484	15

CROSS REFERENCE INDEXES

NATIONAL STOCK NUMBER INDEX

STOCK NUMBER	FIGURE NO	ITEM NO	STOCK NUMBER	FIGURE NO	ITEM NO
5310-00-061-4650	485	14	5305-00-068-0502	254	1
5310-00-061-4650	486	9	5305-00-068-0502	255	1
5310-00-061-4650	492	7	5305-00-068-0502	267	9
5310-00-061-4650	176A	21	5305-00-068-0502	269	11
5310-00-061-4651	185	8	5305-00-068-0502	270	5
5310-00-061-4651	186	11	5305-00-068-0502	294	4
5310-00-061-4651	187	6	5305-00-068-0502	311	2
5310-00-061-4651	194	12	5305-00-068-0502	313	9
5310-00-061-4651	441	9	5305-00-068-0502	331	25
5310-00-061-4651	442	20	5305-00-068-0502	333	9
5310-00-061-4651	457	20	5305-00-068-0502	338	30
5310-00-061-4651	470	12	5305-00-068-0502	339	28
5310-00-061-7326	365	22	5305-00-068-0502	342	4
5310-00-063-7360	345	42	5305-00-068-0502	343	14
5310-00-063-7360	348	39	5305-00-068-0502	377	1
4720-00-065-8682	BULK	17	5305-00-068-0502	384	13
9330-00-065-8682	BULK	1	5305-00-068-0502	393	7
5340-00-067-3868	135	2	5305-00-068-0502	395	19
5340-00-067-3868	141	22	5305-00-068-0502	399	13
5305-00-068-0501	18	13	5305-00-068-0502	410	30
5305-00-068-0501	118	12	5305-00-068-0502	412	11
5305-00-068-0501	286	19	5305-00-068-0502	416	3
5305-00-068-0501	307	9	5305-00-068-0502	421	11
5305-00-068-0502	19	16	5305-00-068-0502	422	11
5305-00-068-0502	21	4	5305-00-068-0502	440	10
5305-00-068-0502	50	11	5305-00-068-0502	484	5
5305-00-068-0502	53	3	5305-00-068-0502	492	9
5305-00-068-0502	58	9	5305-00-068-0502	494	5
5305-00-068-0502	68	1	5305-00-068-0502	495	11
5305-00-068-0502	70	9	5305-00-068-0502	496	9
5305-00-068-0502	84	24	5305-00-068-0502	497	5
5305-00-068-0502	93	16	5305-00-068-0502	498	17
5305-00-068-0502	124	10	5305-00-068-0508	15	20
5305-00-068-0502	125	10	5305-00-068-0508	17	12
5305-00-068-0502	141	14	5305-00-068-0508	29	6
5305-00-068-0502	155	2	5305-00-068-0508	88	50
5305-00-068-0502	180	19	5305-00-068-0508	208	2
5305-00-068-0502	203	11	5305-00-068-0508	233	6
5305-00-068-0502	206	4	5305-00-068-0508	241	12
5305-00-068-0502	208	14	5305-00-068-0508	243	13
5305-00-068-0502	241	3	5305-00-068-0508	252	3
5305-00-068-0502	244	16	5305-00-068-0508	269	33
5305-00-068-0502	245	20	5305-00-068-0508	270	28
5305-00-068-0502	250	16	5305-00-068-0508	275	5
5305-00-068-0502	251	21	5305-00-068-0508	283	14
5305-00-068-0502	252	1	5305-00-068-0508	287	12
5305-00-068-0502	253	1	5305-00-068-0508	327	45

CROSS REFERENCE INDEXES

NATIONAL STOCK NUMBER INDEX

STOCK NUMBER	FIGURE NO	ITEM NO	STOCK NUMBER	FIGURE NO	ITEM NO
5305-00-068-0508	331	35	5305-00-068-0510	275	1
5305-00-068-0508	332	5	5305-00-068-0510	276	24
5305-00-068-0508	365	4	5305-00-068-0510	277	47
5305-00-068-0508	368	40	5305-00-068-0510	286	29
5305-00-068-0508	398	16	5305-00-068-0510	38A	5
5305-00-068-0508	399	21	5305-00-068-0510	445	13
5305-00-068-0508	400	14	5305-00-068-0510	463	6
5305-00-068-0508	43B	41	5305-00-068-0510	464	3
5305-00-068-0508	446	36	5305-00-068-0510	471	11
5305-00-068-0508	457	14	5305-00-068-0510	476	1
5305-00-068-0508	468	5	5305-00-068-0511	24	8
5305-00-068-0508	478	4	5305-00-068-0511	138	16
5305-00-068-0508	481	6	5305-00-068-0511	139	15
5305-00-068-0508	485	10	5305-00-068-0511	145	16
5305-00-068-0508	492	9	5305-00-068-0511	146	15
5305-00-068-0508	498	8	5305-00-068-0511	189	9
5305-00-068-0509	49	6	5305-00-068-0511	190	7
5305-00-068-0509	198	7	5305-00-068-0511	266	18
5305-00-068-0509	251	28	5305-00-068-0511	272	33
5305-00-068-0509	252	11	5305-00-068-0511	283	6
5305-00-068-0509	270	8	5305-00-068-0511	431	2
5305-00-068-0509	285	3	5305-00-068-0511	462	2
5305-00-068-0509	288	24	5306-00-068-0513	68	6
5305-00-068-0509	288	32	5306-00-068-0513	379	24
5305-00-068-0509	321	11	5306-00-068-0513	379	29
5305-00-068-0509	398	10	5306-00-068-0513	388	15
5305-00-068-0509	402	3	5306-00-068-0513	66A	3
5305-00-068-0509	425	3	5306-00-068-0514	379	13
5305-00-068-0509	426	10	5305-00-068-0515	64	22
5305-00-068-0509	427	4	5305-00-068-0515	379	52
5305-00-068-0509	487	9	5305-00-068-0515	387	17
5305-00-068-0510	2	6	5305-00-068-0515	393	9
5305-00-068-0510	15	31	5310-00-068-5285	127	12
5305-00-068-0510	16	20	5310-00-068-5285	165	5
5305-00-068-0510	23	18	5310-00-068-5285	166	4
5305-00-068-0510	24	26	5310-00-068-5285	179	9
5305-00-068-0510	26	7	5310-00-068-5285	180	10
5305-00-068-0510	35	2	5305-00-068-7837	28	8
5305-00-068-0510	37	2	5305-00-068-7837	46	25
5305-00-068-0510	142	15	5305-00-068-7837	155	11
5305-00-068-0510	143	15	5305-00-068-7837	177	10
5305-00-068-0510	150	15	5305-00-068-7837	178	5
5305-00-068-0510	151	15	5305-00-068-7837	197	30
5305-00-068-0510	174	13	5305-00-068-7837	199	42
5305-00-068-0510	175	6	5305-00-068-7837	210	3
5305-00-068-0510	245	21	5305-00-068-7837	274	8
5305-00-068-0510	274	27	5305-00-068-7837	276	1

CROSS REFERENCE INDEXES

NATIONAL STOCK NUMBER INDEX

STOCK NUMBER	FIGURE NO	ITEM NO	STOCK NUMBER	FIGURE NO	ITEM NO
5305-00-068-7837	176A	17	5305-00-071-2067	147	5
5305-00-069-5578	398	3	5305-00-071-2067	150	16
5305-00-071-1313	373	4	5305-00-071-2067	151	16
5305-00-071-1313	376	4	5305-00-071-2067	179	17
5305-00-071-1315	316	16	5305-00-071-2067	180	27
5305-00-071-1315	320	15	5305-00-071-2067	182	20
5305-00-071-1315	320	27	5305-00-071-2067	183	19
5305-00-071-1315	375	23	5305-00-071-2067	184	7
5305-00-071-1315	378	23	5305-00-071-2067	237	9
5305-00-071-1318	214	4	5305-00-071-2067	429	34
5305-00-071-1318	246	24	5305-00-071-2067	456	6
5305-00-071-1318	251	7	5305-00-071-2067	487A	4
5305-00-071-1318	252	26	5305-00-071-2069	142	34
5305-00-071-1318	267	18	5305-00-071-2069	143	40
5305-00-071-1318	296	15	5305-00-071-2069	174	8
5305-00-071-1322	246	31	5305-00-071-2069	182	13
5305-00-071-1322	410	29	5305-00-071-2069	183	9
5305-00-071-1327	316	10	5305-00-071-2069	183	24
5305-00-071-1327	320	8	5305-00-071-2069	187	14
5305-00-071-1327	320	20	5305-00-071-2069	209	15
5305-00-071-1327	378	16	5305-00-071-2069	283	5
5305-00-071-1783	188	22	5305-00-071-2069	315	8
5305-00-071-1786	136	5	5305-00-071-2069	363	27
5305-00-071-1786	151	42	5305-00-071-2069	417	16
5305-00-071-1788	425	5	5305-00-071-2069	456	23
5305-00-071-1788	426	8	5305-00-071-2070	127	4
5305-00-071-1788	427	6	5305-00-071-2070	181	8
5305-00-071-2055	35	31	5305-00-071-2070	186	13
5305-00-071-2055	152	16	5305-00-071-2070	242	6
5305-00-071-2056	389	3	5305-00-071-2070	245	24
5305-00-071-2056	393	3	5305-00-071-2070	429	38
5305-00-071-2056	395	14	5305-00-071-2070	438	6
5305-00-071-2057	37	21	5305-00-071-2070	441	14
5305-00-071-2057	42	5	5305-00-071-2070	446	26
5305-00-071-2057	462	13	5305-00-071-2070	456	24
5305-00-071-2059	37	9	5305-00-071-2071	26	12
5305-00-071-2059	42	5	5305-00-071-2071	185	10
5305-00-071-2066	140	5	5305-00-071-2071	252	13
5305-00-071-2066	140	11	5305-00-071-2071	285	6
5305-00-071-2066	147	9	5305-00-071-2071	295	8
5305-00-071-2066	182	13	5305-00-071-2071	455	2
5305-00-071-2066	182	21	5305-00-071-2071	456	5
5305-00-071-2066	183	19	5305-00-071-2072	283	4
5305-00-071-2066	296	4	5305-00-071-2073	188	24
5305-00-071-2067	140	11	5305-00-071-2073	191	7
5305-00-071-2067	142	16	5305-00-071-2074	33	1
5305-00-071-2067	143	16	5305-00-071-2074	182	18

CROSS REFERENCE INDEXES

NATIONAL STOCK NUMBER INDEX

STOCK NUMBER	FIGURE NO	ITEM NO	STOCK NUMBER	FIGURE NO	ITEM NO
5305-00-071-2074	183	18	5305-00-071-2505	420	9
5305-00-071-2075	182	14	5305-00-071-2505	421	3
5305-00-071-2075	183	23	5305-00-071-2505	422	5
5305-00-071-2075	188	6	5305-00-071-2505	423	12
5305-00-071-2075	191	7	5305-00-071-2506	25	1
5305-00-071-2075	33A	1	5305-00-071-2506	28	8
5305-00-071-2076	147	9	5305-00-071-2506	55	12
5305-00-071-2076	182	8	5305-00-071-2506	103	4
5305-00-071-2076	182	16	5305-00-071-2506	156	16
5305-00-071-2076	188	9	5305-00-071-2506	365	13
5305-00-071-2077	191	5	5305-00-071-2506	365	26
5305-00-071-2078	181	7	5305-00-071-2506	368	24
5305-00-071-2078	184	4	5305-00-071-2506	375	30
5305-00-071-2078	188	1	5305-00-071-2506	496	13
5305-00-071-2079	181	3	5305-00-071-2509	83	29
5305-00-071-2079	182	8	5305-00-071-2509	88	46
5305-00-071-2079	188	24	5305-00-071-2509	225	41
5305-00-071-2079	191	7	5305-00-071-2509	246	35
5305-00-071-2081	2	11	5305-00-071-2509	248	27
5305-00-071-2081	179	13	5305-00-071-2509	249	20
5305-00-071-2081	180	18	5305-00-071-2509	252	10
5305-00-071-2081	184	17	5305-00-071-2509	253	13
5305-00-071-2082	179	6	5305-00-071-2509	253	20
5305-00-071-2082	180	7	5305-00-071-2509	255	19
5305-00-071-2083	363	16	5305-00-071-2509	289	9
5305-00-071-2236	266	23	5305-00-071-2509	389	11
5305-00-071-2236	401	14	5305-00-071-2510	153	11
5305-00-071-2237	338	21	5305-00-071-2510	211	11
5305-00-071-2237	339	16	5305-00-071-2510	212	7
5305-00-071-2237	393	1	5305-00-071-2510	246	29
5305-00-071-2237	395	12	5305-00-071-2510	246	38
5305-00-071-2237	413	8	5305-00-071-2510	249	9
5305-00-071-2237	486	5	5305-00-071-2510	484	10
5305-00-071-2505	80	13	5305-00-071-2511	248	20
5305-00-071-2505	98	15	5305-00-071-2512	293	26
5305-00-071-2505	99	6	5305-00-071-2513	248	25
5305-00-071-2505	202	16	5305-00-071-2513	249	36
5305-00-071-2505	209	6	5305-00-071-2514	251	10
5305-00-071-2505	245	37	2910-00-073-0165	334	1
5305-00-071-2505	247	15	5975-00-074-2072	12	9
5305-00-071-2505	280	54	5975-00-074-2072	98	8
5305-00-071-2505	281	54	5975-00-074-2072	345	7
5305-00-071-2505	311	4	5975-00-074-2072	485	8
5305-00-071-2505	325	13	5310-00-074-2351	292	1
5305-00-071-2505	326	13	5325-00-074-3301	BULK	6
5305-00-071-2505	418	1	5331-00-078-0265	43	22
5305-00-071-2505	419	1	2540-00-078-6633	191	9

CROSS REFERENCE INDEXES

NATIONAL STOCK NUMBER INDEX

STOCK NUMBER	FIGURE NO	ITEM NO	STOCK NUMBER	FIGURE NO	ITEM NO
2540-00-078-6633	191	17	5310-00-080-6004	329	13
5340-00-079-7837	21	16	5310-00-080-6004	332	34
5340-00-079-7837	398	11	5310-00-080-6004	392	9
5340-00-079-7837	400	9	5310-00-080-6004	431	3
5340-00-079-7837	425	18	5310-00-080-6004	438	8
5310-00-080-2411	432	5	5310-00-080-6004	440	6
5310-00-080-2411	487	13	5310-00-080-6004	441	8
5310-00-080-6004	2	3	5310-00-080-6004	461	9
5310-00-080-6004	8	13	5310-00-080-6004	471	10
5310-00-080-6004	12	21	5310-00-080-9786	88	27
5310-00-080-6004	23	2	5310-00-080-9786	215	9
5310-00-080-6004	24	7	5310-00-080-9786	222	10
5310-00-080-6004	26	5	5310-00-080-9786	339	8
5310-00-080-6004	30	7	5310-00-080-9786	346	6
5310-00-080-6004	36	17	5310-00-080-9786	347	3
5310-00-080-6004	38	17	5310-00-080-9786	426	18
5310-00-080-6004	41	13	5310-00-080-9786	427	21
5310-00-080-6004	66	6	5310-00-080-9786	467	1
5310-00-080-6004	79	20	5310-00-081-4219	5	4
5310-00-080-6004	97	7	5310-00-081-4219	74	2
5310-00-080-6004	128	54	5310-00-081-4219	142	28
5310-00-080-6004	129	23	5310-00-081-4219	143	37
5310-00-080-6004	133	5	5310-00-081-4219	150	28
5310-00-080-6004	134	2	5310-00-081-4219	151	37
5310-00-080-6004	142	14	5310-00-081-4219	154	7
5310-00-080-6004	143	14	5310-00-081-4219	160	14
5310-00-080-6004	150	14	5310-00-081-4219	162	13
5310-00-080-6004	151	14	5310-00-081-4219	178	14
5310-00-080-6004	155	18	5310-00-081-4219	180	11
5310-00-080-6004	163	6	5310-00-081-4219	189	4
5310-00-080-6004	164	2	5310-00-081-4219	190	2
5310-00-080-6004	175	9	5310-00-081-4219	198	20
5310-00-080-6004	187	9	5310-00-081-4219	199	2
5310-00-080-6004	189	1	5310-00-081-4219	204	7
5310-00-080-6004	190	4	5310-00-081-4219	209	3
5310-00-080-6004	245	22	5310-00-081-4219	211	14
5310-00-080-6004	251	5	5310-00-081-4219	212	12
5310-00-080-6004	266	25	5310-00-081-4219	225	30
5310-00-080-6004	270	32	5310-00-081-4219	226	15
5310-00-080-6004	272	25	5310-00-081-4219	230	4
5310-00-080-6004	273	2	5310-00-081-4219	235	7
5310-00-080-6004	274	11	5310-00-081-4219	236	7
5310-00-080-6004	275	2	5310-00-081-4219	243	24
5310-00-080-6004	277	2	5310-00-081-4219	244	10
5310-00-080-6004	280	25	5310-00-081-4219	273	8
5310-00-080-6004	281	25	5310-00-081-4219	273	17
5310-00-080-6004	328	18	5310-00-081-4219	277	33

CROSS REFERENCE INDEXES

NATIONAL STOCK NUMBER INDEX

STOCK NUMBER	FIGURE NO	ITEM NO	STOCK NUMBER	FIGURE NO	ITEM NO
5310-00-081-4219	280	46	5310-00-087-7493	160	10
5310-00-081-4219	281	46	5310-00-087-7493	205	2
5310-00-081-4219	288	19	5310-00-087-7493	205	36
5310-00-081-4219	321	19	5310-00-087-7493	206	1
5310-00-081-4219	321	31	5310-00-087-7493	206	9
5310-00-081-4219	324	8	5310-00-087-7493	206	21
5310-00-081-4219	325	27	5310-00-087-7493	206	29
5310-00-081-4219	329	6	5310-00-087-7493	238	22
5310-00-081-4219	333	23	5310-00-087-7493	240	7
5310-00-081-4219	363	15	5310-00-087-7493	268	18
5310-00-081-4219	376	15	5310-00-087-7493	270	14
5310-00-081-4219	377	14	5310-00-087-7493	285	5
5310-00-081-4219	378	29	5310-00-087-7493	286	10
5310-00-081-4219	402	7	5310-00-087-7493	288	7
5310-00-081-4219	429	6	5310-00-087-7493	292	17
5310-00-081-4219	432	4	5310-00-087-7493	293	5
5310-00-081-4219	433	8	5310-00-087-7493	398	23
5310-00-081-4219	436	9	5310-00-087-7493	401	8
5310-00-081-4219	473	2	5310-00-087-7493	429	17
5310-00-081-4219	474	6	5310-00-087-7493	436	8
5310-00-081-4219	480	5	5310-00-087-7493	490	2
5310-00-081-4219	487B	4	5310-00-088-0553	392	4
5310-00-081-4219	487D	9	5310-00-088-1251	50	13
5320-00-083-5009	52	9	5310-00-088-1251	169	12
5320-00-083-5009	197	1	5340-00-088-1254	75	33
5320-00-083-5009	208	6	5340-00-088-1254	84	17
5320-00-083-5009	211	4	5340-00-088-1254	88	15
5320-00-083-5009	270	17	5340-00-088-1254	155	1
5320-00-083-5009	296	12	5340-00-088-1254	416	26
5320-00-083-5009	311	5	5340-00-088-1254	176A	18
5320-00-083-5009	311	17	5340-00-088-1255	485	7
5320-00-083-5009	317	8	5325-00-088-6147	62	23
5320-00-083-5009	321	9	5340-00-088-6655	88	40
5320-00-083-5009	325	18	5340-00-088-6655	93	27
5320-00-083-5009	332	15	5340-00-088-6655	410	27
5320-00-083-5009	354	13	5305-00-088-8332	374	2
5320-00-083-5009	355	3	5305-00-088-8332	429	10
5320-00-083-5009	373	7	5305-00-088-8332	430	6
5320-00-083-5009	376	8	5305-00-088-8332	430	20
5320-00-083-5009	376	12	5305-00-088-8332	430	33
5310-00-087-7493	37	4	5330-00-089-0978	345	20
5310-00-087-7493	52	25	5330-00-089-0978	348	20
5310-00-087-7493	60	2	5331-00-089-0998	345	21
5310-00-087-7493	61	2	5331-00-089-0998	348	21
5310-00-087-7493	103	16	5365-00-090-5426	83	36
5310-00-087-7493	153	16	5365-00-090-5426	85	18
5310-00-087-7493	159	3	5365-00-090-5426	86	11

CROSS REFERENCE INDEXES

NATIONAL STOCK NUMBER INDEX

STOCK NUMBER	FIGURE NO	ITEM NO	STOCK NUMBER	FIGURE NO	ITEM NO
5340-00-091-3790	55	16	5940-00-113-9825	75	4
5340-00-091-3790	75	46	5940-00-113-9825	95	20
5340-00-091-3790	79	17	5940-00-113-9825	96	15
5340-00-091-3790	83	16	5940-00-113-9826	86	34
5340-00-091-3790	85	26	5940-00-114-1300	95	9
5340-00-091-3790	88	6	5940-00-114-1300	96	10
5340-00-091-3790	93	26	5940-00-114-1314	41	5
5340-00-091-3790	96	25	5940-00-114-1314	95	16
5340-00-091-3790	366	5	5940-00-114-1314	96	16
5340-00-091-3790	424	4	5940-00-114-1315	75	6
5340-00-091-3790	426	25	5940-00-114-1315	76	12
5340-00-091-3790	427	25	5940-00-114-1317	91	7
5340-00-091-3790	445	9	5935-00-115-2306	65	17
5340-00-091-3790	488	13	5935-00-115-2306	81	13
4730-00-100-3918	379	44	5935-00-115-2307	65	13
3110-00-100-5920	142	22	5935-00-115-2307	81	9
3110-00-100-5920	143	29	5935-00-115-2307	483	5
3110-00-100-5920	150	22	5940-00-115-2674	41	2
3110-00-100-5920	151	29	5940-00-115-2674	95	12
3110-00-100-5937	142	3	5940-00-115-2674	96	13
3110-00-100-5937	143	3	5940-00-115-2676	91	5
3110-00-100-5937	150	3	5940-00-115-2676	94	5
3110-00-100-5937	151	3	5940-00-115-2678	41	7
3110-00-100-6162	314	38	5940-00-115-2678	474	16
2540-00-104-2889	389	2	5940-00-115-2683	480	32
4910-00-105-2823	502	6	5940-00-115-2684	480	35
5940-00-107-1481	75	5	5940-00-115-2685	69	39
5940-00-107-1481	76	6	5940-00-115-4992	91	2
5940-00-107-1481	92	10	5940-00-115-4992	94	6
5940-00-107-1481	96	6	5940-00-115-5001	480	21
5330-00-107-3925	104	11	5940-00-115-5006	44	16
3110-00-108-9247	458	35	5940-00-115-5006	69	14
5975-00-111-3208	492	6	5940-00-115-5006	69	20
4720-00-111-5096	BULK	8	5940-00-115-5006	69	25
5310-00-112-2233	39	12	5940-00-115-5006	72	4
5940-00-113-0954	93	13	5940-00-115-5006	72	19
5940-00-113-3143	90	5	5940-00-115-5006	73	18
5940-00-113-3143	93	12	5940-00-115-5006	73	22
5940-00-113-3143	95	5	5940-00-115-5006	474	16
5940-00-113-3143	96	12	5940-00-115-5006	480	17
5940-00-113-3145	95	17	5940-00-115-5012	480	15
5940-00-113-3145	96	9	5940-00-115-5023	480	13
2540-00-113-4180	348	1	5305-00-115-9406	349	8
5940-00-113-9420	485	3	5305-00-115-9526	72	1
5940-00-113-9819	95	10	5305-00-115-9526	251	4
5940-00-113-9819	96	7	5305-00-115-9934	205	14
5940-00-113-9821	367	7	5320-00-117-6853	197	15

CROSS REFERENCE INDEXES

NATIONAL STOCK NUMBER INDEX

STOCK NUMBER	FIGURE NO	ITEM NO	STOCK NUMBER	FIGURE NO	ITEM NO
5320-00-117-6853	197	36	5310-00-124-9265	416	17
5320-00-117-6853	199	52	5310-00-124-9265	416	30
5320-00-117-6853	289	13	5310-00-124-9265	426	19
5320-00-117-6856	197	15	5310-00-124-9265	427	19
5320-00-117-6910	288	17	5310-00-124-9265	428	11
5320-00-117-7287	224	16	5310-00-124-9265	435	6
5320-00-117-7288	289	10	5310-00-124-9265	445	3
5320-00-117-7289	288	4	5310-00-124-9265	462	15
5320-00-117-7291	213	4	5310-00-124-9265	462	16
5320-00-119-6823	498	3	5310-00-124-9265	468	12
5310-00-124-9265	19	14	5310-00-124-9265	477	6
5310-00-124-9265	52	12	5310-00-124-9265	485	13
5310-00-124-9265	56	15	5310-00-124-9265	488	9
5310-00-124-9265	58	12	5310-00-126-3842	169	7
5310-00-124-9265	59	8	5310-00-126-5168	228	11
5310-00-124-9265	75	26	3040-00-127-5322	191	23
5310-00-124-9265	77	7	5930-00-130-5349	46	17
5310-00-124-9265	79	23	1640-00-132-9181	275	9
5310-00-124-9265	83	8	1640-00-132-9181	276	7
5310-00-124-9265	84	8	5975-00-133-8687	51	14
5310-00-124-9265	85	23	5975-00-133-8687	386	3
5310-00-124-9265	88	9	5975-00-133-8687	388	11
5310-00-124-9265	95	32	5930-00-134-5036	46	11
5310-00-124-9265	207	6	5305-00-135-3032	348	7
5310-00-124-9265	227	16	5330-00-135-6383	105	21
5310-00-124-9265	231	22	5331-00-137-3450	45	9
5310-00-124-9265	254	24	5330-00-138-0251	45	41
5310-00-124-9265	258	2	7690-00-138-5788	362	1
5310-00-124-9265	259	7	4720-00-139-3968	BULK	9
5310-00-124-9265	260	22	5315-00-140-1938	293	16
5310-00-124-9265	262	12	5310-00-141-3062	256	8
5310-00-124-9265	263	8	5310-00-141-3062	257	8
5310-00-124-9265	282	4	5310-00-141-3062	259	11
5310-00-124-9265	289	14	5310-00-141-3062	262	7
5310-00-124-9265	318	7	4730-00-142-2010	125	20
5310-00-124-9265	321	21	5940-00-143-4774	367	15
5310-00-124-9265	323	16	5940-00-143-4775	367	14
5310-00-124-9265	325	20	5940-00-143-4794	72	10
5310-00-124-9265	326	7	5940-00-143-4794	72	20
5310-00-124-9265	327	41	5940-00-143-4794	73	6
5310-00-124-9265	338	7	5340-00-150-1658	83	23
5310-00-124-9265	338	31	5340-00-150-1658	488	10
5310-00-124-9265	400	10	5315-00-150-2793	276	3
5310-00-124-9265	410	11	5305-00-150-3408	56	21
5310-00-124-9265	410	26	4730-00-150-6118	11	8
5310-00-124-9265	412	20	5340-00-151-9651	12	18
5310-00-124-9265	414	13	5340-00-151-9651	30	6

CROSS REFERENCE INDEXES

NATIONAL STOCK NUMBER INDEX

STOCK NUMBER	FIGURE NO	ITEM NO	STOCK NUMBER	FIGURE NO	ITEM NO
5340-00-151-9651	41	14	5935-00-167-7775	90	2
5120-00-152-2284	505	18	5935-00-167-7775	92	6
6145-00-152-6499	81	17	5935-00-167-7775	93	8
3110-00-155-6152	128	14	5935-00-167-7775	95	2
3110-00-155-6152	148	13	5935-00-167-7775	96	5
6240-00-155-7790	65	16	5935-00-167-7775	367	8
5975-00-156-3253	488	5	5935-00-167-7775	445	8
3110-00-162-3766	286	12	5310-00-171-1734	39	25
5310-00-164-1790	377	7	5331-00-171-6649	163	11
5305-00-164-7082	65	8	4730-00-172-0010	169	16
5305-00-164-7082	65	15	2520-00-172-1947	109	4
5310-00-166-8567	172	17	2520-00-172-1947	110	4
4730-00-166-9178	30	13	2520-00-172-1947	111	17
5310-00-167-0680	476	12	5325-00-174-9038	70	1
5310-00-167-0721	436	10	5325-00-174-9332	80	12
5310-00-167-0821	101	2	5325-00-174-9332	315	13
5310-00-167-0821	382	9	5325-00-174-9829	136	10
5310-00-167-0821	390	8	5325-00-174-9829	136	23
5310-00-167-0822	194	6	5325-00-174-9829	137	5
5310-00-167-0823	199	21	5310-00-177-7529	256	4
5310-00-167-0823	245	25	5310-00-177-7529	257	1
5310-00-167-0823	251	46	5310-00-177-7529	260	4
5310-00-167-0823	252	14	2540-00-177-8108	393	14
5310-00-167-0823	429	35	6220-00-179-4325	60	9
5310-00-167-0823	446	27	5305-00-179-8946	89	13
5310-00-167-0834	279	27	5305-00-179-8946	91	10
5310-00-167-0835	279	3	5305-00-179-8946	93	21
5310-00-167-0836	279	17	5305-00-179-8946	94	8
5310-00-167-0837	279	11	5305-00-179-8946	95	36
5310-00-167-0893	16	25	5306-00-180-2748	321	32
5310-00-167-0893	307	3	5305-00-180-4966	39	6
5310-00-167-0893	308	14	5305-00-180-4966	259	12
5310-00-167-0893	401	15	5305-00-180-4966	263	7
5935-00-167-7775	65	5	5305-00-180-4966	289	4
5935-00-167-7775	65	26	5305-00-180-4966	292	3
5935-00-167-7775	75	10	5305-00-180-4966	365	20
5935-00-167-7775	76	4	5306-00-182-2025	199	45
5935-00-167-7775	80	5	5306-00-182-2027	198	25
5935-00-167-7775	81	3	5306-00-182-2027	199	44
5935-00-167-7775	81	15	5306-00-182-2027	317	12
5935-00-167-7775	83	3	5306-00-182-2027	373	11
5935-00-167-7775	84	31	5306-00-182-2027	376	19
5935-00-167-7775	85	1	5305-00-182-9304	255	35
5935-00-167-7775	86	1	5935-00-184-6707	75	9
5935-00-167-7775	87	1	5935-00-184-6707	76	8
5935-00-167-7775	87	5	5935-00-184-6707	81	5
5935-00-167-7775	89	2	5935-00-184-6707	85	20

CROSS REFERENCE INDEXES

NATIONAL STOCK NUMBER INDEX

STOCK NUMBER	FIGURE NO	ITEM NO	STOCK NUMBER	FIGURE NO	ITEM NO
5935-00-184-6707	86	13	5310-00-208-1918	249	42
5120-00-184-8398	505	1	5310-00-208-1918	272	4
5310-00-184-8971	69	29	5310-00-208-1918	279	28
5310-00-184-8971	434	5	5310-00-208-1918	286	25
5310-00-184-8971	435	10	5306-00-208-3639	279	12
5325-00-184-9846	89	16	5310-00-208-9255	480	10
5325-00-184-9846	368	10	5310-00-208-9255	482	11
5325-00-185-0004	96	18	5310-00-209-0786	55	13
5331-00-185-0075	467	11	5310-00-209-0965	35	22
5331-00-185-0075	496	14	5310-00-209-0965	36	10
5325-00-185-0961	207	11	5310-00-209-0965	37	10
5315-00-187-9384	458	48	5310-00-209-0965	38	10
5305-00-191-3640	313	10	5310-00-209-0965	42	4
5305-00-191-3640	443	9	5310-00-209-0965	150	35
5305-00-191-3640	457	9	5310-00-209-0965	151	41
5330-00-193-0850	45	32	5310-00-209-0965	171	3
5340-00-193-4111	370	18	5310-00-209-0965	472	21
5310-00-194-1483	46	15	5310-00-209-0965	475	17
5310-00-194-1483	388	14	5935-00-214-0904	40	26
3110-00-198-0492	128	27	5935-00-214-0904	86	24
9905-00-198-2728	354	2	5935-00-214-0904	366	34
5310-00-198-6691	437	5	5935-00-214-0904	386	1
2540-00-200-4249	KITS	70	5935-00-214-0904	472	8
5342-00-200-7564	307	4	5935-00-214-0904	475	1
5342-00-200-7564	308	16	5935-00-214-0904	479	6
9905-00-202-3639	330	2	5935-00-214-0904	483	7
5325-00-202-4005	80	17	2540-00-216-5722	348	18
4730-00-204-3491	29	1	4520-00-217-5782	345	30
4730-00-204-3491	177	6	4520-00-217-5782	348	29
5305-00-204-4850	327	15	4730-00-221-2140	363	12
5940-00-204-8990	367	13	5970-00-221-5301	44	20
9905-00-205-2795	211	17	5970-00-221-5301	69	12
9905-00-205-2795	212	10	5970-00-221-5301	69	21
9905-00-205-2795	296	17	5970-00-221-5301	69	26
5305-00-206-2508	69	30	5970-00-221-5301	72	5
5306-00-207-2221	64	4	5970-00-221-5301	72	17
5306-00-207-2221	83	34	5970-00-221-5301	313	17
5930-00-207-9422	51	3	4010-00-224-482	BULK	49
5310-00-208-1918	88	4	5305-00-225-3842	5	16
5310-00-208-1918	202	41	5305-00-225-3842	202	10
5310-00-208-1918	203	29	5305-00-225-3842	203	5
5310-00-208-1918	205	38	5305-00-225-3842	204	5
5310-00-208-1918	206	16	5305-00-225-3842	308	9
5310-00-208-1918	243	28	5305-00-225-3842	430	16
5310-00-208-1918	244	17	5305-00-225-3843	21	17
5310-00-208-1918	248	5	5305-00-225-3843	42	6
5310-00-208-1918	249	18	5305-00-225-3843	95	42

CROSS REFERENCE INDEXES

NATIONAL STOCK NUMBER INDEX

STOCK NUMBER	FIGURE NO	ITEM NO	STOCK NUMBER	FIGURE NO	ITEM NO
5305-00-225-3843	153	5	5306-00-225-8499	153	27
5305-00-225-3843	169	10	5306-00-225-8499	154	10
5305-00-225-3843	169	30	5306-00-225-8499	203	20
5305-00-225-3843	203	1	5306-00-225-8499	205	31
5305-00-225-3843	203	26	5306-00-225-8499	206	2
5305-00-225-3843	204	1	5306-00-225-8499	206	18
5305-00-225-3843	227	28	5306-00-225-8499	268	4
5305-00-225-3843	247	1	5306-00-225-8499	329	11
5305-00-225-3843	249	2	5306-00-225-8499	333	24
5305-00-225-3843	250	5	5306-00-225-8499	339	20
5305-00-225-3843	252	12	5306-00-225-8499	402	5
5305-00-225-3843	254	13	5306-00-225-8499	409	1
5305-00-225-3843	266	21	5306-00-225-8499	410	8
5305-00-225-3843	267	5	5306-00-225-8499	411	1
5305-00-225-3843	277	23	5306-00-225-8499	413	1
5305-00-225-3843	285	14	5306-00-225-8499	414	7
5305-00-225-3843	286	36	5306-00-225-8499	415	1
5305-00-225-3843	292	11	5306-00-225-8499	416	7
5305-00-225-3843	312	1	5306-00-225-8499	418	6
5305-00-225-3843	334	6	5306-00-225-8499	419	7
5305-00-225-3843	343	18	5306-00-225-8499	420	1
5305-00-225-3843	352	3	5306-00-225-8499	421	8
5305-00-225-3843	366	17	5306-00-225-8499	422	3
5305-00-225-3843	368	34	5306-00-225-8499	423	8
5305-00-225-3843	417	3	5306-00-225-8499	428	7
5305-00-225-3843	430	42	5306-00-225-8503	329	8
5305-00-225-3843	446	14	5306-00-225-8511	12	13
5305-00-225-3843	459	3	5306-00-225-9089	280	45
5305-00-225-3843	475	6	5306-00-225-9089	281	45
5305-00-225-3843	484	14	5306-00-225-9097	392	3
5305-00-225-3843	486	12	5306-00-226-4822	35	16
5305-00-225-3843	492	15	5306-00-226-4823	143	36
5305-00-225-3843	494	11	5306-00-226-4823	151	36
5310-00-225-5328	79	14	5306-00-226-4824	273	19
5310-00-225-5328	482	17	5306-00-226-4824	43B	14
5310-00-225-6993	188	32	5306-00-226-4824	488	23
5305-00-225-7211	5	3	5306-00-226-4825	19	20
5306-00-225-8496	180	13	5306-00-226-4825	100	17
5306-00-225-8498	213	9	5306-00-226-4825	116	18
5306-00-225-8498	250	20	5306-00-226-4825	230	26
5306-00-225-8498	418	4	5306-00-226-4825	234	6
5306-00-225-8498	419	5	5306-00-226-4825	480	3
5306-00-225-8498	420	3	5306-00-226-4825	487	16
5306-00-225-8498	421	1	5306-00-226-4825	487B	3
5306-00-225-8498	422	1	5306-00-226-4826	230	19
5306-00-225-8498	423	1	5306-00-226-4826	231	12
5306-00-225-8499	74	1	5306-00-226-4826	273	7

CROSS REFERENCE INDEXES

NATIONAL STOCK NUMBER INDEX

STOCK NUMBER	FIGURE NO	ITEM NO	STOCK NUMBER	FIGURE NO	ITEM NO
5306-00-226-4826	277	7	5305-00-226-4831	288	23
5306-00-226-4826	328	8	5306-00-226-4832	121	8
5306-00-226-4827	83	30	5306-00-226-4833	211	15
5306-00-226-4827	204	6	5306-00-226-4833	212	11
5306-00-226-4827	225	29	5306-00-226-4833	242	4
5306-00-226-4827	226	14	5306-00-226-4833	377	15
5306-00-226-4827	242	10	5306-00-226-4834	211	16
5306-00-226-4827	287	20	5306-00-226-4834	212	13
5306-00-226-4827	329	18	5306-00-226-4835	209	16
5306-00-226-4827	473	1	5306-00-226-4835	338	24
5306-00-226-4827	474	7	5306-00-226-4835	429	5
5306-00-226-4828	160	13	5306-00-226-4838	189	3
5306-00-226-4828	162	14	5930-00-226-6429	46	6
5306-00-226-4828	225	2	5305-00-226-7237	12	37
5306-00-226-4828	226	13	5305-00-227-1543	333	31
5306-00-226-4828	284	1	4710-00-228-2177	BULK	45
5306-00-226-4828	288	26	4730-00-230-2959	496	25
5306-00-226-4828	292	13	5315-00-234-1861	268	9
5306-00-226-4828	340	1	4030-00-237-8741	314	18
5306-00-226-4828	346	1	5315-00-239-8032	186	8
5306-00-226-4828	363	23	5315-00-239-8032	188	19
5306-00-226-4828	374	22	5315-00-239-8032	188	35
5306-00-226-4828	417	4	5305-00-240-0194	67	2
5306-00-226-4828	418	7	5305-00-240-0194	88	10
5306-00-226-4828	419	8	5305-00-240-0194	169	22
5306-00-226-4828	420	5	5305-00-240-0194	197	33
5306-00-226-4828	421	7	5305-00-240-0194	199	59
5306-00-226-4828	422	9	5305-00-240-0194	205	4
5306-00-226-4828	423	3	5305-00-240-0194	206	7
5306-00-226-4828	439	1	5305-00-240-0194	225	50
5306-00-226-4828	487D	8	5305-00-240-0194	226	30
5306-00-226-4829	144	12	5305-00-240-0194	248	28
5306-00-226-4829	152	12	5305-00-240-0194	286	31
5306-00-226-4829	211	31	5305-00-240-0194	327	26
5306-00-226-4829	212	29	5305-00-240-0194	411	5
5306-00-226-4829	225	26	5305-00-240-0194	460	2
5306-00-226-4829	226	8	5315-00-240-0251	243	32
5306-00-226-4829	328	2	5305-00-240-6541	227	50
5306-00-226-4829	390	6	5305-00-240-6668	85	3
5306-00-226-4829	417	7	5305-00-240-6668	88	1
5306-00-226-4829	423	7	5305-00-240-6668	327	48
5306-00-226-4829	432	2	5120-00-240-8702	505	4
5306-00-226-4829	461	8	4720-00-241-4435	BULK	24
5305-00-226-4831	121	9	5310-00-241-6658	154	5
5305-00-226-4831	242	2	5310-00-241-6658	198	19
5305-00-226-4831	269	20	5310-00-241-6658	199	1
5305-00-226-4831	279	35	5310-00-241-6658	273	16

CROSS REFERENCE INDEXES

NATIONAL STOCK NUMBER INDEX

STOCK NUMBER	FIGURE NO	ITEM NO	STOCK NUMBER	FIGURE NO	ITEM NO
5310-00-241-6658	277	35	5310-00-251-4503	416	11
5310-00-241-6658	280	47	5310-00-251-4503	446	9
5310-00-241-6658	281	47	5310-00-251-4503	447	5
5310-00-241-6658	317	11	5310-00-251-4503	448	8
5310-00-241-6658	321	30	5310-00-251-4503	449	2
5310-00-241-6658	373	8	5310-00-251-4503	450	1
5310-00-241-6658	376	18	5310-00-251-4503	486	3
5310-00-241-6658	378	28	5905-00-251-7145	348	4
5310-00-241-6658	389	14	5305-00-253-5609	133	3
5310-00-241-6658	402	8	5305-00-253-5614	197	35
5310-00-241-6658	415	4	5305-00-253-5626	191	18
5310-00-241-6658	433	7	5305-00-253-5627	357	8
5310-00-241-6659	170	14	4730-00-254-6211	334	9
5310-00-241-6921	62	20	4730-00-254-6227	334	7
6150-00-242-4885	313	24	5315-00-255-5580	268	6
5315-00-243-1169	191	21	3120-00-255-5697	111	13
4020-00-246-0688	BULK	3	3120-00-255-5697	112	12
4810-00-248-1635	348	40	5905-00-258-6788	59	12
5325-00-249-6345	333	33	4730-00-260-8285	366	15
5310-00-251-4503	63	5	4730-00-260-8285	384	5
5310-00-251-4503	234	17	5310-00-261-7340	341	8
5310-00-251-4503	246	9	5310-00-261-8278	69	31
5310-00-251-4503	246	14	5330-00-262-8195	BULK	48
5310-00-251-4503	247	13	5325-00-263-6648	496	3
5310-00-251-4503	247	24	5325-00-263-6651	79	25
5310-00-251-4503	248	9	4730-00-266-0535	334	19
5310-00-251-4503	249	6	4730-00-266-0536	366	12
5310-00-251-4503	249	21	4730-00-266-0538	366	14
5310-00-251-4503	249	33	4730-00-267-8945	401	2
5310-00-251-4503	251	15	5305-00-267-8952	387	7
5310-00-251-4503	251	25	5305-00-267-8953	279	2
5310-00-251-4503	251	39	5305-00-267-8953	388	12
5310-00-251-4503	252	17	5305-00-267-8953	43B	32
5310-00-251-4503	252	39	5305-00-267-8953	485	15
5310-00-251-4503	253	5	5305-00-267-8954	228	15
5310-00-251-4503	253	12	6680-00-269-0335	488	22
5310-00-251-4503	253	15	5305-00-269-2811	392	8
5310-00-251-4503	253	32	5305-00-269-3233	363	10
5310-00-251-4503	253	39	5305-00-269-3241	392	7
5310-00-251-4503	254	4	5305-00-269-3242	390	15
5310-00-251-4503	254	12	5310-00-269-3466	225	13
5310-00-251-4503	255	4	4730-00-270-4606	335	16
5310-00-251-4503	255	12	4730-00-270-4606	336	13
5310-00-251-4503	255	14	5510-00-270-6031	BULK	71
5310-00-251-4503	255	25	5325-00-270-8891	380	5
5310-00-251-4503	255	29	5310-00-274-8710	343	5
5310-00-251-4503	260	16	5310-00-274-8710	497	2

CROSS REFERENCE INDEXES

NATIONAL STOCK NUMBER INDEX

STOCK NUMBER	FIGURE NO	ITEM NO	STOCK NUMBER	FIGURE NO	ITEM NO
5310-00-274-8710	498	11	5325-00-291-9366	333	34
5310-00-274-8715	249	3	5325-00-291-9366	380	7
5310-00-274-8715	315	11	5306-00-292-8253	277	37
5310-00-274-9364	238	3	5120-00-293-0045	507	1
5320-00-275-8344	337	7	5330-00-297-6329	47	14
5325-00-276-6051	96	21	5310-00-297-8836	66A	7
5325-00-276-6090	496	21	5331-00-297-9990	72	24
5325-00-276-6091	369	4	5315-00-298-1481	437	11
5325-00-276-6228	489	6	6220-00-299-7425	63	3
5325-00-276-6343	70	14	6220-00-299-7425	63	9
5325-00-276-6343	473	9	6220-00-299-7426	63	3
5325-00-276-6343	481	10	6220-00-299-7426	63	9
4730-00-277-6347	366	24	2920-00-302-6342	KITS	102
4730-00-277-6347	384	15	5930-00-307-8856	46	19
5365-00-277-7341	142	5	5325-00-331-4774	43B	11
5365-00-277-7341	143	5	5310-00-333-7341	345	24
5365-00-277-7341	151	5	5310-00-333-7341	348	3
4730-00-278-2523	331	30	5935-00-333-9414	80	10
4730-00-278-2523	385	4	5935-00-333-9414	84	28
4730-00-278-2523	388	5	5935-00-333-9414	85	10
4730-00-278-3721	178	23	5935-00-333-9414	86	6
4730-00-278-3828	17	5	2805-00-336-1716	4	15
5325-00-281-8642	316	3	5935-00-338-2822	282	13
5325-00-281-8643	316	5	2530-00-340-1405	157	9
5325-00-281-8643	319	2	2530-00-340-1405	158	5
5325-00-281-8643	322	2	5930-00-345-5455	345	10
5325-00-282-1830	205	29	5930-00-345-5455	348	14
5340-00-282-7509	84	15	5325-00-349-8518	121	15
5340-00-282-7517	327	25	5310-00-350-2655	62	6
5340-00-282-7537	246	22	2520-00-352-2168	169	29
5340-00-282-7537	366	28	5330-00-353-0959	63	10
5340-00-282-7537	386	10	5305-00-353-0969	62	18
5940-00-283-5280	367	11	5310-00-355-5645	44	7
5310-00-285-7037	269	28	4730-00-359-9487	12	4
5315-00-285-7161	365	8	4730-00-366-3011	178	19
5315-00-285-7161	368	12	5305-00-366-3337	34	1
5325-00-285-8363	424	6	5325-00-371-8108	224	12
5340-00-286-2494	327	46	5325-00-371-8108	316	2
4730-00-287-1706	159	6	5325-00-371-8108	316	6
4730-00-287-1706	160	20	5325-00-371-8108	319	3
4730-00-287-1706	161	14	5325-00-371-8108	322	3
4730-00-287-1706	162	22	5325-00-371-8108	324	3
4730-00-287-1706	487B	8	5325-00-371-8108	375	2
4820-00-287-5627	335	17	5325-00-371-8108	375	5
4820-00-287-5627	336	14	5325-00-371-8108	378	2
5325-00-290-1960	70	13	5325-00-371-8108	378	5
5325-00-291-9366	92	13	5315-00-376-9034	433	10

CROSS REFERENCE INDEXES

NATIONAL STOCK NUMBER INDEX

STOCK NUMBER	FIGURE NO	ITEM NO	STOCK NUMBER	FIGURE NO	ITEM NO
3030-00-379-2815	32	2	5310-00-407-9566	487	15
5340-00-385-8820	17	11	5310-00-407-9566	175A	13
5340-00-385-8820	27	12	5310-00-407-9566	176A	3
5305-00-390-0524	83	29	5340-00-408-2432	191	24
5305-00-390-0524	272	8	5310-00-409-3333	144	3
5310-00-393-6685	83	37	5310-00-409-3333	152	3
5310-00-393-6685	85	19	5310-00-409-3333	181	16
5310-00-393-6685	86	12	5310-00-409-3333	182	2
5940-00-399-6676	75	12	5310-00-409-3333	183	13
5310-00-401-5321	237	13	5310-00-409-3333	184	19
5310-00-401-5321	258	6	5310-00-409-3333	188	28
5310-00-401-5321	262	4	5310-00-409-3333	195	13
5310-00-402-2778	51	12	5310-00-409-3333	270	35
3110-00-403-1488	172	20	5310-00-409-3333	271	5
5305-00-403-5130	345	14	5310-00-409-3333	271	22
5305-00-403-5130	348	5	5310-00-409-3333	456	20
5305-00-403-5130	348	13	5310-00-409-3333	471	3
3110-00-406-9608	148	18	5310-00-409-3355	176A	2
5310-00-407-9566	19	19	5315-00-417-5223	238	13
5310-00-407-9566	35	15	5310-00-419-0876	36	7
5310-00-407-9566	59	4	5310-00-419-0876	38	7
5310-00-407-9566	74	10	5310-00-419-0876	39	10
5310-00-407-9566	136	15	5310-00-419-0876	476	9
5310-00-407-9566	137	2	6240-00-419-3185	49	2
5310-00-407-9566	178	15	5306-00-425-8569	69	40
5310-00-407-9566	180	12	5310-00-429-3135	39	43
5310-00-407-9566	205	32	5310-00-429-3156	39	44
5310-00-407-9566	206	19	5310-00-429-3453	39	42
5310-00-407-9566	211	30	5310-00-432-3760	441	10
5310-00-407-9566	212	30	5305-00-432-4165	49	11
5310-00-407-9566	225	31	5305-00-432-4170	403	12
5310-00-407-9566	226	16	5305-00-432-4170	433	4
5310-00-407-9566	231	13	5305-00-432-4201	485	5
5310-00-407-9566	268	5	5305-00-432-4205	208	9
5310-00-407-9566	269	15	5305-00-432-4205	280	34
5310-00-407-9566	287	19	5305-00-432-4205	281	34
5310-00-407-9566	328	7	5305-00-432-4205	331	29
5310-00-407-9566	329	7	5305-00-432-4253	395	1
5310-00-407-9566	340	10	5305-00-432-4253	396	2
5310-00-407-9566	373	9	5305-00-432-4254	446	32
5310-00-407-9566	430	13	3110-00-436-3248	128	50
5310-00-407-9566	432	3	5340-00-438-1833	313	4
5310-00-407-9566	43B	15	5340-00-438-1833	443	4
5310-00-407-9566	454	3	5340-00-438-1836	477	9
5310-00-407-9566	461	6	4730-00-439-6021	335	1
5310-00-407-9566	473	5	5325-00-442-5845	155	7
5310-00-407-9566	474	8	5325-00-442-5845	280	42

CROSS REFERENCE INDEXES

NATIONAL STOCK NUMBER INDEX

STOCK NUMBER	FIGURE NO	ITEM NO	STOCK NUMBER	FIGURE NO	ITEM NO
5325-00-442-5845	281	42	5935-00-462-6603	93	9
5325-00-442-5845	289	19	5935-00-462-6603	445	7
5305-00-442-7347	40	49	5331-00-463-0200	60	10
6220-00-443-0589	62	21	5310-00-463-0268	62	25
5930-00-445-9274	55	6	5305-00-470-3321	74	11
5930-00-445-9274	56	18	5305-00-470-3321	283	26
5310-00-447-8774	103	2	4730-00-471-3102	366	13
5310-00-447-8774	127	1	5310-00-471-9243	131	2
5310-00-449-2376	167	26	2920-00-472-1723	KITS	68
5310-00-449-2376	191	16	5310-00-472-2963	421	9
5310-00-449-2381	35	7	5310-00-472-2963	422	4
5325-00-449-3001	208	5	2590-00-473-6331	392	6
3120-00-450-1905	45	18	4730-00-476-5859	302	6
5331-00-451-0118	128	51	4730-00-476-5859	303	15
5331-00-451-0118	129	26	4730-00-476-5859	305	8
5975-00-451-5001	5	8	4730-00-476-5859	306	6
5975-00-451-5001	435	8	4730-00-476-5859	309	4
2590-00-454-3620	93	23	4730-00-476-5859	310	6
2590-00-454-3620	95	37	4730-00-476-7127	302	3
2590-00-454-3620	96	30	4730-00-476-7127	303	4
2590-00-454-3620	303	9	4730-00-476-7127	304	11
2590-00-454-3620	304	5	4730-00-476-7127	305	5
2590-00-454-3620	338	2	4730-00-476-7127	306	3
2590-00-454-3620	339	6	4730-00-476-7127	309	10
2590-00-454-3620	410	32	5310-00-477-6768	482	8
2590-00-454-3620	412	13	5305-00-478-0273	73	2
5305-00-456-2582	345	8	5305-00-482-6825	254	29
5305-00-456-2582	348	6	5305-00-482-6825	281	7
5305-00-456-2582	348	15	5310-00-482-9493	33	6
5310-00-460-4490	218	6	5310-00-483-8791	321	18
5310-00-460-4490	257	5	5310-00-483-8791	376	14
5331-00-462-0907	61	11	5310-00-483-8791	382	6
5935-00-462-6603	65	4	5310-00-483-8791	389	10
5935-00-462-6603	65	27	5310-00-483-8791	397	5
5935-00-462-6603	75	11	3120-00-485-1017	165	3
5935-00-462-6603	76	14	3120-00-485-1017	166	8
5935-00-462-6603	80	2	8145-00-485-8250	126	3
5935-00-462-6603	81	7	5310-00-488-3889	2	8
5935-00-462-6603	83	20	5310-00-488-3889	140	1
5935-00-462-6603	84	32	5310-00-488-3889	147	1
5935-00-462-6603	85	15	5310-00-488-3889	179	3
5935-00-462-6603	86	8	5310-00-488-3889	180	4
5935-00-462-6603	87	2	5310-00-488-3889	181	9
5935-00-462-6603	87	4	5310-00-488-3889	182	4
5935-00-462-6603	89	5	5310-00-488-3889	183	14
5935-00-462-6603	90	6	5310-00-488-3889	184	1
5935-00-462-6603	92	4	5310-00-488-3889	185	7

CROSS REFERENCE INDEXES

NATIONAL STOCK NUMBER INDEX

STOCK NUMBER	FIGURE NO	ITEM NO	STOCK NUMBER	FIGURE NO	ITEM NO
5310-00-488-3889	186	7	5320-00-526-2945	213	30
5310-00-488-3889	187	11	4730-00-529-1237	384	3
5310-00-488-3889	188	5	6145-00-538-8219	BULK	69
5310-00-488-3889	188	38	6145-00-538-8222	BULK	68
5310-00-488-3889	191	1	4730-00-541-0793	31	1
5310-00-488-3889	199	22	4710-00-541-4935	288	11
5310-00-488-3889	242	8	5305-00-543-2419	1	6
5310-00-488-3889	245	26	5305-00-543-2419	2	2
5310-00-488-3889	251	47	5305-00-543-2419	23	8
5310-00-488-3889	270	22	5305-00-543-2419	251	43
5310-00-488-3889	283	18	5305-00-543-2419	329	1
5310-00-488-3889	315	5	5305-00-543-2419	341	1
5310-00-488-3889	429	36	5305-00-543-2419	425	14
5310-00-488-3889	441	5	5305-00-543-2419	463	1
5310-00-488-3889	442	4	5305-00-543-2866	272	34
5310-00-488-3889	444	3	5305-00-543-2866	273	5
5310-00-488-3889	446	28	5305-00-543-2866	274	26
5310-00-488-3889	453	1	5305-00-543-2866	275	21
5310-00-488-3889	455	6	5305-00-543-2866	276	23
5310-00-488-3889	456	17	5305-00-543-2866	33A	17
5310-00-488-3889	463	9	5305-00-543-2866	33B	12
5310-00-488-3889	471	1	5325-00-543-2902	345	38
5310-00-488-3889	487A	6	5325-00-543-2902	348	37
5310-00-488-3889	487B	1	5305-00-543-4372	60	1
5305-00-489-0743	77	18	5305-00-543-4372	61	1
5305-00-489-0743	88	14	5305-00-543-4372	240	6
5305-00-489-0743	88	28	5305-00-543-4372	332	35
5305-00-489-0743	443	5	5305-00-543-4372	370	26
5305-00-489-0743	444	6	5305-00-543-4709	337	2
5305-00-489-0743	457	16	5310-00-543-5101	88	49
5340-00-489-5684	269	8	5305-00-543-5828	52	14
4720-00-491-0102	BULK	27	5940-00-549-6581	69	15
5340-00-492-2313	208	11	5940-00-549-6583	69	18
2910-00-493-2138	9	3	5310-00-550-1130	68	7
5330-00-493-3876	KITS	84	5310-00-550-1130	269	32
5320-00-493-4101	300	8	5310-00-550-1130	327	14
5330-00-497-4633	128	8	5310-00-550-1130	366	4
5310-00-498-6675	395	9	5310-00-550-1130	384	7
5305-00-499-7694	51	9	5310-00-550-1130	484	6
5940-00-503-6184	41	17	5305-00-550-1537	205	24
3030-00-504-8682	490	11	5310-00-550-3714	380	12
6105-00-512-9225	333	13	5310-00-550-4725	256	7
5325-00-514-1299	143	21	5975-00-553-6995	380	13
5325-00-514-1299	151	21	2640-00-555-2834	167	11
5310-00-515-8776	453	14	5640-00-555-3011	467	12
5940-00-520-2447	313	18	4720-00-555-8015	BULK	28
2540-00-525-7067	191	15	4730-00-555-8292	16	43

CROSS REFERENCE INDEXES

NATIONAL STOCK NUMBER INDEX

STOCK NUMBER	FIGURE NO	ITEM NO	STOCK NUMBER	FIGURE NO	ITEM NO
2520-00-557-6619	100	16	5310-00-582-5965	342	5
5310-00-559-0070	379	12	5310-00-582-5965	343	15
5315-00-559-7467	99	13	5310-00-582-5965	365	5
5340-00-565-5378	273	12	5310-00-582-5965	368	23
4240-00-565-6059	307	2	5310-00-582-5965	387	8
4240-00-565-6059	308	8	5310-00-582-5965	410	37
4730-00-567-1630	393	13	5310-00-582-5965	414	16
5310-00-568-6077	100	12	5310-00-582-5965	416	20
5975-00-570-9598	18	9	5310-00-582-5965	425	8
5975-00-570-9598	41	15	5310-00-582-5965	426	5
5975-00-570-9598	77	28	5310-00-582-5965	427	9
5975-00-570-9598	379	7	5310-00-582-5965	428	19
5975-00-570-9598	381	2	5310-00-582-5965	430	41
5935-00-572-9180	483	6	5310-00-582-5965	443	2
5315-00-576-0265	132	30	5310-00-582-5965	444	8
5305-00-576-2335	345	18	5310-00-582-5965	444	9
5305-00-576-2335	348	12	5310-00-582-5965	446	12
5310-00-576-5752	333	17	5310-00-582-5965	451	2
5310-00-576-5752	349	4	5310-00-582-5965	467	5
6220-00-577-3434	63	1	5310-00-582-5965	492	16
6210-00-578-7970	311	12	5310-00-582-5965	492	18
6210-00-578-7970	312	8	5310-00-582-5965	498	18
5310-00-579-5554	72	12	5310-00-582-5965	66A	6
3110-00-580-3843	128	38	5305-00-582-9501	37	8
5331-00-580-6586	177	8	5305-00-582-9501	75	24
5331-00-580-6586	178	10	5305-00-582-9501	77	5
5331-00-580-6586	470	3	5305-00-582-9501	83	10
5331-00-580-6586	176A	25	5305-00-582-9501	84	4
5310-00-582-5965	28	7	5305-00-582-9501	85	22
5310-00-582-5965	53	4	5305-00-582-9501	88	7
5310-00-582-5965	62	26	5305-00-582-9501	216	4
5310-00-582-5965	75	35	5305-00-582-9501	327	43
5310-00-582-5965	93	18	5305-00-582-9501	468	13
5310-00-582-5965	155	12	5305-00-582-9501	488	6
5310-00-582-5965	156	17	5310-00-584-5005	468	9
5310-00-582-5965	205	23	5310-00-584-5272	69	2
5310-00-582-5965	228	14	5310-00-584-5272	103	19
5310-00-582-5965	237	11	5310-00-584-5272	156	21
5310-00-582-5965	240	24	5310-00-584-5272	174	7
5310-00-582-5965	250	9	5310-00-584-5272	240	2
5310-00-582-5965	267	6	5310-00-584-5272	240	12
5310-00-582-5965	286	37	5310-00-584-5272	271	16
5310-00-582-5965	287	11	5310-00-584-5272	271	28
5310-00-582-5965	308	5	5310-00-584-5272	277	39
5310-00-582-5965	311	3	5310-00-584-5272	33A	2
5310-00-582-5965	313	2	5310-00-584-5272	363	19
5310-00-582-5965	327	39	5310-00-584-5272	369	1

CROSS REFERENCE INDEXES

NATIONAL STOCK NUMBER INDEX

STOCK NUMBER	FIGURE NO	ITEM NO	STOCK NUMBER	FIGURE NO	ITEM NO
5310-00-584-5272	410	35	5310-00-637-9541	24	25
5310-00-584-5272	412	26	5310-00-637-9541	34	14
5310-00-584-5272	424	7	5310-00-637-9541	35	3
5310-00-584-5272	434	3	5310-00-637-9541	35	20
5310-00-584-5272	435	7	5310-00-637-9541	36	15
5310-00-584-5272	453	2	5310-00-637-9541	37	3
4010-00-585-2108	BULK	2	5310-00-637-9541	38	15
4730-00-585-2653	169	25	5310-00-637-9541	43	48
5331-00-585-6663	21	7	5310-00-637-9541	44	3
4730-00-586-8463	27	8	5310-00-637-9541	52	24
4730-00-595-1078	399	9	5310-00-637-9541	62	7
5310-00-595-6057	42	3	5310-00-637-9541	64	13
5310-00-595-6057	488	15	5310-00-637-9541	68	3
5310-00-595-6612	39	9	5310-00-637-9541	70	10
5310-00-595-7237	412	6	5310-00-637-9541	72	2
5310-00-595-7237	482	13	5310-00-637-9541	75	43
5310-00-595-7486	183	3	5310-00-637-9541	77	2
5310-00-595-7486	185	13	5310-00-637-9541	79	19
5310-00-595-7486	187	17	5310-00-637-9541	83	33
5310-00-595-7486	188	15	5310-00-637-9541	88	38
5305-00-600-8993	324	38	5310-00-637-9541	89	7
5305-00-601-7729	39	7	5310-00-637-9541	124	15
5935-00-605-9322	85	11	5310-00-637-9541	125	15
5935-00-605-9322	86	16	5310-00-637-9541	164	3
5305-00-614-3423	46	12	5310-00-637-9541	169	2
5310-00-614-3505	35	8	5310-00-637-9541	174	14
5935-00-614-3959	80	7	5310-00-637-9541	175	8
5935-00-614-3959	85	7	5310-00-637-9541	205	35
5935-00-614-3959	86	3	5310-00-637-9541	206	22
5310-00-615-1556	43B	24	5310-00-637-9541	286	9
5930-00-615-7897	367	6	5310-00-637-9541	286	35
5930-00-615-9376	52	30	5310-00-637-9541	328	17
5315-00-616-4261	133	12	5310-00-637-9541	33A	16
5305-00-616-4831	43B	35	5310-00-637-9541	33B	2
5315-00-616-5501	476	8	5310-00-637-9541	340	3
5315-00-616-5514	43	4	5310-00-637-9541	352	2
5315-00-616-5514	175A	7	5310-00-637-9541	363	11
5315-00-616-5526	35	9	5310-00-637-9541	372	5
6685-00-618-1822	363	28	5310-00-637-9541	379	23
5120-00-618-6902	504	14	5310-00-637-9541	38A	3
5310-00-619-1148	482	12	5310-00-637-9541	401	12
5310-00-625-5756	43B	16	5310-00-637-9541	43B	31
5310-00-637-9541	1	4	5310-00-637-9541	443	12
5310-00-637-9541	2	5	5310-00-637-9541	443	13
5310-00-637-9541	5	13	5310-00-637-9541	457	6
5310-00-637-9541	16	23	5310-00-637-9541	459	2
5310-00-637-9541	23	17	5310-00-637-9541	468	8

CROSS REFERENCE INDEXES

NATIONAL STOCK NUMBER INDEX

STOCK NUMBER	FIGURE NO	ITEM NO	STOCK NUMBER	FIGURE NO	ITEM NO
5310-00-637-9541	472	15	5340-00-689-9514	92	20
5310-00-637-9541	475	23	5340-00-689-9514	95	24
5310-00-637-9541	476	2	5340-00-689-9514	488	7
5310-00-637-9541	481	7	5975-00-697-7769	85	12
5310-00-637-9541	490	9	5975-00-697-7769	86	17
5305-00-638-0714	35	17	4730-00-701-7737	345	35
5305-00-638-0714	43	55	4730-00-701-7737	348	33
5305-00-638-8920	341	9	5340-00-702-2848	41	14
5305-00-638-8920	426	14	5340-00-702-2848	473	4
5305-00-638-8920	427	13	5340-00-702-2848	474	2
4030-00-641-3921	275	11	5340-00-702-2848	475	30
5530-00-641-6069	BULK	47	5360-00-704-4253	191	22
5310-00-641-9464	251	5	6145-00-705-6674	BULK	70
5930-00-655-1514	367	5	5940-00-705-6702	86	35
5310-00-655-9370	438	18	5940-00-705-6703	75	17
5305-00-655-9711	73	12	5940-00-705-6703	76	17
5310-00-655-9860	80	8	5940-00-705-6703	93	10
5310-00-655-9860	85	8	5940-00-705-6708	75	7
5310-00-655-9860	86	4	5940-00-705-6708	76	10
5310-00-656-0114	476	13	5940-00-705-6708	80	6
5310-00-656-0114	476	25	5940-00-705-6708	83	4
5305-00-660-2832	456	15	5940-00-705-6708	85	21
5120-00-677-2259	500	1	5940-00-705-6708	86	14
5342-00-678-1753	160	18	5940-00-705-6708	87	3
5342-00-678-1753	162	18	5940-00-705-6709	76	5
5342-00-678-1753	487A	8	5940-00-705-6709	85	30
5930-00-679-5925	345	15	5940-00-705-6709	86	20
5930-00-679-5925	348	38	5940-00-705-6709	89	6
5930-00-681-4727	396	10	5940-00-705-6711	75	16
5310-00-682-0775	257	6	5940-00-705-6711	76	16
5325-00-682-1762	116	19	5940-00-705-6711	80	4
2590-00-683-0598	68	5	5940-00-705-6711	81	18
5120-00-683-8597	505	5	5940-00-705-6711	83	1
4720-00-684-4033	BULK	18	5940-00-705-6711	86	36
5310-00-685-3228	327	11	5940-00-705-6714	75	2
5935-00-686-2599	85	16	5940-00-705-6715	75	15
5935-00-686-2599	86	9	5940-00-705-6715	76	15
5305-00-688-2111	103	13	5940-00-705-6732	41	7
5305-00-688-2111	144	16	5305-00-709-8283	234	19
5305-00-688-2111	152	16	5305-00-716-7680	180	14
5305-00-688-2111	438	7	5305-00-719-5003	248	29
3110-00-689-4076	128	2	5305-00-719-5017	246	11
5305-00-689-7472	148	26	5305-00-719-5021	339	14
5340-00-689-9514	84	33	5305-00-719-5021	409	12
5340-00-689-9514	85	4	5305-00-719-5021	413	3
5340-00-689-9514	88	2	5305-00-719-5021	415	3
5340-00-689-9514	91	14	5305-00-719-5021	486	11

CROSS REFERENCE INDEXES

NATIONAL STOCK NUMBER INDEX

STOCK NUMBER	FIGURE NO	ITEM NO	STOCK NUMBER	FIGURE NO	ITEM NO
5305-00-719-5221	390	2	5305-00-724-7263	196	16
5305-00-719-5235	437	12	5305-00-724-7264	196	12
5305-00-719-5238	397	16	5305-00-724-7264	196	16
5305-00-719-5239	397	8	5305-00-724-7265	196	1
5305-00-719-5239	437	12	5305-00-725-2317	36	16
5305-00-719-5240	191	14	5305-00-725-2317	205	20
5305-00-719-5241	397	17	5305-00-725-2317	245	23
5305-00-719-5241	397	20	5305-00-725-2317	270	9
5325-00-720-8064	245	4	5305-00-725-2317	270	13
5305-00-721-5665	482	14	5305-00-725-2317	270	30
5310-00-721-7809	35	12	5305-00-725-2317	272	34
5310-00-721-7809	398	12	5305-00-725-2317	273	3
5320-00-721-9062	197	22	5305-00-725-2317	274	26
5320-00-721-9062	199	46	5305-00-725-2317	275	22
5320-00-721-9062	212	17	5305-00-725-2317	277	12
5320-00-721-9062	288	9	5305-00-725-2317	286	34
5320-00-721-9062	289	20	5305-00-725-2317	33A	20
2520-00-722-7074	KITS	13	5305-00-725-2317	38A	4
5970-00-724-1907	BULK	40	5305-00-725-2317	463	21
5970-00-724-1910	91	6	5305-00-725-2317	490	1
5970-00-724-1910	BULK	37	5340-00-725-5280	75	38
5305-00-724-5812	333	20	5340-00-725-5280	77	20
5305-00-724-6783	368	9	5340-00-725-5280	177	12
5340-00-724-7038	59	9	5340-00-725-5280	178	25
5340-00-724-7038	83	18	6220-00-726-1916	63	1
5340-00-724-7038	84	3	5305-00-727-2283	437	8
5340-00-724-7038	88	21	5340-00-727-4774	394	1
5340-00-724-7038	91	9	4730-00-728-2393	6	10
5340-00-724-7038	95	44	5930-00-728-4328	55	19
5340-00-724-7038	410	21	5930-00-728-4328	56	16
5340-00-724-7038	414	18	5305-00-728-6274	213	26
5340-00-724-7038	416	21	5305-00-728-6274	214	21
5340-00-724-7038	428	20	6220-00-729-9295	63	2
5305-00-724-7219	140	8	5340-00-731-9611	480	7
5305-00-724-7219	147	8	5305-00-732-0511	103	18
5305-00-724-7220	140	10	5305-00-732-0511	363	21
5305-00-724-7220	147	11	5310-00-732-0558	44	4
5305-00-724-7220	157	21	5310-00-732-0558	62	8
5305-00-724-7220	158	14	5310-00-732-0558	75	42
5305-00-724-7228	194	8	5310-00-732-0558	77	1
5305-00-724-7247	185	3	5310-00-732-0558	89	9
5305-00-724-7248	186	4	5310-00-732-0558	401	11
5305-00-724-7248	457	18	5310-00-732-0558	490	15
5305-00-724-7254	186	3	5360-00-735-1126	128	57
5305-00-724-7254	196	12	5310-00-735-5396	191	26
5305-00-724-7254	470	8	5940-00-735-5520	41	10
5305-00-724-7263	196	1	5940-00-735-5520	44	13

CROSS REFERENCE INDEXES

NATIONAL STOCK NUMBER INDEX

STOCK NUMBER	FIGURE NO	ITEM NO	STOCK NUMBER	FIGURE NO	ITEM NO
5940-00-735-5520	44	19	5340-00-764-7051	396	12
5940-00-735-5520	44	24	5340-00-764-7051	468	11
5940-00-735-5520	69	36	5340-00-764-7052	77	11
5940-00-735-5520	72	16	5315-00-765-2190	279	19
5940-00-735-5520	73	25	6240-00-765-8443	47	2
5940-00-735-5520	474	11	5310-00-768-0318	69	1
5940-00-735-5520	480	26	5310-00-768-0318	363	20
5930-00-736-3539	39	29	5310-00-768-0319	35	19
5930-00-736-3539	59	19	5310-00-768-0319	43	49
5315-00-737-0134	403	9	5310-00-768-0319	62	27
5340-00-738-5182	457	8	5310-00-768-0319	487	11
4820-00-752-9040	29	9	5331-00-770-0242	387	15
5315-00-753-3895	202	22	5310-00-770-0243	387	16
5306-00-753-6996	403	13	5975-00-771-6634	85	17
2530-00-753-7285	169	21	5975-00-771-6634	86	10
5330-00-753-9072	67	5	5310-00-772-0442	36	6
5315-00-754-0848	153	21	5310-00-772-0442	38	6
5320-00-754-0992	198	5	5310-00-772-0442	43B	3
5320-00-754-0992	238	6	5365-00-772-2322	80	9
5325-00-754-1155	428	8	5365-00-772-2322	84	27
5310-00-755-7283	199	5	5365-00-772-2322	85	9
3110-00-756-2022	128	44	5365-00-772-2322	86	5
5305-00-757-8122	75	44	5935-00-772-2344	85	13
5305-00-757-8122	488	12	5935-00-772-2344	86	18
5305-00-757-8287	379	5	5935-00-772-2353	84	26
5310-00-761-0654	15	23	5935-00-772-2353	86	23
5310-00-761-0654	16	27	5935-00-772-3307	85	14
5310-00-761-0654	39	11	5935-00-772-3307	86	19
5310-00-761-0654	205	34	5935-00-773-1428	83	28
5310-00-761-0654	206	23	5935-00-773-1428	88	45
5310-00-761-0654	286	8	5310-00-774-9073	390	4
5310-00-761-3706	283	10	5310-00-774-9073	397	7
5310-00-761-3706	285	10	5310-00-774-9073	397	22
5310-00-761-6882	64	12	5310-00-775-5139	39	37
5310-00-761-6882	252	9	5305-00-777-2284	39	57
5310-00-761-6882	494	10	5305-00-781-3926	1	5
5310-00-761-6882	495	14	5305-00-781-3926	272	23
5305-00-763-7829	225	1	5305-00-781-3926	272	35
5310-00-763-8906	476	11	5305-00-781-3926	272	38
5310-00-763-8919	165	6	5305-00-781-3926	273	1
5310-00-763-8919	179	12	5305-00-781-3926	273	4
5340-00-764-7051	83	19	5305-00-781-3926	274	25
5340-00-764-7051	85	28	5305-00-781-3926	275	3
5340-00-764-7051	88	24	5305-00-781-3926	277	12
5340-00-764-7051	92	21	5305-00-781-3926	286	32
5340-00-764-7051	95	46	5305-00-781-3927	277	31
5340-00-764-7051	335	4	5305-00-781-3927	288	10

CROSS REFERENCE INDEXES

NATIONAL STOCK NUMBER INDEX

STOCK NUMBER	FIGURE NO	ITEM NO	STOCK NUMBER	FIGURE NO	ITEM NO
5305-00-781-3927	33A	19	4730-00-808-5090	312	9
5305-00-781-3928	274	12	5340-00-809-1490	75	23
5305-00-781-3928	274	23	5340-00-809-1490	88	37
5305-00-781-3928	277	31	5340-00-809-1490	400	11
5305-00-781-3928	288	6	5340-00-809-1492	77	4
5305-00-781-3930	170	21	5340-00-809-1492	83	5
5305-00-781-3930	275	14	5340-00-809-1492	84	29
5305-00-782-9489	23	1	5340-00-809-1492	88	13
5305-00-782-9489	23	14	5340-00-809-1492	96	22
5305-00-782-9489	24	13	5340-00-809-1492	125	12
5305-00-782-9489	24	22	5340-00-809-1492	315	10
5305-00-782-9489	202	35	5340-00-809-1492	444	7
5305-00-782-9489	272	38	5340-00-809-1492	478	2
5305-00-782-9489	273	4	5340-00-809-1494	44	17
5305-00-782-9489	274	13	5340-00-809-1494	64	27
5305-00-782-9489	398	22	5340-00-809-1494	75	29
5305-00-782-9489	410	4	5340-00-809-1494	84	11
5305-00-782-9489	412	4	5340-00-809-1494	88	19
5305-00-782-9489	428	3	5340-00-809-1494	338	29
5305-00-782-9489	490	3	5340-00-809-1494	339	25
4910-00-785-6437	505	15	5340-00-809-1494	480	22
5310-00-789-0398	349	15	5340-00-809-1500	75	50
4730-00-789-0951	177	3	5340-00-809-1500	77	22
4730-00-789-0951	178	1	5310-00-809-3078	4	31
5945-00-789-3706	49	8	5310-00-809-3078	71	11
5935-00-790-4614	56	11	5310-00-809-3078	180	20
5320-00-801-1548	348	11	5310-00-809-3078	203	2
2590-00-801-2355	51	8	5310-00-809-3078	206	3
5310-00-802-4701	482	10	5310-00-809-3078	233	2
4730-00-803-6266	334	11	5310-00-809-3078	243	16
5325-00-803-7305	99	25	5310-00-809-3078	247	6
5325-00-803-7305	133	7	5310-00-809-3078	248	19
5935-00-806-4183	93	11	5310-00-809-3078	266	15
5310-00-807-1466	273	14	5310-00-809-3078	375	21
5310-00-807-1466	275	13	5310-00-809-3078	430	35
5310-00-807-1466	276	9	5310-00-809-3078	446	13
5310-00-807-1475	279	14	5310-00-809-3079	455	5
5310-00-807-1476	279	18	5310-00-809-4058	12	1
5310-00-807-1477	279	26	5310-00-809-4058	16	22
5935-00-807-4109	62	22	5310-00-809-4058	19	4
5935-00-807-4109	366	31	5310-00-809-4058	21	18
5935-00-807-4109	386	9	5310-00-809-4058	42	7
5935-00-807-4109	469	10	5310-00-809-4058	50	14
5935-00-807-4109	483	1	5310-00-809-4058	51	2
4240-00-807-6856	311	7	5310-00-809-4058	62	28
4240-00-807-6856	312	3	5310-00-809-4058	64	14
4730-00-808-5090	311	13	5310-00-809-4058	64	21

CROSS REFERENCE INDEXES

NATIONAL STOCK NUMBER INDEX

STOCK NUMBER	FIGURE NO	ITEM NO	STOCK NUMBER	FIGURE NO	ITEM NO
5310-00-809-4058	69	4	5310-00-809-4058	326	11
5310-00-809-4058	70	11	5310-00-809-4058	327	44
5310-00-809-4058	80	16	5310-00-809-4058	328	14
5310-00-809-4058	84	19	5310-00-809-4058	331	26
5310-00-809-4058	84	21	5310-00-809-4058	343	16
5310-00-809-4058	141	15	5310-00-809-4058	365	16
5310-00-809-4058	155	5	5310-00-809-4058	365	25
5310-00-809-4058	169	11	5310-00-809-4058	366	16
5310-00-809-4058	177	11	5310-00-809-4058	368	22
5310-00-809-4058	178	6	5310-00-809-4058	375	29
5310-00-809-4058	197	29	5310-00-809-4058	379	14
5310-00-809-4058	198	8	5310-00-809-4058	382	5
5310-00-809-4058	198	14	5310-00-809-4058	384	8
5310-00-809-4058	203	12	5310-00-809-4058	388	9
5310-00-809-4058	204	12	5310-00-809-4058	389	9
5310-00-809-4058	206	25	5310-00-809-4058	397	9
5310-00-809-4058	207	7	5310-00-809-4058	402	2
5310-00-809-4058	211	27	5310-00-809-4058	429	12
5310-00-809-4058	212	26	5310-00-809-4058	430	15
5310-00-809-4058	214	5	5310-00-809-4058	475	8
5310-00-809-4058	225	42	5310-00-809-4058	481	8
5310-00-809-4058	227	30	5310-00-809-4058	492	8
5310-00-809-4058	238	19	5310-00-809-4058	497	4
5310-00-809-4058	241	13	5310-00-809-4061	1	3
5310-00-809-4058	243	7	5310-00-809-4061	8	1
5310-00-809-4058	246	23	5310-00-809-4061	37	11
5310-00-809-4058	248	26	5310-00-809-4061	170	22
5310-00-809-4058	249	1	5310-00-809-4085	35	23
5310-00-809-4058	250	13	5310-00-809-4085	36	2
5310-00-809-4058	250	18	5310-00-809-4085	38	2
5310-00-809-4058	267	2	5310-00-809-4085	136	4
5310-00-809-4058	267	4	5310-00-809-4085	144	15
5310-00-809-4058	269	31	5310-00-809-4085	152	15
5310-00-809-4058	272	3	5310-00-809-4085	169	15
5310-00-809-4058	280	49	5310-00-809-4085	171	2
5310-00-809-4058	281	49	5310-00-809-4085	202	33
5310-00-809-4058	287	24	5310-00-809-4085	234	9
5310-00-809-4058	288	21	5310-00-809-4085	239	6
5310-00-809-4058	288	29	5310-00-809-4085	271	10
5310-00-809-4058	292	10	5310-00-809-4085	271	25
5310-00-809-4058	293	30	5310-00-809-4085	313	22
5310-00-809-4058	294	5	5310-00-809-4085	398	4
5310-00-809-4058	304	8	5310-00-809-4085	402	9
5310-00-809-4058	312	2	5310-00-809-4085	438	19
5310-00-809-4058	321	12	5310-00-809-4085	456	16
5310-00-809-4058	323	8	5310-00-809-4085	472	11
5310-00-809-4058	325	14	5310-00-809-4085	475	11

CROSS REFERENCE INDEXES

NATIONAL STOCK NUMBER INDEX

STOCK NUMBER	FIGURE NO	ITEM NO	STOCK NUMBER	FIGURE NO	ITEM NO
5310-00-809-5997	209	13	5310-00-814-0673	212	16
5310-00-809-5997	292	19	5310-00-814-0673	226	12
5310-00-809-5997	429	37	5310-00-814-0673	230	16
5310-00-809-5998	33	2	5310-00-814-0673	242	5
5310-00-809-5998	142	17	5310-00-814-0673	250	23
5310-00-809-5998	143	17	5310-00-814-0673	266	1
5310-00-809-5998	150	17	5310-00-814-0673	268	10
5310-00-809-5998	151	17	5310-00-814-0673	268	29
5310-00-809-5998	165	9	5310-00-814-0673	269	16
5310-00-809-5998	166	6	5310-00-814-0673	284	12
5310-00-809-5998	293	9	5310-00-814-0673	288	20
5310-00-809-5998	295	7	5310-00-814-0673	292	15
5310-00-809-5998	295	13	5310-00-814-0673	328	6
5310-00-809-5998	363	17	5310-00-814-0673	328	15
5310-00-809-5998	390	3	5310-00-814-0673	329	9
5310-00-809-5998	397	15	5310-00-814-0673	333	21
5310-00-809-5998	455	3	5310-00-814-0673	338	27
5310-00-809-8533	178	22	5310-00-814-0673	339	22
5310-00-809-8533	385	10	5310-00-814-0673	364	7
5310-00-809-8546	46	10	5310-00-814-0673	375	31
5310-00-809-8546	446	8	5310-00-814-0673	390	5
5310-00-809-8546	447	9	5310-00-814-0673	401	9
5310-00-809-8546	449	3	5310-00-814-0673	409	4
5310-00-811-0966	291	4	5310-00-814-0673	411	4
5310-00-811-0966	297	4	5310-00-814-0673	413	6
5310-00-811-3494	252	4	5310-00-814-0673	414	11
5310-00-811-3494	379	3	5310-00-814-0673	415	14
5305-00-813-2785	375	10	5310-00-814-0673	416	14
5305-00-813-2785	375	25	5310-00-814-0673	417	11
5310-00-814-0672	144	4	5310-00-814-0673	418	8
5310-00-814-0672	152	4	5310-00-814-0673	419	9
5310-00-814-0672	272	24	5310-00-814-0673	420	4
5310-00-814-0673	74	8	5310-00-814-0673	423	4
5310-00-814-0673	83	25	5310-00-814-0673	428	14
5310-00-814-0673	144	4	5310-00-814-0673	429	18
5310-00-814-0673	152	4	5310-00-814-0673	440	11
5310-00-814-0673	153	25	5310-00-814-0673	445	2
5310-00-814-0673	154	6	5310-00-814-0673	463	12
5310-00-814-0673	169	33	5310-00-814-0673	468	7
5310-00-814-0673	189	6	5310-00-814-0673	480	4
5310-00-814-0673	190	1	5315-00-814-3529	230	11
5310-00-814-0673	205	1	5315-00-815-8840	153	4
5310-00-814-0673	206	10	5315-00-815-8840	155	17
5310-00-814-0673	206	13	5315-00-816-1794	165	7
5310-00-814-0673	208	29	5315-00-816-1794	166	7
5310-00-814-0673	209	8	4730-00-816-2787	327	23
5310-00-814-0673	211	19	5310-00-817-4623	261	14

CROSS REFERENCE INDEXES

NATIONAL STOCK NUMBER INDEX

STOCK NUMBER	FIGURE NO	ITEM NO	STOCK NUMBER	FIGURE NO	ITEM NO
5310-00-820-6653	193	6	5340-00-833-8476	410	18
5305-00-821-3869	23	23	5340-00-833-8476	412	15
5305-00-821-3869	24	27	5935-00-833-8561	86	25
5305-00-821-3869	251	26	5935-00-833-8561	366	33
5305-00-821-3869	251	44	5935-00-833-8561	386	12
5305-00-821-3869	272	27	5935-00-833-8561	472	7
5305-00-821-3869	285	4	5935-00-833-8561	475	2
5305-00-821-3869	414	2	5935-00-833-8561	479	5
5305-00-821-3869	462	11	5935-00-833-8561	483	8
5305-00-821-3869	470	15	5970-00-833-8562	75	13
5305-00-821-3869	471	6	5970-00-833-8562	76	11
5305-00-821-3869	486	8	5310-00-834-7606	438	13
5325-00-823-5999	198	2	5310-00-834-8732	44	6
5325-00-823-5999	199	11	5310-00-838-2024	283	15
5325-00-823-5999	225	23	5315-00-839-2325	21	19
5325-00-823-5999	239	9	5315-00-839-2325	21	29
5325-00-823-5999	317	7	5315-00-839-2325	238	18
5325-00-823-5999	318	11	5315-00-839-2325	250	10
5325-00-823-5999	321	8	5315-00-839-2326	274	5
5325-00-823-5999	325	19	5315-00-839-2326	276	31
5325-00-823-5999	373	6	5315-00-839-5820	202	18
5325-00-823-5999	376	7	5315-00-839-5820	243	9
5325-00-823-5999	376	11	5315-00-839-5820	293	10
5310-00-823-8803	193	5	5315-00-839-5821	134	1
5310-00-823-8803	199	41	5315-00-839-5822	443	17
5310-00-823-8803	437	4	2540-00-840-0022	328	12
5310-00-823-8804	5	6	5310-00-840-6222	169	14
5310-00-823-8804	15	21	5315-00-840-9653	243	11
5310-00-823-8804	18	3	5305-00-841-2044	72	14
5310-00-823-8804	21	2	5315-00-842-3044	97	6
5310-00-823-8804	21	28	5315-00-842-3044	99	18
5310-00-823-8804	253	2	5315-00-842-3044	101	1
5310-00-823-8804	494	4	5315-00-842-3044	133	9
5310-00-823-8804	495	12	5315-00-842-3044	153	13
5310-00-823-8804	496	7	5315-00-842-3044	155	19
5310-00-823-8804	66A	4	5315-00-842-3044	202	39
5305-00-824-2004	382	13	5315-00-842-3044	205	21
5970-00-827-6566	44	14	5315-00-842-3044	243	23
5970-00-827-6566	313	14	5315-00-842-3044	244	9
5315-00-828-5487	4	13	5315-00-842-3044	390	14
5315-00-829-1480	368	8	5340-00-843-7825	65	20
5330-00-830-1745	9	4	5340-00-843-7825	88	30
5325-00-832-5650	62	16	5340-00-843-7825	89	14
5305-00-832-5743	62	15	5340-00-843-7825	95	28
5310-00-832-6852	46	14	5340-00-843-7825	96	20
5340-00-833-8476	66	5	5340-00-843-7825	327	28
5340-00-833-8476	79	21	5330-00-843-9235	172	12

CROSS REFERENCE INDEXES

NATIONAL STOCK NUMBER INDEX

STOCK NUMBER	FIGURE NO	ITEM NO	STOCK NUMBER	FIGURE NO	ITEM NO
5306-00-844-0036	438	5	5305-00-857-6886	274	10
5306-00-844-0036	444	5	5305-00-857-6886	276	12
5305-00-844-1507	445	13	5305-00-857-6886	277	1
5315-00-846-0126	191	10	5320-00-864-6203	199	48
5315-00-846-0126	442	13	5320-00-865-8994	498	15
5315-00-846-0126	453	15	4730-00-871-6729	10	8
5935-00-846-3884	83	35	5310-00-877-5796	328	13
5935-00-846-3884	86	37	5310-00-877-5797	368	36
5305-00-846-5703	268	17	5310-00-877-5797	379	49
5305-00-846-5703	272	27	5310-00-877-5797	388	3
5305-00-846-5703	274	12	5310-00-877-5797	393	15
5305-00-846-5703	277	48	5310-00-877-5797	396	11
2920-00-848-3292	380	15	5310-00-877-5975	398	9
5330-00-848-4439	176	11	4730-00-877-6298	178	9
2530-00-848-4581	167	12	4730-00-877-6298	436	5
5310-00-849-6882	191	11	4730-00-877-6298	477	4
5320-00-850-3282	368	44	6220-00-880-1624	60	4
5310-00-850-6868	188	34	5120-00-880-4268	503	4
5310-00-850-6993	186	9	5310-00-880-7744	71	2
5310-00-850-6993	188	18	5310-00-880-7744	209	5
5310-00-850-7004	144	10	5310-00-880-7744	226	21
5310-00-850-7004	144	18	5310-00-880-7744	230	5
5310-00-850-7004	152	10	5310-00-880-7744	235	8
5310-00-850-7004	152	18	5310-00-880-7744	236	6
5310-00-850-7004	170	3	5310-00-880-7744	295	10
5310-00-850-7004	170	9	5310-00-880-7746	137	1
5310-00-850-7004	170	13	5310-00-880-9344	216	5
5310-00-850-7004	183	5	5310-00-880-9344	221	5
5310-00-850-7004	185	14	5340-00-881-5303	11	7
5310-00-850-7004	187	18	5310-00-883-2237	45	1
5310-00-850-7004	188	14	5325-00-886-1067	247	8
5310-00-850-7004	437	10	5310-00-889-2528	327	13
5310-00-852-8593	498	10	5310-00-889-2543	55	10
3110-00-854-1504	148	6	5305-00-889-3000	43	34
5340-00-854-6729	93	17	5305-00-889-3001	43	39
5340-00-854-6729	96	23	5305-00-889-3001	57	1
5340-00-854-6729	412	21	5305-00-889-3002	45	51
5340-00-854-6729	425	17	5310-00-889-8782	140	2
5340-00-854-6729	426	23	5310-00-889-8782	147	2
5340-00-854-6729	427	23	5315-00-890-3461	390	11
5340-00-854-6730	416	16	3110-00-892-0896	148	19
5340-00-854-6730	428	16	9905-00-893-3570	41	4
5305-00-855-0957	225	9	9905-00-893-3570	41	9
5305-00-855-0957	277	40	9905-00-893-3570	41	18
5305-00-855-0957	294	2	9905-00-893-3570	44	15
5310-00-855-1102	52	16	9905-00-893-3570	44	21
5930-00-856-1654	482	2	9905-00-893-3570	44	26

CROSS REFERENCE INDEXES

NATIONAL STOCK NUMBER INDEX

STOCK NUMBER	FIGURE NO	ITEM NO	STOCK NUMBER	FIGURE NO	ITEM NO
9905-00-893-3570	69	13	5975-00-903-2284	98	6
9905-00-893-3570	69	22	5975-00-903-2284	99	3
9905-00-893-3570	69	27	5975-00-903-2288	98	6
9905-00-893-3570	69	38	5310-00-905-0762	213	11
9905-00-893-3570	72	6	5310-00-905-0762	240	23
9905-00-893-3570	72	18	5310-00-905-0762	311	14
9905-00-893-3570	73	20	5310-00-905-0762	313	1
9905-00-893-3570	73	24	5310-00-905-0762	315	12
9905-00-893-3570	81	6	5310-00-905-0762	327	40
9905-00-893-3570	81	12	5310-00-905-0762	425	9
9905-00-893-3570	94	3	5310-00-905-0762	426	6
9905-00-893-3570	474	13	5310-00-905-0762	427	10
9905-00-893-3570	480	19	5310-00-905-0762	443	1
9905-00-893-3570	480	28	5310-00-905-0762	444	9
9905-00-893-3570	480	33	5310-00-905-0762	457	5
5925-00-894-8015	50	10	5340-00-905-0790	485	6
5310-00-896-0903	170	23	5310-00-905-4600	59	3
5310-00-896-0903	194	7	5310-00-905-4600	136	14
5310-00-896-0903	195	9	4730-00-908-3193	301	4
5310-00-896-0903	202	30	4730-00-908-3193	303	6
5310-00-896-0903	425	10	4730-00-908-3193	304	2
5310-00-896-0903	426	12	4730-00-908-3193	364	3
5310-00-896-0903	427	11	4730-00-908-3193	365	10
4730-00-897-5497	178	20	4730-00-908-3193	368	14
4730-00-897-5497	334	12	4730-00-908-3193	379	39
4730-00-897-5497	366	10	4730-00-908-3193	496	15
4730-00-897-5497	385	11	4730-00-908-3194	268	32
5320-00-899-0981	213	29	4730-00-908-3194	310	7
5320-00-899-0981	214	19	4730-00-908-3194	379	9
5320-00-899-0981	270	16	4730-00-908-3194	176A	22
5320-00-899-0981	315	3	4730-00-908-6292	10	14
5320-00-899-0981	337	12	4730-00-908-6292	24	2
5975-00-899-4606	282	10	4730-00-908-6292	331	20
3030-00-899-4888	490	11	4730-00-908-6292	368	3
5305-00-900-2546	382	1	4730-00-908-6293	387	2
3110-00-900-2560	118	2	4730-00-908-6293	393	16
3110-00-900-2560	120	11	4730-00-908-6294	27	1
4730-00-900-3296	178	23	4730-00-908-6294	337	26
5935-00-900-6281	366	32	4730-00-908-6294	343	3
5935-00-900-6281	386	11	4730-00-908-6294	368	20
5935-00-900-6281	469	11	4730-00-908-6294	387	5
5935-00-900-6281	483	3	2920-00-909-2483	35	6
5305-00-901-2099	394	5	4730-00-909-8627	17	16
5305-00-901-2134	385	13	4730-00-909-8627	29	8
9905-00-901-2942	357	7	4730-00-909-8627	379	34
5305-00-901-7250	390	7	5306-00-911-5005	433	1
5305-00-902-6643	383	2	4730-00-911-5707	6	1

CROSS REFERENCE INDEXES

NATIONAL STOCK NUMBER INDEX

STOCK NUMBER	FIGURE NO	ITEM NO	STOCK NUMBER	FIGURE NO	ITEM NO
4730-00-911-5707	177	3	5310-00-933-4310	435	3
5310-00-913-5474	70	8	5310-00-933-8118	282	15
5310-00-913-5474	481	5	5310-00-933-8119	482	18
5305-00-915-8087	2	14	5310-00-934-9747	333	28
5305-00-915-8087	156	22	5310-00-934-9748	282	16
4030-00-916-2141	191	20	5310-00-934-9751	45	49
5310-00-922-2017	64	15	5310-00-934-9751	327	34
5310-00-922-2017	64	25	5310-00-934-9751	333	18
5310-00-922-2017	67	3	5310-00-934-9751	482	22
5310-00-922-2017	88	42	5310-00-934-9754	380	1
5310-00-922-2017	225	49	5310-00-934-9757	48	1
5310-00-922-2017	226	29	5310-00-934-9758	64	16
5310-00-922-2017	370	17	5310-00-934-9758	64	26
5310-00-922-2017	465	3	5310-00-934-9758	74	9
5310-00-922-2017	487	3	5310-00-934-9758	88	43
5340-00-922-6300	58	11	5310-00-934-9758	208	28
5340-00-922-6300	59	11	5310-00-934-9758	213	14
5340-00-922-6300	84	2	5310-00-934-9758	214	10
5340-00-922-6300	88	22	5310-00-934-9758	240	1
5340-00-922-6300	93	22	5310-00-934-9758	240	13
5340-00-922-6300	95	31	5310-00-934-9758	240	20
5340-00-922-6300	96	28	5310-00-934-9758	241	7
5340-00-922-6300	306	9	5310-00-934-9758	269	2
5340-00-922-6300	310	4	5310-00-934-9758	283	30
5340-00-922-6300	338	28	5310-00-934-9758	327	30
5340-00-922-6300	379	2	5310-00-934-9758	335	14
5340-00-922-6300	410	20	5310-00-934-9758	336	11
5340-00-922-6300	414	19	5310-00-934-9758	442	8
5340-00-922-6300	416	19	5310-00-934-9764	63	5
5340-00-922-6300	428	18	5310-00-934-9764	85	6
5340-00-926-5449	313	20	5310-00-934-9764	169	19
5325-00-928-6214	65	7	5310-00-934-9764	246	33
1640-00-929-0041	BULK	50	5310-00-934-9764	293	15
5340-00-929-1794	477	7	5310-00-935-9021	2	15
5310-00-930-8214	167	6	5310-00-935-9021	23	4
5310-00-930-8214	245	27	5310-00-935-9021	24	10
2910-00-930-9367	366	25	5310-00-935-9021	26	6
2910-00-930-9367	384	6	5310-00-935-9021	52	23
5310-00-931-8167	203	21	5310-00-935-9021	103	17
5310-00-931-8167	204	9	5310-00-935-9021	144	14
5310-00-931-8167	473	6	5310-00-935-9021	152	14
5310-00-931-8167	474	9	5310-00-935-9021	159	4
2510-00-933-2893	266	7	5310-00-935-9021	160	9
2510-00-933-2895	266	7	5310-00-935-9021	164	4
5310-00-933-4310	282	7	5310-00-935-9021	169	1
5310-00-933-4310	403	3	5310-00-935-9021	187	10
5310-00-933-4310	433	2	5310-00-935-9021	189	2

CROSS REFERENCE INDEXES

NATIONAL STOCK NUMBER INDEX

STOCK NUMBER	FIGURE NO	ITEM NO	STOCK NUMBER	FIGURE NO	ITEM NO
5310-00-935-9021	190	3	5310-00-935-9022	368	18
5310-00-935-9021	205	9	5310-00-935-9022	379	22
5310-00-935-9021	210	14	5310-00-935-9022	380	14
5310-00-935-9021	245	30	5310-00-935-9022	388	10
5310-00-935-9021	251	45	5310-00-935-9022	393	12
5310-00-935-9021	266	24	5310-00-935-9022	411	19
5310-00-935-9021	268	19	5310-00-935-9022	484	12
5310-00-935-9021	270	19	5310-00-935-9022	485	17
5310-00-935-9021	270	21	5331-00-935-9136	3	3
5310-00-935-9021	272	29	5331-00-935-9136	400	2
5310-00-935-9021	273	22	5331-00-935-9136	479	3
5310-00-935-9021	274	17	2010-00-937-5599	122	26
5310-00-935-9021	275	19	5310-00-941-6019	250	14
5310-00-935-9021	276	19	5310-00-941-6019	378	10
5310-00-935-9021	277	4	5310-00-941-6019	378	13
5310-00-935-9021	278	12	5310-00-941-6019	389	1
5310-00-935-9021	283	8	5305-00-942-2196	456	22
5310-00-935-9021	285	9	9905-00-945-7637	86	2
5310-00-935-9021	286	28	9905-00-945-7637	94	4
5310-00-935-9021	288	13	9905-00-945-7637	480	14
5310-00-935-9021	292	16	5305-00-947-4355	183	17
5310-00-935-9021	293	6	5305-00-947-4358	181	10
5310-00-935-9021	369	10	5305-00-947-4358	182	6
5310-00-935-9021	372	6	5305-00-947-4358	188	39
5310-00-935-9021	398	25	5305-00-947-4359	183	8
5310-00-935-9021	409	8	5305-00-947-4360	183	16
5310-00-935-9021	410	9	5305-00-947-4360	184	13
5310-00-935-9021	411	14	5305-00-947-4361	144	1
5310-00-935-9021	412	7	5305-00-947-4361	152	1
5310-00-935-9021	414	9	5305-00-947-4361	195	2
5310-00-935-9021	415	13	5305-00-947-4362	144	22
5310-00-935-9021	416	10	5305-00-947-4363	471	4
5310-00-935-9021	425	16	4030-00-948-7315	293	25
5310-00-935-9021	426	20	4730-00-949-8694	335	5
5310-00-935-9021	427	20	4730-00-949-8694	336	3
5310-00-935-9021	428	10	5310-00-950-1310	274	21
5310-00-935-9021	431	7	5310-00-952-3567	374	12
5310-00-935-9021	440	17	4730-00-954-1251	18	5
5310-00-935-9021	441	11	4730-00-954-1251	141	10
5310-00-935-9021	456	18	4730-00-954-1251	399	16
5310-00-935-9021	463	3	4730-00-954-1281	5	1
5310-00-935-9021	464	1	4730-00-954-1281	436	4
5310-00-935-9021	470	13	5305-00-954-3937	243	29
5310-00-935-9021	471	5	5340-00-954-6014	18	11
5310-00-935-9021	484	13	5340-00-954-6014	89	8
5310-00-935-9021	490	10	5340-00-954-6014	124	16
5310-00-935-9022	64	29	5340-00-954-6014	125	16

CROSS REFERENCE INDEXES

NATIONAL STOCK NUMBER INDEX

STOCK NUMBER	FIGURE NO	ITEM NO	STOCK NUMBER	FIGURE NO	ITEM NO
5340-00-954-6014	159	12	5310-00-984-3807	324	9
5340-00-954-6014	160	3	5310-00-984-3807	325	25
5340-00-954-6014	161	12	5310-00-984-3807	325	26
5320-00-957-2500	357	2	5305-00-984-4976	55	3
5320-00-957-2507	282	12	5305-00-984-4983	55	2
5305-00-957-2635	447	6	5305-00-984-4988	213	19
5310-00-957-2677	296	2	5305-00-984-4988	367	16
5305-00-958-4357	72	13	5305-00-984-4992	79	13
5305-00-958-5246	247	3	5305-00-984-5675	277	34
5305-00-958-5246	271	15	5305-00-984-5678	233	1
5305-00-958-5246	338	19	5305-00-984-6191	47	7
5305-00-958-5246	411	16	5305-00-984-6191	354	11
5305-00-958-5253	225	46	5305-00-984-6192	72	21
5305-00-958-5253	226	25	5305-00-984-6192	73	9
5305-00-958-5253	226	31	5305-00-984-6193	84	23
5305-00-958-5254	226	25	5305-00-984-6193	280	36
5305-00-958-5254	226	31	5305-00-984-6193	281	36
5305-00-958-5262	383	5	5305-00-984-6193	300	12
5305-00-958-5469	225	46	5305-00-984-6193	453	5
5305-00-958-5469	226	31	5305-00-984-6194	52	21
5305-00-958-5471	249	17	5305-00-984-6194	59	24
5340-00-958-8457	282	17	5305-00-984-6194	273	11
5340-00-958-8457	303	3	5305-00-984-6194	379	1
5340-00-958-8457	338	4	5305-00-984-6195	48	4
5340-00-958-8457	416	22	5305-00-984-6195	275	7
5340-00-958-8457	428	21	5305-00-984-6195	276	5
5305-00-959-2704	382	8	5305-00-984-6195	282	14
5340-00-960-9340	172	22	5305-00-984-6195	337	6
2530-00-960-9363	172	13	5305-00-984-6195	343	10
5340-00-964-5267	75	45	5305-00-984-6195	378	9
5340-00-964-5267	77	19	5305-00-984-6195	378	25
5340-00-964-5267	487D	4	5305-00-984-6195	380	3
5310-00-964-7092	215	4	5305-00-984-6196	280	10
6240-00-966-3831	62	17	5305-00-984-6196	281	10
5315-00-973-8637	245	11	5305-00-984-6197	50	9
9905-00-977-2727	330	4	5305-00-984-6199	213	33
5930-00-978-8805	55	17	5305-00-984-6199	214	26
5930-00-978-8805	56	12	5305-00-984-6210	213	20
5310-00-982-4908	128	55	5305-00-984-6210	214	17
5310-00-982-4908	129	22	5305-00-984-6210	299	1
5310-00-982-4939	313	23	5305-00-984-6210	430	7
5940-00-983-4067	79	7	5305-00-984-6211	63	7
5940-00-983-4067	485	1	5305-00-984-6212	35	13
5940-00-983-6105	52	17	5305-00-984-6212	88	41
5315-00-983-7402	268	8	5305-00-984-6212	202	3
5331-00-984-3750	314	35	5305-00-984-6212	284	13
5310-00-984-3807	199	9	5305-00-984-6212	293	11

CROSS REFERENCE INDEXES

NATIONAL STOCK NUMBER INDEX

STOCK NUMBER	FIGURE NO	ITEM NO	STOCK NUMBER	FIGURE NO	ITEM NO
5305-00-984-6212	439	6	5975-00-985-6630	336	12
5305-00-984-6213	203	32	5975-00-985-6630	338	18
5305-00-984-6213	222	12	5975-00-985-6630	436	3
5305-00-984-6213	347	2	5975-00-985-6630	457	15
5305-00-984-6214	272	19	5975-00-985-6630	483	2
5305-00-984-6214	281	16	5975-00-985-6630	484	1
5975-00-984-6582	64	28	5340-00-988-1162	80	14
5975-00-984-6582	81	11	5305-00-988-1170	267	17
5975-00-984-6582	160	2	5305-00-988-1171	237	12
5975-00-984-6582	469	2	5305-00-988-1724	97	2
5975-00-984-6582	470	7	5305-00-988-1724	237	7
5975-00-984-6582	487B	2	5305-00-988-1724	330	3
5310-00-984-7042	73	3	5305-00-988-1725	49	7
5310-00-984-7042	482	9	5305-00-988-1725	51	1
5305-00-984-7341	377	5	5305-00-988-1725	59	25
5305-00-984-7341	447	7	5305-00-988-1725	75	37
5305-00-984-7341	448	10	5305-00-988-1725	83	29
5305-00-984-7341	449	7	5305-00-988-1725	84	18
5305-00-984-7341	450	4	5305-00-988-1725	88	31
5305-00-984-7342	251	17	5305-00-988-1725	88	36
5305-00-984-7342	251	42	5305-00-988-1725	213	6
5305-00-984-7342	252	20	5305-00-988-1725	214	2
5305-00-984-7342	446	19	5305-00-988-1725	267	1
5305-00-984-7342	448	1	5305-00-988-1725	280	14
5305-00-984-7343	323	14	5305-00-988-1725	281	14
5305-00-984-7343	429	15	5305-00-988-1725	313	5
5305-00-984-7343	449	1	5305-00-988-1725	316	15
5305-00-984-7352	446	6	5305-00-988-1725	320	14
5305-00-984-7363	412	23	5305-00-988-1725	320	26
5340-00-984-8540	19	13	5305-00-988-1725	321	28
5340-00-984-8540	88	11	5305-00-988-1725	378	20
5340-00-984-8540	89	10	5305-00-988-1727	198	18
5340-00-984-8540	96	26	5305-00-988-1727	213	8
5340-00-984-8540	338	15	5305-00-988-1727	254	21
5340-00-984-8540	339	24	5305-00-988-1727	376	17
5340-00-984-8540	414	23	5340-00-988-3186	365	21
5340-00-984-8541	44	11	5305-00-988-7614	315	9
4730-00-985-4804	505	16	5305-00-988-9106	248	10
5975-00-985-6630	75	21	5315-00-989-0534	244	11
5975-00-985-6630	83	38	5305-00-989-0830	292	8
5975-00-985-6630	85	31	5305-00-989-0830	293	19
5975-00-985-6630	89	12	5305-00-989-0830	440	12
5975-00-985-6630	94	10	5340-00-989-1771	77	3
5975-00-985-6630	95	27	5340-00-989-1771	141	12
5975-00-985-6630	96	32	5340-00-989-1771	338	13
5975-00-985-6630	178	21	5340-00-989-1771	484	2
5975-00-985-6630	335	15	5340-00-989-1771	487B	5

CROSS REFERENCE INDEXES

NATIONAL STOCK NUMBER INDEX

STOCK NUMBER	FIGURE NO	ITEM NO	STOCK NUMBER	FIGURE NO	ITEM NO
5340-00-989-1771	487D	2	5305-00-992-6143	178	16
5305-00-989-6265	39	32	5305-00-992-6143	436	11
5305-00-989-6265	393	11	5305-00-993-0190	43	37
5305-00-989-7434	45	43	5305-00-993-0190	297	7
5305-00-989-7434	52	29	5305-00-993-1848	52	3
5305-00-989-7434	54	6	5305-00-993-1848	54	11
5305-00-989-7434	55	20	5305-00-993-1848	55	22
5305-00-989-7434	56	7	5305-00-993-1848	59	18
5305-00-989-7434	59	23	5305-00-993-1848	79	24
5305-00-989-7434	282	2	5305-00-993-1848	96	19
5305-00-989-7434	317	5	5305-00-993-1848	246	2
5305-00-989-7434	338	10	5305-00-993-1848	251	31
5305-00-989-7434	396	3	5305-00-993-1848	252	34
5305-00-989-7434	398	15	5305-00-993-1848	255	33
5305-00-989-7434	416	28	5305-00-993-1848	325	9
5305-00-989-7435	52	28	5305-00-993-1848	446	20
5305-00-989-7435	95	25	5305-00-993-1848	448	4
5305-00-989-7435	207	10	5305-00-993-1851	65	23
5305-00-989-7435	255	6	5305-00-993-1851	260	6
5305-00-989-7435	258	5	5305-00-993-1851	289	27
5305-00-989-7435	260	8	5305-00-993-2457	376	20
5305-00-989-7435	337	19	5305-00-993-2457	382	4
5305-00-989-7435	338	9	5305-00-993-2457	389	7
5305-00-989-7435	379	53	5305-00-993-2460	391	1
5305-00-989-7435	447	3	5305-00-993-2460	397	1
5305-00-989-7435	449	6	5305-00-993-2738	397	2
5340-00-989-9222	83	9	6620-00-993-5546	66	10
5340-00-989-9222	84	9	5340-00-993-6207	77	14
5340-00-989-9222	88	20	5340-00-993-6207	89	15
5340-00-989-9222	95	33	5340-00-993-6207	334	15
5340-00-989-9222	282	5	5340-00-993-6207	366	20
5340-00-989-9222	385	2	5340-00-993-6207	368	42
5340-00-989-9222	414	15	5340-00-993-6207	379	46
5340-00-989-9222	445	5	5340-00-993-6207	386	6
5310-00-990-1361	487	5	5305-00-995-3440	46	18
5310-00-990-1361	487	6	5305-00-995-3442	446	3
5305-00-990-6444	43	36	5305-00-995-3444	58	7
5305-00-990-6444	45	30	5305-00-995-3444	63	7
5305-00-990-6444	45	47	5305-00-995-3444	247	10
5305-00-990-6444	52	27	5305-00-995-3444	256	2
5305-00-990-6444	396	6	5305-00-995-3444	257	3
5305-00-990-6444	485	26	5305-00-995-3444	260	14
5340-00-990-7610	332	24	5305-00-995-3444	262	9
5305-00-990-8632	273	1	5305-00-995-3444	263	9
5305-00-990-8632	274	25	5305-00-995-3444	291	2
5305-00-990-8632	276	22	5305-00-995-3444	297	6
5305-00-990-8632	277	31	5310-00-995-4130	72	8

CROSS REFERENCE INDEXES

NATIONAL STOCK NUMBER INDEX

STOCK NUMBER	FIGURE NO	ITEM NO	STOCK NUMBER	FIGURE NO	ITEM NO
5305-00-995-6311	368	27	9905-01-013-8723	96	3
5310-00-997-1888	88	39	4720-01-014-4915	BULK	62
5310-00-997-1888	324	28	5305-01-016-4344	453	18
5310-00-997-1888	375	19	5305-01-016-5469	71	12
5310-00-997-1888	375	27	5310-01-016-9348	283	22
5310-00-997-1888	378	27	5340-01-017-4630	13	3
6220-00-998-6142	62	19	5340-01-017-4630	14	3
4730-01-003-5105	123	4	9905-01-017-4748	348	10
4730-01-003-5105	141	23	5310-01-018-5332	324	16
4730-01-003-5105	149	12	5320-01-019-5694	355	3
4730-01-003-5105	313	8	5320-01-019-5694	370	21
4730-01-003-5105	399	6	5320-01-019-5694	371	2
4730-01-003-5105	443	10	5310-01-021-9027	167	10
4730-01-003-5105	457	2	5320-01-023-2529	28	4
4720-01-003-6706	BULK	20	5320-01-023-2529	65	18
4730-01-004-8346	141	20	5320-01-023-2529	198	1
4820-01-005-2994	363	3	5320-01-023-2529	199	10
5305-01-005-6715	243	27	5320-01-023-2529	225	22
5305-01-006-2052	252	37	5320-01-023-2529	229	2
5305-01-006-2053	208	25	5320-01-023-2529	316	8
5305-01-006-2053	279	29	5320-01-023-2529	318	10
5305-01-006-2053	429	11	5320-01-023-2529	320	6
5305-01-006-5736	74	5	5320-01-023-2529	320	29
5305-01-006-5736	303	11	5320-01-023-2529	324	15
2540-01-008-1501	348	26	5320-01-023-2529	324	37
5310-01-009-9785	337	13	5320-01-023-2529	325	30
5310-01-012-8962	24	9	5320-01-023-2529	370	11
5310-01-012-8962	393	4	2540-01-023-5116	191	12
5310-01-012-8962	395	21	2520-01-024-1273	12	31
9905-01-013-8723	65	6	5330-01-025-4212	121	22
9905-01-013-8723	65	14	5310-01-025-6444	383	8
9905-01-013-8723	75	3	5120-01-026-1666	511	9
9905-01-013-8723	76	3	4240-01-026-3112	307	1
9905-01-013-8723	79	8	4240-01-026-3112	308	7
9905-01-013-8723	80	3	5340-01-026-3250	203	10
9905-01-013-8723	81	4	5340-01-026-3250	378	12
9905-01-013-8723	81	10	3110-01-027-4475	142	9
9905-01-013-8723	81	16	3110-01-027-4475	143	9
9905-01-013-8723	83	2	3110-01-027-4475	150	9
9905-01-013-8723	84	30	3110-01-027-4475	151	9
9905-01-013-8723	85	2	5310-01-027-9392	KITS	101
9905-01-013-8723	89	3	5320-01-029-8205	239	8
9905-01-013-8723	90	3	5790-01-031-0736	BULK	39
9905-01-013-8723	91	4	5305-01-032-4165	40	16
9905-01-013-8723	92	5	5305-01-032-4165	43B	5
9905-01-013-8723	93	7	5310-01-032-4169	40	47
9905-01-013-8723	95	3	5325-01-032-4222	40	13

CROSS REFERENCE INDEXES

NATIONAL STOCK NUMBER INDEX

STOCK NUMBER	FIGURE NO	ITEM NO	STOCK NUMBER	FIGURE NO	ITEM NO
5310-01-032-4827	40	48	5330-01-043-5572	100	2
9905-01-032-7002	394	4	5330-01-043-5572	100	5
5355-01-032-7430	293	23	5330-01-044-0703	KITS	83
2530-01-033-1855	172	9	5130-01-044-7196	504	12
2530-01-033-4237	172	11	5320-01-044-7545	199	28
5320-01-033-8637	208	23	5130-01-045-3507	504	13
5320-01-033-8638	208	39	5310-01-046-0186	40	37
5320-01-033-8643	205	19	5310-01-046-5371	487	6
5320-01-033-9126	208	35	5310-01-046-5382	340	9
2530-01-034-1715	172	21	5325-01-047-3201	323	11
5320-01-034-1884	321	24	5325-01-047-3201	326	10
5320-01-034-1884	376	22	4730-01-048-7874	17	6
5325-01-034-2757	40	15	5970-01-048-9378	485	4
5975-01-034-5871	98	7	4730-01-048-9769	384	4
5975-01-034-5871	332	8	4730-01-049-1559	17	7
5975-01-034-5871	369	2	5340-01-049-9564	13	23
5975-01-034-5871	371	3	5340-01-049-9564	14	10
5975-01-034-5871	412	22	5970-01-049-9948	BULK	38
5975-01-034-5871	414	24	5895-01-050-2072	274	20
5975-01-034-5871	416	27	5310-01-050-6565	40	6
5975-01-034-5871	468	1	5310-01-050-6565	43B	39
5975-01-034-5871	470	4	5305-01-052-4438	280	7
5975-01-034-5871	472	6	5340-01-053-7128	224	2
5975-01-034-5871	473	7	5310-01-057-3098	351	3
5975-01-034-5871	474	1	4730-01-058-0900	149	11
5975-01-034-5871	475	3	5310-01-058-3353	382	10
5975-01-034-5871	479	4	5310-01-058-3353	390	9
5975-01-034-5871	480	1	5310-01-058-3353	392	11
5975-01-034-5871	492	14	4720-01-058-7213	443	11
5940-01-035-4212	79	9	4720-01-058-7213	BULK	61
5940-01-035-4212	485	2	5340-01-059-0114	72	9
5935-01-035-5139	367	9	5331-01-061-3000	467	9
5305-01-035-8766	74	14	5331-01-061-3000	493	7
5342-01-036-0649	237	3	5331-01-061-3000	494	12
5330-01-037-0663	62	9	5331-01-061-3000	496	16
3110-01-037-4661	40	14	5310-01-063-8522	351	2
5340-01-038-1493	74	16	4730-01-066-1278	6	9
5310-01-038-8500	172	1	5305-01-066-3431	350	12
5310-01-038-8501	172	10	5310-01-066-6759	19	18
5310-01-038-9579	375	11	5310-01-066-6759	233	4
5310-01-038-9579	375	14	5310-01-066-6759	237	6
5305-01-039-6633	44	28	5310-01-066-6759	248	14
3110-01-040-6541	172	7	5310-01-066-6759	249	12
5330-01-041-9721	BULK	5	5310-01-066-6759	249	34
4730-01-042-5266	505	17	5310-01-066-6759	252	9
5310-01-042-8391	40	50	5310-01-066-6759	266	16
5310-01-042-8391	43B	45	5310-01-066-6759	389	12

CROSS REFERENCE INDEXES

NATIONAL STOCK NUMBER INDEX

STOCK NUMBER	FIGURE NO	ITEM NO	STOCK NUMBER	FIGURE NO	ITEM NO
5306-01-068-4592	409	5	5320-01-084-9235	224	15
5306-01-068-4592	411	11	5320-01-084-9235	287	3
5306-01-068-4592	415	10	5920-01-085-0825	52	13
3010-01-068-6996	45	12	5920-01-085-0825	59	14
2920-01-068-7182	KITS	103	5365-01-085-0910	121	3
2530-01-069-0906	45	27	5310-01-085-1208	377	11
5310-01-069-5243	74	4	5320-01-085-1755	211	23
5310-01-069-5243	282	16	9320-01-085-2889	494	21
5310-01-069-5243	435	5	5320-01-085-9995	197	19
5310-01-069-5243	453	7	5320-01-085-9995	199	20
4730-01-070-7680	12	40	5320-01-085-9995	287	28
4730-01-070-7680	149	6	5320-01-085-9995	293	32
4730-01-070-7680	399	3	5320-01-086-1143	197	10
5340-01-071-2047	18	12	5320-01-086-1143	199	16
5340-01-071-2047	124	12	5320-01-086-1144	223	5
1640-01-072-1167	433	5	5320-01-086-1147	287	16
4730-01-074-0060	327	24	5320-01-086-1148	219	3
5320-01-075-0367	197	20	5320-01-086-1148	287	13
5305-01-075-0957	243	20	5320-01-086-1148	290	3
5305-01-075-0957	308	4	5330-01-086-5457	KITS	21A
5306-01-075-8519	209	12	5305-01-087-4478	5	9
5306-01-075-8519	430	12	5340-01-087-4612	230	23
5305-01-076-3150	50	5	5340-01-087-4612	231	28
5330-01-076-6172	62	10	5340-01-087-4612	235	19
5305-01-076-6308	43	45	5310-01-088-2490	340	2
5310-01-078-5996	261	1	5325-01-088-7468	327	17
5120-01-079-8023	505	1	4730-01-088-7798	7	6
5330-01-080-3253	104	15	4730-01-088-7798	333	3
5310-01-080-5746	487	13	5310-01-088-7962	254	14
5120-01-082-6436	503	6	5310-01-088-7962	492	17
5120-01-082-6447	503	7	4730-01-091-2809	15	13
5305-01-083-1591	465	2	4730-01-091-2809	16	12
4820-01-083-7993	176	10	4730-01-092-1904	331	2
5305-01-084-6067	124	17	4730-01-092-1904	332	9
5305-01-084-6067	125	17	5310-01-093-3493	492	17
5305-01-084-6067	366	3	6635-01-093-3710	499	1
5320-01-084-6101	197	26	6220-01-094-1440	62	1
5320-01-084-6101	199	37	5315-01-094-9025	403	11
5320-01-084-6101	290	10	5330-01-096-7699	78	2
5320-01-084-9234	211	24	5330-01-096-9650	172	19
5320-01-084-9234	212	23	2530-01-097-7659	172	3
5320-01-084-9234	258	9	5305-01-097-8178	350	10
5320-01-084-9234	259	1	2640-01-098-2029	167	21
5320-01-084-9234	260	17	5310-01-100-2067	62	5
5320-01-084-9235	197	24	5360-01-101-2143	245	13
5320-01-084-9235	199	38	5305-01-101-3312	443	7
5320-01-084-9235	212	8	5305-01-101-3312	457	4

CROSS REFERENCE INDEXES

NATIONAL STOCK NUMBER INDEX

STOCK NUMBER	FIGURE NO	ITEM NO	STOCK NUMBER	FIGURE NO	ITEM NO
5310-01-101-6046	340	8	5310-01-102-3170	272	9
5340-01-101-8262	18	2	5310-01-102-3170	274	4
5310-01-102-3170	13	17	5310-01-102-3170	274	9
5310-01-102-3170	14	23	5310-01-102-3170	275	4
5310-01-102-3170	15	2	5310-01-102-3170	276	2
5310-01-102-3170	16	2	5310-01-102-3170	276	30
5310-01-102-3170	17	10	5310-01-102-3170	277	22
5310-01-102-3170	27	13	5310-01-102-3170	285	2
5310-01-102-3170	29	4	5310-01-102-3170	286	38
5310-01-102-3170	43	47	5310-01-102-3170	331	10
5310-01-102-3170	97	3	5310-01-102-3170	332	3
5310-01-102-3170	98	14	5310-01-102-3170	333	8
5310-01-102-3170	99	7	5310-01-102-3170	398	17
5310-01-102-3170	124	11	5310-01-102-3170	399	14
5310-01-102-3170	125	11	5310-01-102-3170	400	12
5310-01-102-3170	153	2	5310-01-102-3170	409	10
5310-01-102-3170	155	13	5310-01-102-3170	411	2
5310-01-102-3170	169	28	5310-01-102-3170	411	9
5310-01-102-3170	198	21	5310-01-102-3170	413	4
5310-01-102-3170	202	25	5310-01-102-3170	415	16
5310-01-102-3170	203	6	5310-01-102-3170	430	23
5310-01-102-3170	204	2	5310-01-102-3170	430	37
5310-01-102-3170	233	5	5310-01-102-3170	440	9
5310-01-102-3170	241	4	5310-01-102-3170	446	15
5310-01-102-3170	243	14	5310-01-102-3170	453	9
5310-01-102-3170	244	8	5310-01-102-3170	484	7
5310-01-102-3170	245	10	5310-01-102-3170	486	6
5310-01-102-3170	245	17	5310-01-102-7356	154	1
5310-01-102-3170	245	33	5310-01-103-6042	176A	20
5310-01-102-3170	246	17	5305-01-104-4846	187	8
5310-01-102-3170	247	2	5305-01-104-4846	441	7
5310-01-102-3170	247	14	5130-01-104-5370	504	11
5310-01-102-3170	248	6	5342-01-104-7700	245	15
5310-01-102-3170	249	11	5310-01-105-9398	293	8
5310-01-102-3170	249	26	5310-01-106-1144	331	38
5310-01-102-3170	249	35	6220-01-107-2613	62	2
5310-01-102-3170	249	48	5331-01-107-4950	6	2
5310-01-102-3170	250	6	5305-01-109-0587	323	6
5310-01-102-3170	251	2	5310-01-110-1145	395	16
5310-01-102-3170	254	2	5340-01-110-4036	245	28
5310-01-102-3170	254	20	5340-01-110-4036	478	5
5310-01-102-3170	255	2	5305-01-111-2774	187	2
5310-01-102-3170	267	14	5305-01-111-2774	441	2
5310-01-102-3170	269	12	5306-01-114-0963	37	1
5310-01-102-3170	269	27	5306-01-114-0963	475	29
5310-01-102-3170	270	2	5306-01-114-0963	476	4
5310-01-102-3170	271	8	5340-01-114-7712	402	11

CROSS REFERENCE INDEXES

NATIONAL STOCK NUMBER INDEX

STOCK NUMBER	FIGURE NO	ITEM NO	STOCK NUMBER	FIGURE NO	ITEM NO
8315-01-115-7617	BULK	4	5310-01-119-1024	416	6
5305-01-117-3396	321	10	5310-01-119-1024	417	5
5305-01-117-3396	325	12	5310-01-119-1024	418	5
5305-01-117-3396	376	9	5310-01-119-1024	419	6
5310-01-117-3446	243	15	5310-01-119-1024	420	2
5360-01-118-5907	274	3	5310-01-119-1024	421	2
5360-01-118-5907	276	29	5310-01-119-1024	422	2
4730-01-118-8278	13	6	5310-01-119-1024	423	2
4730-01-118-8278	14	6	5310-01-119-1024	428	6
4730-01-118-8278	19	11	5310-01-119-1024	439	2
4730-01-118-8278	27	4	5310-01-119-1024	440	2
4730-01-118-8278	124	9	5310-01-119-1024	445	1
4730-01-118-8278	177	2	5310-01-119-1024	463	11
4730-01-118-8278	334	16	5310-01-119-3668	231	7
4730-01-118-8278	386	7	5310-01-119-3668	439	5
5310-01-119-1024	83	24	5310-01-119-3675	7	2
5310-01-119-1024	144	5	4730-01-119-6895	15	22
5310-01-119-1024	152	5	4730-01-119-6895	16	17
5310-01-119-1024	153	20	5305-01-120-4363	388	8
5310-01-119-1024	169	32	5310-01-121-1703	2	9
5310-01-119-1024	205	26	5310-01-121-1703	26	11
5310-01-119-1024	209	9	5310-01-121-1703	174	6
5310-01-119-1024	225	3	5310-01-121-1703	183	10
5310-01-119-1024	226	9	5310-01-121-1703	184	2
5310-01-119-1024	231	8	5310-01-121-1703	185	6
5310-01-119-1024	231	15	5310-01-121-1703	186	2
5310-01-119-1024	234	5	5310-01-121-1703	186	6
5310-01-119-1024	242	3	5310-01-121-1703	187	12
5310-01-119-1024	250	21	5310-01-121-1703	188	23
5310-01-119-1024	266	2	5310-01-121-1703	242	7
5310-01-119-1024	268	11	5310-01-121-1703	271	17
5310-01-119-1024	268	28	5310-01-121-1703	271	29
5310-01-119-1024	277	6	5310-01-121-1703	285	7
5310-01-119-1024	279	33	5310-01-121-1703	315	6
5310-01-119-1024	284	2	5310-01-121-1703	437	7
5310-01-119-1024	292	14	5310-01-121-1703	438	3
5310-01-119-1024	328	9	5310-01-121-1703	441	6
5310-01-119-1024	333	22	5310-01-121-1703	442	2
5310-01-119-1024	338	26	5310-01-121-1703	444	2
5310-01-119-1024	339	19	5310-01-121-1703	453	11
5310-01-119-1024	374	8	5310-01-121-1703	456	4
5310-01-119-1024	403	4	4330-01-121-6350	KITS	15
5310-01-119-1024	409	2	5305-01-122-0253	121	16
5310-01-119-1024	410	7	2540-01-123-1218	368	16
5310-01-119-1024	413	2	3040-01-123-4942	172	8
5310-01-119-1024	414	6	2530-01-123-8787	KITS	82
5310-01-119-1024	415	2	4030-01-124-8201	353	5

CROSS REFERENCE INDEXES

NATIONAL STOCK NUMBER INDEX

STOCK NUMBER	FIGURE NO	ITEM NO	STOCK NUMBER	FIGURE NO	ITEM NO
5340-01-125-1682	353	7	5325-01-136-4880	43B	21
2540-01-125-6154	388	16	5310-01-136-4888	40	17
5310-01-126-9404	329	12	5310-01-136-4888	43B	6
5310-01-127-2456	100	7	5325-01-136-7662	40	12
5310-01-127-2456	173	1	5325-01-136-7662	43B	19
2520-01-127-3969	116	17	5310-01-137-6801	350	8
6220-01-128-0087	62	4	5310-01-137-6801	351	8
5365-01-129-0399	271	13	5310-01-138-2605	314	23
5306-01-130-0457	463	8	5320-01-138-4239	219	10
5310-01-130-4274	196	7	5320-01-138-4239	235	4
5120-01-130-8865	500	4	5320-01-138-4239	235	18
5310-01-130-9065	471	9	5330-01-138-5190	KITS	86
5310-01-132-8275	12	12	5305-01-138-9540	46	4
5325-01-135-4290	268	35	5305-01-138-9540	97	11
5310-01-135-4730	131	1	5305-01-138-9540	367	1
5320-01-135-7319	197	11	5307-01-140-6594	268	38
5320-01-135-7319	199	15	5305-01-140-9118	175	7
5320-01-135-7319	211	3	5305-01-140-9118	272	24
5320-01-135-7319	213	37	4030-01-142-0456	276	4
5320-01-135-7319	214	30	5970-01-142-2282	96	17
5320-01-135-7319	218	1	5310-01-143-0512	12	20
5320-01-135-7319	219	1	5310-01-143-0512	23	22
5320-01-135-7319	227	39	5310-01-143-0512	127	14
5320-01-135-7319	237	17	5310-01-143-1679	39	45
5320-01-135-7319	278	1	5310-01-143-1679	39	76
5320-01-135-7319	291	6	5305-01-143-2328	327	38
5320-01-135-7319	292	5	5305-01-143-2328	477	8
5320-01-135-7319	365	1	5305-01-143-2328	480	2
5320-01-135-7319	366	26	5320-01-143-5075	197	27
5320-01-135-7319	368	5	5320-01-143-5075	199	35
5320-01-135-7319	369	8	5320-01-143-5075	208	13
5320-01-135-7319	379	21	5320-01-143-5075	213	36
5320-01-135-7319	384	14	5320-01-143-5075	214	29
4730-01-135-8310	148	30	5320-01-143-5075	220	6
5320-01-136-1782	64	2	5320-01-143-5075	300	15
5320-01-136-1782	197	8	5320-01-143-5079	208	10
5320-01-136-1782	199	17	5320-01-143-5079	220	1
5320-01-136-1782	212	9	5320-01-143-5079	230	24
5320-01-136-1782	229	5	5320-01-143-5079	231	29
5320-01-136-1782	238	11	5320-01-143-5079	369	15
5320-01-136-1782	287	1	5977-01-143-6996	39	68
5320-01-136-1782	289	6	5310-01-144-2779	172	18
5320-01-136-1785	219	4	5120-01-144-4484	499	3
5320-01-136-1785	287	14	5325-01-144-4871	68	8
5320-01-136-1785	290	8	5330-01-145-5376	39	69
5320-01-136-1787	288	3	5330-01-146-6053	111	3
5320-01-136-1787	290	5	6620-01-146-8006	30	1

CROSS REFERENCE INDEXES

NATIONAL STOCK NUMBER INDEX

STOCK NUMBER	FIGURE NO	ITEM NO	STOCK NUMBER	FIGURE NO	ITEM NO
5935-01-147-0148	95	21	5305-01-149-1938	31	8
5935-01-147-0148	96	2	2520-01-149-3809	113	16
5310-01-147-4052	144	2	5310-01-149-4407	26	13
5310-01-147-4052	152	2	5340-01-149-4434	399	8
5310-01-147-4052	165	2	2520-01-149-4993	128	61
5310-01-147-4052	166	2	2520-01-149-4993	129	33
5310-01-147-4052	181	11	3020-01-149-5049	111	14
5310-01-147-4052	182	1	4710-01-149-5075	11	30
5310-01-147-4052	183	7	4710-01-149-5076	11	11
5310-01-147-4052	184	14	4710-01-149-5077	11	24
5310-01-147-4052	188	17	5935-01-149-5165	76	2
5310-01-147-4052	188	29	5935-01-149-5165	79	6
5310-01-147-4052	195	1	5935-01-149-5165	86	27
5310-01-147-4052	270	34	5306-01-149-6280	4	4
5310-01-147-4052	470	10	5306-01-149-6280	8	5
2930-01-147-4198	30	3	5306-01-149-6280	30	16
2590-01-147-4285	4	2	5360-01-149-6308	176	9
4820-01-147-4294	100	3	3040-01-149-6706	111	1
5305-01-147-5864	39	52	3040-01-149-6759	116	2
5998-01-147-7895	39	74	5310-01-149-7793	121	11
5310-01-147-8743	490	5	5340-01-149-7811	116	21
2990-01-147-9284	7	3	2520-01-149-7861	106	11
5330-01-147-9808	31	4	2520-01-149-7861	KITS	28
5310-01-148-0240	68	4	4730-01-149-7935	118	5
4710-01-148-2659	11	1	3020-01-149-7938	106	23
5310-01-148-2687	129	35	3020-01-149-7941	106	10
4730-01-148-2758	31	2	3020-01-149-7941	107	8
4720-01-148-2768	BULK	14	5305-01-149-9673	31	11
5306-01-148-3666	30	10	3040-01-150-0407	106	7
5306-01-148-3667	11	5	4730-01-150-0879	6	6
5305-01-148-5915	8	4	4710-01-150-0971	11	16
5330-01-148-7492	104	7	5306-01-150-1190	31	12
5340-01-148-7528	10	5	5306-01-150-1190	122	33
5340-01-148-7529	11	31	5307-01-150-1227	8	2
5340-01-148-8349	10	4	5307-01-150-1227	30	5
6680-01-148-8875	66	4	5305-01-150-1521	11	14
3020-01-148-9548	128	41	5307-01-150-1549	31	13
4710-01-148-9580	11	10	2520-01-150-2279	111	10
4710-01-148-9581	11	28	2520-01-150-2280	113	7
4710-01-148-9582	11	17	2520-01-150-3931	112	15
5330-01-149-0874	30	12	2520-01-150-3932	109	3
2520-01-149-1221	105	2	2520-01-150-3932	110	3
2520-01-149-1221	106	2	2520-01-150-3932	111	16
4320-01-149-1866	121	1	2520-01-150-3932	112	16
5340-01-149-1867	121	4	5310-01-150-4003	127	9
2520-01-149-1868	109	14	5310-01-150-4003	136	3
2520-01-149-1868	114	3	5310-01-150-4003	144	14

CROSS REFERENCE INDEXES

NATIONAL STOCK NUMBER INDEX

STOCK NUMBER	FIGURE NO	ITEM NO	STOCK NUMBER	FIGURE NO	ITEM NO
5310-01-150-4003	152	14	5340-01-151-4964	116	5
5310-01-150-4003	271	12	3040-01-151-5663	116	9
5310-01-150-4003	271	27	3040-01-151-5663	117	16
5310-01-150-4003	398	8	5330-01-151-6106	118	1
5310-01-150-4003	464	8	5325-01-151-6117	4	3
5340-01-150-4106	11	20	5310-01-151-7347	140	7
5306-01-150-4835	104	4	5310-01-151-7347	147	7
4820-01-150-4964	118	11	5310-01-151-7347	170	20
5325-01-150-4982	106	15	5310-01-151-7347	185	4
5325-01-150-4982	107	23	5310-01-151-7347	187	3
5310-01-150-5919	116	24	5310-01-151-7347	195	11
5310-01-150-5919	117	10	5310-01-151-7347	196	2
5310-01-150-5921	121	20	5310-01-151-7347	441	3
5330-01-150-5928	116	20	5310-01-151-7347	457	19
5330-01-150-5944	10	1	5310-01-151-7347	470	11
5307-01-150-5991	8	3	5330-01-151-8364	118	3
5307-01-150-5992	365	17	5340-01-151-9956	11	4
5340-01-150-6026	11	15	5310-01-152-0598	51	4
5360-01-150-6086	116	6	5310-01-152-0598	69	34
5360-01-150-6086	117	5	5310-01-152-0598	77	13
5360-01-150-6087	116	8	5310-01-152-0598	83	15
5360-01-150-6091	109	7	5310-01-152-0598	83	31
5360-01-150-6091	111	7	5310-01-152-0598	88	17
5325-01-150-6092	109	13	5310-01-152-0598	88	29
5330-01-150-6239	116	10	5310-01-152-0598	89	11
5330-01-150-6239	117	15	5310-01-152-0598	95	40
5340-01-150-6275	11	21	5310-01-152-0598	155	6
5935-01-150-6319	100	4	5310-01-152-0598	214	9
2520-01-150-7609	113	3	5310-01-152-0598	304	7
5330-01-150-7744	4	28	5310-01-152-0598	307	6
5340-01-150-7774	11	29	5310-01-152-0598	308	15
5360-01-150-7829	116	23	5310-01-152-0598	313	11
5360-01-150-7829	117	9	5310-01-152-0598	320	18
5325-01-150-7830	113	1	5310-01-152-0598	320	31
5325-01-150-7830	114	10	5310-01-152-0598	339	29
5935-01-150-8322	86	26	5310-01-152-0598	378	19
5306-01-150-8713	118	10	5310-01-152-0598	410	33
5999-01-150-8808	86	7	5310-01-152-0598	412	14
5306-01-150-9497	104	13	5310-01-152-0598	414	22
5307-01-150-9538	11	6	5310-01-152-0598	416	25
5307-01-150-9538	12	17	5310-01-152-0598	428	24
5305-01-150-9781	4	25	5310-01-152-0598	443	14
4710-01-151-3663	118	6	5310-01-152-0598	453	3
2520-01-151-3857	116	15	5310-01-152-0598	457	13
5310-01-151-4137	116	3	5310-01-152-0598	480	23
5315-01-151-4180	9	5	3120-01-152-2613	128	73
5306-01-151-4925	9	6	6680-01-152-2845	176	1

CROSS REFERENCE INDEXES

NATIONAL STOCK NUMBER INDEX

STOCK NUMBER	FIGURE NO	ITEM NO	STOCK NUMBER	FIGURE NO	ITEM NO
5310-01-152-4229	121	12	3110-01-155-2600	128	67
5306-01-152-4693	22	1	3120-01-155-3509	128	42
5306-01-152-4696	128	21	5330-01-155-4383	113	13
5306-01-152-4696	130	21	5330-01-155-4393	128	70
4710-01-152-5798	104	14	3110-01-155-4438	109	15
5330-01-152-5941	121	19	3110-01-155-4440	128	1
5330-01-152-5942	118	13	3110-01-155-4440	130	38
5315-01-152-9029	100	15	3120-01-155-4462	121	17
5315-01-152-9031	116	4	3120-01-155-4463	121	17
5315-01-152-9038	117	7	3120-01-155-4464	121	17
5315-01-152-9039	116	7	3120-01-155-4465	121	17
5315-01-152-9039	117	7	3120-01-155-4466	121	17
5315-01-152-9040	116	7	3120-01-155-4467	121	17
5315-01-152-9040	117	7	3120-01-155-4468	113	9
5365-01-153-0872	104	5	3120-01-155-4468	114	18
5360-01-153-0933	113	8	3120-01-155-4470	128	40
4710-01-153-1636	11	18	4320-01-155-5145	176	6
4730-01-153-1871	345	40	4320-01-155-5153	176	13
4730-01-153-1871	348	32	4720-01-155-7784	BULK	26
5930-01-153-8215	68	10	3120-01-155-8713	128	43
5935-01-153-9320	76	13	3110-01-155-9862	128	37
5340-01-153-9425	177	14	4720-01-156-0549	BULK	12
2520-01-154-1185	118	14	4720-01-156-0550	BULK	13
5905-01-154-2354	498	6	5306-01-156-3730	445	13
3120-01-154-4369	106	30	5330-01-156-5147	4	7
3120-01-154-4369	107	25	3120-01-156-5189	106	8
5935-01-154-6233	79	5	3120-01-156-5189	121	5
3120-01-154-6272	487	12	5305-01-156-8692	157	18
5340-01-154-6559	116	22	5305-01-156-8692	158	17
5340-01-154-6559	117	8	3120-01-156-8763	111	15
5330-01-154-7159	4	10	3120-01-156-8763	112	14
3120-01-154-7174	106	14	5330-01-157-0856	8	6
3120-01-154-7174	106	28	5331-01-157-1884	176	14
3120-01-154-7174	107	15	5325-01-157-6764	128	25
3120-01-154-7174	107	24	5325-01-157-6764	128	47
3120-01-154-8516	106	30	5325-01-157-6764	130	41
3120-01-154-8516	107	25	5340-01-158-0098	79	4
3120-01-154-8517	106	30	5325-01-158-2182	113	6
3120-01-154-8517	107	25	5325-01-158-2182	114	4
5325-01-154-8561	106	3	5306-01-158-6224	7	1
5325-01-154-8561	107	3	5310-01-158-6257	75	36
5325-01-154-8562	107	1	5310-01-158-6257	77	17
9320-01-155-2369	BULK	58	3120-01-158-6304	106	18
5310-01-155-2503	7	5	9905-01-158-7981	357	4
5310-01-155-2503	10	6	5306-01-158-9917	12	22
5310-01-155-2503	75	27	5305-01-159-0065	175A	11
5310-01-155-2503	101	4	5340-01-159-1788	121	7

CROSS REFERENCE INDEXES

NATIONAL STOCK NUMBER INDEX

STOCK NUMBER	FIGURE NO	ITEM NO	STOCK NUMBER	FIGURE NO	ITEM NO
2530-01-159-2732	106	27	5340-01-163-4773	151	40
5330-01-159-2811	128	52	2520-01-163-4999	126	2
5330-01-159-2811	129	25	5930-01-163-6256	55	7
3120-01-159-5773	106	30	4730-01-163-7163	105	3
3120-01-159-5773	107	25	3040-01-163-7208	4	8
4720-01-159-5796	BULK	25	2520-01-163-7213	KITS	91
5340-01-159-6626	11	25	4720-01-163-7833	BULK	11
2520-01-159-7757	128	80	2520-01-163-7866	109	11
2520-01-159-7757	129	38	2520-01-163-7866	111	6
2590-01-159-8757	132	2	5935-01-163-8981	348	2
2590-01-159-8757	132	15	5935-01-163-8987	348	8
5342-01-160-4397	4	5	5310-01-164-0745	351	5
5325-01-160-4618	11	12	5310-01-164-1023	350	7
5315-01-160-4642	128	10	5310-01-164-1023	351	7
5315-01-160-4642	130	23	2540-01-164-6170	348	9
5325-01-160-4693	106	32	4730-01-164-7028	8	8
5325-01-160-4693	113	5	2520-01-164-7157	116	11
5325-01-160-4693	114	5	2520-01-164-7157	KITS	97
2530-01-160-9569	167	1	2520-01-164-7158	100	9
2520-01-160-9570	118	7	2520-01-164-7234	102	1
5331-01-160-9857	467	7	5306-01-164-8486	118	9
5331-01-160-9857	493	1	2540-01-165-0465	345	19
5331-01-160-9857	496	11	2540-01-165-0465	348	19
2640-01-161-2114	167	5	5340-01-165-0745	348	30
2520-01-161-2136	104	1	2540-01-165-0814	350	2
3120-01-161-4033	106	30	2540-01-165-0814	351	1
3120-01-161-4033	107	25	5310-01-165-1312	40	8
4820-01-161-6435	496	10	5310-01-165-1312	43B	28
5970-01-161-6796	BULK	31	5360-01-165-1563	4	16
5310-01-161-7308	54	13	5930-01-165-1657	55	18
2540-01-162-4339	348	35	5310-01-165-3331	4	30
3120-01-162-5787	106	30	5310-01-165-3331	7	8
3120-01-162-5787	107	25	5310-01-165-3331	11	26
5340-01-162-5883	108	10	5306-01-165-4283	128	23
5305-01-162-8512	12	2	5306-01-165-4283	130	19
2520-01-162-8985	132	3	5330-01-165-4333	113	12
2520-01-162-8985	132	7	5330-01-165-4333	121	18
2520-01-162-8985	132	14	6150-01-165-4667	345	26
2520-01-162-8985	132	21	6150-01-165-4667	348	24
5305-01-162-9713	176	12	5306-01-165-5582	4	12
5970-01-163-1103	BULK	35	2540-01-165-8175	345	31
5330-01-163-2614	116	1	2540-01-165-8175	348	25
5330-01-163-2614	117	3	2540-01-165-8176	345	29
4710-01-163-2805	345	33	2540-01-165-8176	348	31
4710-01-163-2805	348	28	2520-01-165-9563	100	13
4730-01-163-3544	11	2	2520-01-165-9563	118	8
5340-01-163-4773	150	34	5342-01-166-1534	11	22

CROSS REFERENCE INDEXES

NATIONAL STOCK NUMBER INDEX

STOCK NUMBER	FIGURE NO	ITEM NO	STOCK NUMBER	FIGURE NO	ITEM NO
5340-01-166-1672	25	2	5120-01-170-3278	501	3
5340-01-166-1672	103	5	5940-01-170-4956	41	10
5331-01-166-1712	493	3	5940-01-170-4956	41	19
4730-01-166-2244	104	3	5940-01-170-4956	313	15
4730-01-166-2244	105	11	5940-01-170-4956	474	11
3120-01-166-3677	106	29	5310-01-170-8765	411	18
5325-01-166-6324	128	74	2520-01-170-9826	111	12
3110-01-167-2443	KITS	88	5325-01-171-3392	109	5
3040-01-167-2836	106	31	5325-01-171-3392	110	10
5355-01-167-4114	54	7	5325-01-171-3392	111	9
3120-01-167-4172	KITS	87	5325-01-171-3392	112	9
6685-01-167-4298	67	1	2610-01-171-4746	168	1
5306-01-167-4346	128	64	4130-01-171-5997	494	13
5340-01-167-7794	10	7	2520-01-171-8258	137	4
5340-01-167-9314	394	2	5310-01-173-0941	163	5
2520-01-168-1983	106	16	5315-01-173-3397	277	19
2520-01-168-2060	113	4	5315-01-173-3397	277	46
5330-01-168-3870	128	66	4820-01-173-6883	14	27
5330-01-168-3870	129	3	5935-01-173-7654	75	18
2920-01-168-4127	35	18	2510-01-173-9316	266	10
2920-01-168-4127	43	54	2520-01-173-9673	128	58
2920-01-168-4128	KITS	100	5340-01-174-2271	142	24
2920-01-168-4129	KITS	104	5340-01-174-2271	143	32
2920-01-168-4130	KITS	105	5340-01-174-2271	150	24
2920-01-168-4131	43	27	5340-01-174-2271	151	32
2920-01-168-4132	43	33	5935-01-174-3669	75	19
5325-01-168-5729	106	12	2530-01-174-4174	142	31
2930-01-168-7870	34	2	2530-01-174-4174	150	31
2815-01-168-7871	4	9	5340-01-174-4894	370	23
4730-01-168-7872	6	5	5340-01-174-4894	394	3
2520-01-168-7878	128	60	2520-01-174-5849	148	15
2920-01-168-7891	44	2	2520-01-174-5919	132	11
2815-01-168-7892	1	2	3020-01-174-5984	142	29
2910-01-168-7905	9	1	3020-01-174-5984	150	29
2815-01-168-7909	8	7	3020-01-174-5985	142	10
2930-01-168-7911	5	2	3020-01-174-5985	150	10
2815-01-168-7912	4	22	2530-01-174-7441	156	1
2920-01-168-7914	35	5	2540-01-174-7696	206	14
2815-01-168-7917	8	10	3020-01-174-7810	128	79
2815-01-168-7918	8	11	5330-01-174-8090	116	12
2540-01-168-9481	351	11	5310-01-174-8091	128	20
2540-01-168-9482	350	9	5310-01-174-8091	129	36
2540-01-168-9482	351	9	3110-01-174-8136	109	16
3110-01-169-0734	KITS	89	5330-01-174-8145	148	14
5120-01-169-4876	501	2	5330-01-174-8146	148	7
2520-01-169-7674	111	2	2520-01-174-8153	KITS	94
4720-01-169-9891	BULK	19	5365-01-174-8154	128	28

CROSS REFERENCE INDEXES

NATIONAL STOCK NUMBER INDEX

STOCK NUMBER	FIGURE NO	ITEM NO	STOCK NUMBER	FIGURE NO	ITEM NO
3120-01-174-8155	128	33	2520-01-174-9554	128	18
3120-01-174-8156	128	78	2520-01-174-9554	129	32
5310-01-174-8158	128	11	2520-01-174-9554	129	34
5310-01-174-8158	130	22	2520-01-174-9580	148	12
5365-01-174-8174	KITS	45	5310-01-175-0617	148	10
5365-01-174-8184	KITS	74	3020-01-175-1962	128	75
5365-01-174-8185	128	29	3110-01-175-3538	KITS	75
5365-01-174-8186	142	4	5365-01-175-3593	KITS	44
5365-01-174-8186	143	4	2520-01-175-6401	128	13
5365-01-174-8186	150	4	3020-01-175-6477	128	32
5365-01-174-8186	151	4	2520-01-175-6492	113	2
5306-01-174-8492	128	56	2520-01-175-6494	132	1
5340-01-174-8493	142	13	5340-01-175-7208	140	9
5340-01-174-8493	143	13	2530-01-175-7210	152	6
5340-01-174-8493	150	13	2530-01-175-7211	144	6
5340-01-174-8493	151	13	2530-01-175-7212	144	20
5310-01-174-8607	142	21	2530-01-175-7212	152	20
5310-01-174-8607	143	28	2530-01-175-7213	144	20
5310-01-174-8607	150	21	2530-01-175-7213	152	20
5310-01-174-8607	151	28	2920-01-175-7214	66	2
5360-01-174-8613	132	5	2510-01-175-7216	182	11
5360-01-174-8614	132	10	2510-01-175-7217	183	12
5331-01-174-8618	128	77	2510-01-175-7218	183	22
5305-01-174-8625	148	24	2510-01-175-7219	182	17
5325-01-174-8626	106	19	2520-01-175-7220	103	1
5325-01-174-8626	107	21	2510-01-175-7221	179	11
3120-01-174-8630	128	35	9520-01-175-7222	184	5
3120-01-174-8631	128	34	2510-01-175-7224	181	17
5310-01-174-8632	142	8	5945-01-175-7318	118	4
5310-01-174-8632	150	8	5325-01-175-7442	387	13
5307-01-174-8640	128	68	5306-01-175-7577	167	3
5307-01-174-8640	129	7	3010-01-176-0557	128	39
5315-01-174-8644	116	7	5330-01-176-0825	142	12
5315-01-174-8644	117	7	5330-01-176-0825	143	12
5315-01-174-8645	116	7	5330-01-176-0825	150	12
5315-01-174-8645	117	7	5330-01-176-0825	151	12
5315-01-174-8646	116	7	5310-01-176-0839	142	25
5315-01-174-8646	117	7	5310-01-176-0839	143	33
5315-01-174-8647	116	7	5310-01-176-0839	150	25
5315-01-174-8647	117	7	5310-01-176-0839	151	33
3040-01-174-9130	148	1	5331-01-176-0923	167	4
2520-01-174-9287	128	26	2940-01-176-1427	489	1
2520-01-174-9288	128	31	5120-01-176-1845	500	5
2520-01-174-9291	128	5	3040-01-176-2835	132	9
5970-01-174-9449	73	19	2520-01-176-2840	132	12
5970-01-174-9449	73	23	2530-01-176-4649	152	6
5970-01-174-9449	480	27	2530-01-176-4650	144	6

CROSS REFERENCE INDEXES

NATIONAL STOCK NUMBER INDEX

STOCK NUMBER	FIGURE NO	ITEM NO	STOCK NUMBER	FIGURE NO	ITEM NO
2540-01-176-6521	205	12	5365-01-181-5085	150	23
3040-01-176-9584	128	76	9905-01-181-9456	357	3
3040-01-176-9615	128	53	5340-01-182-1074	22	2
3040-01-177-2427	128	46	4730-01-182-6565	30	15
3040-01-177-2428	128	36	4730-01-182-6565	31	7
3020-01-177-5441	128	24	3120-01-182-8417	121	17
3020-01-177-5441	128	48	5331-01-183-0971	6	8
5365-01-177-5720	142	26	5930-01-183-6637	66	9
5365-01-177-5720	143	34	5930-01-183-6757	67	7
5365-01-177-5720	150	26	5340-01-183-7233	60	3
5365-01-177-5720	151	34	5340-01-183-7233	61	3
4730-01-177-7501	104	23	5999-01-183-9530	327	18
4730-01-177-7501	105	5	5905-01-183-9636	333	1
4910-01-178-0722	500	3	6160-01-184-0643	71	1
4910-01-178-0724	510	1	6160-01-184-0728	71	5
4910-01-178-6551	511	7	2920-01-184-1054	45	21
5307-01-178-7445	31	10	2910-01-184-2159	15	10
4910-01-178-8865	499	5	5995-01-184-2228	79	1
2520-01-178-9768	128	72	2540-01-184-4389	165	4
5120-01-179-1032	503	8	2590-01-184-4475	184	3
4910-01-179-2517	503	5	4730-01-184-4760	141	25
5360-01-179-4106	192	1	5330-01-184-5421	157	12
5360-01-179-4107	192	1	5330-01-184-5421	158	8
4710-01-179-4346	400	5	2510-01-184-5497	331	12
6680-01-179-4349	400	4	2910-01-184-5498	331	5
6680-01-179-4350	3	4	2910-01-184-5499	331	1
4820-01-179-4869	511	15	2540-01-184-5500	328	10
4910-01-179-5530	502	3	2520-01-184-5501	97	1
2530-01-179-7511	KITS	14	2540-01-184-5502	99	4
2530-01-179-7589	163	1	2540-01-184-5503	327	21
2530-01-179-7590	164	1	5995-01-184-5544	80	1
2590-01-179-7602	313	12	5995-01-184-5545	75	1
2590-01-179-7602	443	15	5310-01-184-5784	194	2
5365-01-180-2585	148	5	5935-01-184-6417	85	24
5940-01-180-3655	69	5	5935-01-184-6417	86	15
5940-01-180-3655	481	1	5330-01-184-6492	103	10
6625-01-180-6542	47	10	5330-01-184-6492	400	6
2920-01-180-8666	43	23	5330-01-184-6500	6	3
6685-01-180-9037	47	9	2540-01-184-6602	230	3
5330-01-180-9099	142	11	4730-01-184-6971	159	8
5330-01-180-9099	143	11	4730-01-184-6971	160	6
5330-01-180-9099	150	11	4730-01-184-6971	161	9
5330-01-180-9099	151	11	4730-01-184-6971	162	17
5970-01-180-9776	75	8	4730-01-184-6971	487A	10
6620-01-181-1757	47	11	4730-01-184-6971	487D	6
2530-01-181-3907	100	14	2520-01-184-7036	99	22
5365-01-181-5085	142	23	6680-01-184-9214	103	8

CROSS REFERENCE INDEXES

NATIONAL STOCK NUMBER INDEX

STOCK NUMBER	FIGURE NO	ITEM NO	STOCK NUMBER	FIGURE NO	ITEM NO
2530-01-184-9821	156	19	9905-01-185-3207	358	3
5305-01-185-0114	213	24	7690-01-185-3208	358	1
5305-01-185-0114	225	15	2540-01-185-3214	402	1
5305-01-185-0114	234	14	2540-01-185-3216	402	KIT
5305-01-185-0114	246	6	2540-01-185-3216	452	2
5305-01-185-0114	254	16	9340-01-185-3757	225	55
5305-01-185-0114	260	20	2530-01-185-3879	158	12
5305-01-185-0114	260	25	2540-01-185-4387	235	9
5305-01-185-0114	287	7	3040-01-185-4388	99	21
5305-01-185-0114	321	22	3040-01-185-4388	133	11
5305-01-185-0114	326	5	2590-01-185-4390	240	16
5342-01-185-0116	225	56	2590-01-185-4390	429	26
5342-01-185-0116	226	37	2590-01-185-4391	240	16
5340-01-185-0386	205	3	5305-01-185-4628	156	2
5340-01-185-0386	206	8	5310-01-185-4672	137	16
5340-01-185-0401	225	45	5340-01-185-4959	225	5
5340-01-185-0401	226	32	5340-01-185-4959	226	40
5340-01-185-0404	225	43	4730-01-185-5348	12	41
5330-01-185-0587	21	24	4730-01-185-5348	135	3
6680-01-185-1264	67	4	4730-01-185-5348	141	26
5305-01-185-2211	216	8	4730-01-185-5348	149	14
5305-01-185-2211	221	4	4730-01-185-5348	399	4
2510-01-185-3107	205	37	2510-01-185-6112	2	4
5365-01-185-3108	204	4	2510-01-185-6113	2	10
9515-01-185-3109	267	15	2510-01-185-6114	2	12
9515-01-185-3110	267	19	2510-01-185-6115	2	1
9515-01-185-3111	267	8	2540-01-185-6117	46	8
2590-01-185-3112	277	11	2510-01-185-6118	205	22
2540-01-185-3113	277	24	2540-01-185-6119	240	8
3110-01-185-3114	277	9	4710-01-185-6179	10	3
2590-01-185-3115	314	32	2510-01-185-6647	182	19
2590-01-185-3116	314	24	2510-01-185-6648	182	19
9515-01-185-3118	267	12	4720-01-185-6673	BULK	22
9515-01-185-3119	267	20	2540-01-185-6710	185	9
9905-01-185-3127	358	2	2590-01-185-6711	182	12
9905-01-185-3129	354	12	2590-01-185-6711	183	20
9905-01-185-3131	354	12	2530-01-185-6712	157	23
9905-01-185-3132	354	12	2530-01-185-6712	158	13
9905-01-185-3134	354	12	2530-01-185-6713	157	20
9905-01-185-3138	354	12	2530-01-185-6713	158	15
9905-01-185-3139	354	12	2530-01-185-6714	158	9
9905-01-185-3143	355	1	2510-01-185-6715	202	29
2510-01-185-3155	268	3	5340-01-185-6997	225	10
6105-01-185-3187	314	27	5340-01-185-6998	225	27
2540-01-185-3197	187	1	5340-01-185-7024	225	18
3040-01-185-3201	314	8	5306-01-185-7048	1	6
6680-01-185-3202	400	3	5306-01-185-7048	103	13

CROSS REFERENCE INDEXES

NATIONAL STOCK NUMBER INDEX

STOCK NUMBER	FIGURE NO	ITEM NO	STOCK NUMBER	FIGURE NO	ITEM NO
5306-01-185-7048	138	18	2530-01-185-7998	158	10
5306-01-185-7048	139	16	3040-01-185-8011	314	9
5306-01-185-7048	145	18	2540-01-185-8015	403	14
5306-01-185-7048	146	16	2540-01-185-8016	402	1
5306-01-185-7048	175	10	5120-01-185-8024	501	10
5306-01-185-7051	66A	13	4720-01-185-8152	12	8
5306-01-185-7052	137	15	6150-01-185-8240	327	16
5306-01-185-7052	239	11	4710-01-185-8328	161	13
5306-01-185-7071	71	3	4710-01-185-8329	161	8
5305-01-185-7122	179	7	5340-01-185-8619	203	8
5305-01-185-7122	180	8	5340-01-185-8620	179	14
5305-01-185-7122	184	11	5305-01-185-8647	199	4
5310-01-185-7188	69	6	5305-01-185-8647	225	19
5310-01-185-7188	70	5	5305-01-185-8647	232	4
5310-01-185-7208	69	8	5305-01-185-8647	462	9
5310-01-185-7208	70	3	5305-01-185-8657	157	17
5310-01-185-7214	12	11	5305-01-185-8657	158	1
5310-01-185-7214	364	1	5305-01-185-8673	156	15
5310-01-185-7214	436	7	5305-01-185-8674	240	4
5310-01-185-7218	138	19	5305-01-185-8674	240	18
5310-01-185-7218	139	17	5305-01-185-8674	240	22
5310-01-185-7218	145	19	5305-01-185-8674	269	6
5310-01-185-7218	146	17	5305-01-185-8674	442	5
5315-01-185-7421	21	27	5310-01-185-8689	194	9
2510-01-185-7945	204	11	5310-01-185-8690	157	19
2510-01-185-7946	206	17	5310-01-185-8690	158	16
2590-01-185-7947	314	30	5310-01-185-8691	156	12
3020-01-185-7948	314	7	5310-01-185-8692	328	4
2590-01-185-7949	314	6	5330-01-185-8709	331	17
2510-01-185-7950	204	11	5330-01-185-8714	206	11
2540-01-185-7951	403	2	5330-01-185-8715	205	40
5120-01-185-7955	501	5	5340-01-185-8723	230	17
5120-01-185-7956	501	8	5340-01-185-8724	266	5
5120-01-185-7957	502	9	5315-01-185-8781	165	1
5340-01-185-7959	398	18	5315-01-185-8781	166	1
5120-01-185-7960	501	21	5360-01-185-8809	156	7
5120-01-185-7962	502	8	5340-01-185-8820	240	14
5120-01-185-7963	503	2	5340-01-185-8820	451	1
5120-01-185-7964	502	2	5340-01-185-8821	202	27
5120-01-185-7965	503	9	4730-01-185-9453	19	22
4910-01-185-7966	504	2	4730-01-185-9453	27	10
9905-01-185-7970	355	4	2540-01-185-9530	202	17
9905-01-185-7972	354	12	2530-01-185-9651	170	6
9905-01-185-7973	354	12	2540-01-185-9656	21	26
9905-01-185-7975	354	12	4710-01-185-9665	161	6
9905-01-185-7977	354	20	4710-01-185-9666	159	1
2530-01-185-7998	157	14	4710-01-185-9667	159	5

CROSS REFERENCE INDEXES

NATIONAL STOCK NUMBER INDEX

STOCK NUMBER	FIGURE NO	ITEM NO	STOCK NUMBER	FIGURE NO	ITEM NO
4710-01-185-9667	160	8	5340-01-186-5520	205	41
4710-01-185-9668	159	7	3120-01-186-5527	144	7
2540-01-186-0501	185	5	3120-01-186-5527	144	21
2540-01-186-0501	187	5	3120-01-186-5527	152	7
4820-01-186-0822	159	2	3120-01-186-5527	152	21
2590-01-186-0863	179	10	5315-01-186-5633	202	37
2590-01-186-0863	180	16	4730-01-186-5994	19	15
3040-01-186-0967	165	10	4720-01-186-6018	27	5
2540-01-186-0969	327	8	2910-01-186-6038	15	16
4710-01-186-1009	13	1	2540-01-186-6039	191	6
4710-01-186-1010	13	5	5310-01-186-6930	69	9
4710-01-186-1016	159	10	5310-01-186-7066	69	7
5310-01-186-1245	197	34	5310-01-186-7066	70	4
5310-01-186-1254	1	3	5310-01-186-7066	473	8
5340-01-186-1280	266	6	5306-01-186-7128	181	14
5340-01-186-1280	284	4	5306-01-186-7129	205	25
5340-01-186-1281	266	6	5340-01-186-7173	2	13
5340-01-186-1281	284	4	3120-01-186-7181	158	4
5365-01-186-1294	196	3	5340-01-186-7229	205	28
5365-01-186-1294	196	8	5365-01-186-7233	158	3
5340-01-186-1388	202	32	5342-01-186-7236	196	5
5340-01-186-1817	157	10	5342-01-186-7236	196	15
5340-01-186-1817	158	6	5342-01-186-7382	225	35
4720-01-186-2358	BULK	23	5342-01-186-7382	226	23
2510-01-186-3106	197	28	5340-01-186-7593	225	25
2510-01-186-3107	199	34	5340-01-186-7594	225	11
9515-01-186-3111	267	21	5340-01-186-7658	202	8
5180-01-186-3114	499	8	5340-01-186-7664	183	6
9905-01-186-3253	354	12	5310-01-186-7702	79	15
9905-01-186-3255	354	12	3120-01-186-7714	21	23
9905-01-186-3259	354	12	3120-01-186-7715	205	27
2510-01-186-3311	204	8	5330-01-186-7757	15	30
5310-01-186-3483	222	13	5330-01-186-7757	16	42
2590-01-186-3614	99	1	5365-01-186-7764	193	1
3040-01-186-3718	194	10	5980-01-186-8319	46	2
5360-01-186-3737	21	25	2590-01-186-8704	331	33
2530-01-186-3740	195	10	5340-01-186-8768	19	17
5360-01-186-4844	99	26	5340-01-186-9496	202	38
5360-01-186-4845	165	12	5340-01-186-9606	15	32
5360-01-186-4845	166	3	5340-01-186-9606	16	19
5310-01-186-5237	128	19	4710-01-186-9617	15	9
5310-01-186-5237	128	63	4710-01-186-9617	16	8
5306-01-186-5369	188	27	4710-01-186-9620	161	5
5306-01-186-5369	442	18	4710-01-186-9620	162	5
5305-01-186-5381	103	11	5307-01-187-0519	4	17
5305-01-186-5381	105	23	5310-01-187-0678	374	15
5310-01-186-5420	156	13	5980-01-187-0791	46	3

CROSS REFERENCE INDEXES

NATIONAL STOCK NUMBER INDEX

STOCK NUMBER	FIGURE NO	ITEM NO	STOCK NUMBER	FIGURE NO	ITEM NO
5340-01-187-0892	11	27	5340-01-188-1018	226	5
5340-01-187-0892	13	2	5310-01-188-1093	169	4
5340-01-187-0892	14	2	5307-01-188-1229	194	11
5340-01-187-0892	141	21	4720-01-188-1370	29	12
2920-01-187-1310	45	8	4720-01-188-3190	BULK	21
5325-01-187-1604	23	19	2940-01-188-3224	12	5
5325-01-187-1604	24	18	2590-01-188-3225	225	51
5325-01-187-1604	26	2	2590-01-188-3225	226	34
2510-01-187-2238	46	1	2510-01-188-3228	203	18
2510-01-187-2239	194	3	2540-01-188-3229	235	3
4720-01-187-3386	29	7	5342-01-188-3233	99	27
4720-01-187-3387	7	7	3040-01-188-3234	99	28
5310-01-187-3485	193	2	2590-01-188-3237	240	5
2510-01-187-3606	278	4	4710-01-188-3238	103	9
5120-01-187-3607	503	1	2540-01-188-3239	181	15
5120-01-187-3659	502	4	2590-01-188-3267	17	2
5120-01-187-3660	502	1	5995-01-188-3269	81	1
5330-01-187-5148	15	27	2990-01-188-3281	23	7
5330-01-187-5148	16	36	4730-01-188-3296	104	16
4710-01-187-6759	13	9	2940-01-188-3387	12	28
4710-01-187-6759	13	16	4710-01-188-3515	124	7
4710-01-187-6759	14	15	4710-01-188-3515	125	6
4710-01-187-6759	14	22	4710-01-188-3516	124	6
4720-01-187-6911	5	10	4710-01-188-3516	125	7
4730-01-187-6929	6	4	2530-01-188-3520	153	7
5342-01-187-7029	12	36	3040-01-188-3607	145	9
2990-01-187-7030	23	10	2540-01-188-3675	235	9
2510-01-187-7031	182	7	2930-01-188-3682	30	18
2510-01-187-7033	183	25	3040-01-188-3684	144	17
2540-01-187-7034	181	15	3040-01-188-3684	152	17
2510-01-187-7037	193	8	2530-01-188-3685	144	8
2590-01-187-7039	156	20	2530-01-188-3685	152	8
2530-01-187-7161	156	18	2940-01-188-3776	12	25
2990-01-187-7168	23	5	2920-01-188-3863	20	1
5305-01-187-8757	46	9	3020-01-188-3885	34	21
5305-01-187-8757	331	13	4720-01-188-3909	29	2
5305-01-187-8757	332	27	5315-01-188-4490	225	37
9905-01-187-9468	355	2	5315-01-188-4490	226	20
5305-01-187-9555	73	7	5340-01-188-5072	99	5
4710-01-188-0028	29	10	2590-01-188-5079	245	14
4710-01-188-0028	364	8	2590-01-188-5080	245	38
5310-01-188-0745	169	3	2590-01-188-5081	245	1
5365-01-188-0782	4	23	3120-01-188-5082	275	15
5330-01-188-0911	12	38	3120-01-188-5082	276	14
5340-01-188-1017	136	17	6140-01-188-5113	247	4
5340-01-188-1017	137	10	2940-01-188-5117	12	23
5340-01-188-1018	225	21	2520-01-188-5131	148	11

CROSS REFERENCE INDEXES

NATIONAL STOCK NUMBER INDEX

STOCK NUMBER	FIGURE NO	ITEM NO	STOCK NUMBER	FIGURE NO	ITEM NO
5305-01-188-5133	102	2	4720-01-189-2218	333	38
7690-01-188-5144	356	5	2510-01-189-3456	209	7
4710-01-188-6050	15	8	2540-01-189-3457	319	1
4710-01-188-6050	16	7	2510-01-189-3459	320	5
5310-01-188-6861	51	13	2510-01-189-3459	324	10
5310-01-188-6861	165	11	2510-01-189-3460	320	5
2510-01-188-7381	280	40	2510-01-189-3460	324	10
2510-01-188-7381	281	40	2540-01-189-3706	320	1
5340-01-188-7382	249	29	2540-01-189-3707	322	1
5340-01-188-7383	249	4	7690-01-189-3736	361	6
2590-01-188-7384	246	5	7690-01-189-3737	361	2
2590-01-188-7386	276	10	7690-01-189-3738	361	1
2590-01-188-7394	270	6	7690-01-189-3739	361	5
2520-01-188-8269	99	19	7690-01-189-3740	359	2
3040-01-188-8292	100	8	7690-01-189-3740	361	3
2530-01-188-8446	153	8	5305-01-189-3769	34	20
4710-01-188-8780	124	3	4730-01-189-4600	489	2
5305-01-188-9707	KITS	106	2910-01-189-4770	15	1
2520-01-189-0594	137	9	5977-01-189-4988	KITS	8
4710-01-189-0705	124	2	5342-01-189-5452	196	4
4710-01-189-0705	125	2	5342-01-189-5452	196	14
4720-01-189-0853	178	18	2520-01-189-6726	133	10
4730-01-189-0871	12	7	5340-01-189-6748	21	14
4330-01-189-0889	19	6	5340-01-189-7554	331	37
2510-01-189-0890	184	6	5340-01-189-7554	332	26
2510-01-189-0891	182	7	5340-01-189-7558	68	2
2530-01-189-0897	68	9	5340-01-189-7640	161	2
4330-01-189-1007	19	1	5340-01-189-7640	162	2
2520-01-189-1064	99	16	5340-01-189-7640	487A	9
2590-01-189-1067	225	53	5340-01-189-7640	487C	1
2590-01-189-1067	226	35	5340-01-189-7640	487D	5
2540-01-189-1074	185	1	5340-01-189-7739	266	19
4710-01-189-1080	124	4	5310-01-189-8468	34	4
3040-01-189-1637	138	7	5310-01-189-8476	159	9
3040-01-189-1637	145	7	5310-01-189-8476	160	5
2930-01-189-1744	34	5	5310-01-189-8476	161	10
2530-01-189-1745	184	10	5310-01-189-8476	162	16
2940-01-189-1809	12	3	5310-01-189-8476	487A	11
2510-01-189-1832	193	4	5310-01-189-8476	487D	7
4820-01-189-2107	333	37	5310-01-189-8485	165	8
3040-01-189-2134	99	24	2930-01-189-8643	34	18
2520-01-189-2135	KITS	43	2910-01-189-8851	4	11
3040-01-189-2172	133	14	4730-01-189-8854	15	12
2540-01-189-2193	191	8	4730-01-189-8854	16	11
2530-01-189-2195	170	11	2510-01-189-9717	207	1
4710-01-189-2208	161	11	2510-01-189-9720	204	11
4710-01-189-2209	161	3	9515-01-189-9721	267	12

CROSS REFERENCE INDEXES

NATIONAL STOCK NUMBER INDEX

STOCK NUMBER	FIGURE NO	ITEM NO	STOCK NUMBER	FIGURE NO	ITEM NO
2510-01-189-9724	316	7	4330-01-190-3579	KITS	5
2510-01-189-9724	320	19	2510-01-190-3862	193	4
2510-01-189-9724	324	24	5305-01-190-4073	19	2
2510-01-189-9725	316	7	5306-01-190-4553	19	3
2510-01-189-9725	320	19	5310-01-190-4607	34	15
2510-01-189-9725	324	24	5340-01-190-5100	15	28
4710-01-189-9727	273	23	5340-01-190-5100	16	38
9515-01-189-9728	205	37	5306-01-190-5760	136	2
2540-01-189-9729	204	11	5306-01-190-5760	137	14
2510-01-189-9730	204	3	5307-01-190-5854	34	12
9515-01-189-9731	267	15	5315-01-190-5908	266	20
9515-01-189-9732	267	8	5360-01-190-6214	34	11
9515-01-189-9733	267	20	5360-01-190-6218	99	15
2590-01-189-9734	273	6	2540-01-190-7079	333	11
2590-01-189-9736	274	24	5360-01-190-7234	KITS	9
2590-01-189-9736	276	21	5330-01-190-7509	KITS	42
5330-01-189-9738	23	3	5330-01-190-7510	KITS	41
5330-01-189-9738	24	15	5355-01-190-7635	99	2
2510-01-189-9741	268	16	5307-01-190-7650	103	12
5365-01-189-9743	204	4	5342-01-190-7735	103	15
2510-01-189-9744	206	17	9905-01-190-8425	354	12
9515-01-189-9745	267	19	9905-01-190-8427	354	12
9515-01-189-9746	267	19	2510-01-190-8458	204	3
2590-01-189-9747	274	14	7690-01-190-8501	359	5
2510-01-189-9748	280	40	7690-01-190-8501	360	3
2510-01-189-9748	281	40	5325-01-191-0595	194	4
2520-01-189-9750	128	4	5340-01-191-0746	15	26
2510-01-189-9828	274	1	5340-01-191-0746	16	37
2510-01-189-9828	276	25	5340-01-191-0748	15	25
5340-01-189-9979	202	15	5340-01-191-0748	16	33
3110-01-189-9980	21	22	2510-01-191-0971	204	8
5342-01-189-9982	2	7	2540-01-191-0973	452	5
5340-01-190-0333	179	18	7690-01-191-1312	359	6
5340-01-190-0333	180	28	7690-01-191-1313	359	1
5340-01-190-0402	12	29	7690-01-191-1314	359	10
5340-01-190-0807	136	1	7690-01-191-1315	359	9
5340-01-190-0807	137	13	7690-01-191-1316	359	8
5340-01-190-0810	194	5	5315-01-191-2611	133	4
5340-01-190-0815	244	19	5340-01-191-3222	203	17
2990-01-190-1089	23	15	3120-01-191-3232	99	23
2990-01-190-1089	24	24	3120-01-191-3232	133	8
5930-01-190-1231	54	9	5340-01-191-3359	206	12
5306-01-190-2193	71	4	5340-01-191-3526	15	33
5340-01-190-2248	141	18	4820-01-191-4262	172	6
5340-01-190-2248	162	1	3120-01-191-4637	KITS	109
5340-01-190-2248	181	13	7690-01-191-6467	359	7
3040-01-190-3574	138	9	2920-01-191-6534	KITS	110

CROSS REFERENCE INDEXES

NATIONAL STOCK NUMBER INDEX

STOCK NUMBER	FIGURE NO	ITEM NO	STOCK NUMBER	FIGURE NO	ITEM NO
5325-01-191-7555	208	22	2540-01-192-9711	403	5
5340-01-191-8161	170	16	2540-01-192-9712	403	1
5340-01-191-8161	195	5	2540-01-192-9712	403	6
2530-01-191-8740	KITS	71	2540-01-192-9713	403	1
2530-01-191-8741	KITS	36	2540-01-192-9713	403	6
3020-01-191-8784	148	27	2540-01-192-9714	403	21
7690-01-191-8793	359	4	2540-01-192-9715	403	21
2520-01-192-1260	109	9	2540-01-192-9716	267	7
3040-01-192-1632	230	15	2540-01-192-9718	277	21
5306-01-192-2207	169	26	4710-01-192-9720	277	15
5340-01-192-2256	443	8	2540-01-192-9721	269	10
5340-01-192-2256	457	7	2510-01-192-9723	278	4
2920-01-192-2956	KITS	107	5340-01-193-0251	15	29
2920-01-192-2959	KITS	99	5340-01-193-0251	16	41
2590-01-192-3021	314	22	2510-01-193-1807	207	1
5340-01-192-3414	182	5	6220-01-193-1970	62	14
3040-01-192-3673	488	19	5330-01-193-2338	266	9
2590-01-192-4425	399	11	2540-01-193-2711	403	22
2920-01-192-4473	KITS	108	5365-01-193-2951	169	18
2920-01-192-4474	KITS	11	9905-01-193-4065	354	5
2540-01-192-4500	199	30	9905-01-193-4065	370	20
2540-01-192-4501	403	15	5365-01-193-4479	403	20
2540-01-192-4502	399	12	5342-01-193-7088	488	14
2540-01-192-4504	269	10	5945-01-193-7175	51	5
2590-01-192-4525	277	8	4730-01-193-7390	345	12
4810-01-192-5817	177	5	4730-01-193-7390	348	17
2540-01-192-5937	277	41	2930-01-193-7802	31	3
2510-01-192-5947	199	32	5977-01-193-9931	68	11
2540-01-192-5948	267	10	2540-01-194-0197	277	26
2540-01-192-5949	277	28	2590-01-194-0309	243	6
2540-01-192-5949	278	9	2590-01-194-0309	244	5
2540-01-192-5949	440	5	2590-01-194-0309	244	13
2510-01-192-5950	270	15	5330-01-194-0472	8	9
4520-01-192-6073	343	9	5330-01-194-0473	15	11
4710-01-192-6113	277	42	5330-01-194-0473	16	10
7690-01-192-6369	361	10	5310-01-194-0481	34	3
7690-01-192-6370	361	9	5325-01-194-0562	17	3
7690-01-192-6371	359	3	5365-01-194-0761	267	16
6625-01-192-7498	69	28	5340-01-194-0887	270	7
4820-01-192-7678	399	18	5340-01-194-0887	340	5
4710-01-192-7965	268	31	5340-01-194-0888	270	27
4820-01-192-8030	399	2	2590-01-194-2048	250	22
4730-01-192-8086	141	19	2530-01-194-2049	170	10
2540-01-192-8283	270	15	5342-01-194-3128	197	13
5331-01-192-8892	34	6	5342-01-194-3128	199	54
5330-01-192-8916	203	16	2540-01-194-3323	345	1
4710-01-192-9546	268	36	2540-01-194-3323	368	19

CROSS REFERENCE INDEXES

NATIONAL STOCK NUMBER INDEX

STOCK NUMBER	FIGURE NO	ITEM NO	STOCK NUMBER	FIGURE NO	ITEM NO
5365-01-194-5093	270	18	2590-01-196-1290	325	11
5340-01-194-5294	4	14	2590-01-196-1290	376	6
4720-01-194-5334	398	32	2540-01-196-1291	321	13
5342-01-194-5806	269	30	2540-01-196-1291	376	10
5360-01-194-6070	271	4	3040-01-196-1493	281	33
5360-01-194-6070	271	21	4720-01-196-1636	27	9
5306-01-194-6433	97	5	4710-01-196-1642	3	2
5310-01-194-6459	277	36	5340-01-196-2573	403	19
6620-01-194-6586	66	11	5365-01-196-2699	243	18
2590-01-194-6979	249	37	5355-01-196-2770	133	1
2590-01-194-6980	249	30	5340-01-196-3297	267	19
2590-01-194-6981	249	5	5307-01-196-4717	4	26
2590-01-194-6990	333	35	5340-01-196-4720	188	3
5310-01-194-7066	199	56	2540-01-196-4721	188	16
5310-01-194-7066	208	7	2540-01-196-4722	188	16
5310-01-194-7066	331	34	2540-01-196-4723	188	21
4010-01-194-8546	266	8	2530-01-196-4724	208	1
4010-01-194-8546	284	5	2540-01-196-4726	12	33
5331-01-194-8966	34	10	2540-01-196-4920	188	7
5306-01-195-0277	269	17	5307-01-196-4937	142	32
5331-01-195-1500	34	9	5307-01-196-4937	143	24
5340-01-195-1575	69	3	5307-01-196-4937	150	32
5995-01-195-1918	282	1	5307-01-196-4937	151	24
6680-01-195-2146	488	11	2590-01-196-5228	4	1
5120-01-195-2721	501	4	2510-01-196-5311	203	4
4730-01-195-3803	400	7	5342-01-196-5312	209	11
3040-01-195-4173	281	33	2540-01-196-5313	225	8
5120-01-195-4551	501	11	2540-01-196-5313	325	2
5365-01-195-4949	277	5	2590-01-196-5314	321	7
5340-01-195-5397	243	19	2590-01-196-5314	325	11
5305-01-195-5818	8	14	2590-01-196-5314	376	6
5360-01-195-6200	243	25	2510-01-196-5316	280	15
5325-01-195-8002	71	6	2510-01-196-5316	281	15
5342-01-195-8039	280	15	2540-01-196-5317	280	22
5342-01-195-8039	281	15	2540-01-196-5317	281	22
5340-01-195-8057	315	2	2510-01-196-5506	280	40
5340-01-195-8837	269	22	2510-01-196-5506	281	40
5331-01-195-8889	488	18	5325-01-196-5631	245	8
5330-01-195-9049	270	24	2590-01-196-7281	BULK	43
5330-01-195-9083	268	2	5340-01-196-7733	246	26
5340-01-195-9107	280	18	5330-01-196-7968	280	26
5340-01-195-9107	281	18	5330-01-196-7969	281	26
5180-01-195-9777	500	2	5340-01-196-8028	403	17
5120-01-196-0084	501	1	5340-01-196-8158	269	23
5315-01-196-0277	277	25	5310-01-197-1100	270	36
5340-01-196-0572	277	38	5310-01-197-1161	209	1
2590-01-196-1290	321	7	5340-01-197-1238	269	5

CROSS REFERENCE INDEXES

NATIONAL STOCK NUMBER INDEX

STOCK NUMBER	FIGURE NO	ITEM NO	STOCK NUMBER	FIGURE NO	ITEM NO
5340-01-197-1294	220	2	5340-01-197-5477	198	17
5340-01-197-1294	230	20	5340-01-197-5477	321	20
5340-01-197-1294	231	25	5340-01-197-5477	325	23
5340-01-197-1294	235	16	2540-01-197-5478	324	1
5340-01-197-1444	268	12	7690-01-197-5500	356	4
5306-01-197-1492	108	1	7690-01-197-5500	357	1
5315-01-197-1494	323	9	2530-01-197-5502	490	14
5315-01-197-1494	326	8	5975-01-197-5505	409	3
5305-01-197-1594	271	2	5975-01-197-5505	411	3
5305-01-197-1594	271	19	5975-01-197-5505	430	48
2530-01-197-2160	170	17	3040-01-197-5510	368	41
2530-01-197-2160	195	6	2540-01-197-5525	325	5
5340-01-197-2382	398	28	2540-01-197-5526	326	1
5340-01-197-2438	62	24	2540-01-197-5528	375	4
5340-01-197-2642	270	25	2510-01-197-5546	375	12
5340-01-197-2716	270	29	2510-01-197-5546	378	11
5340-01-197-2717	268	7	2510-01-197-5547	375	12
5340-01-197-2736	269	18	2510-01-197-5547	378	11
5315-01-197-3122	245	5	5340-01-197-5548	37	5
5306-01-197-3274	150	27	5995-01-197-5554	82	1
5306-01-197-3277	153	10	5310-01-197-6253	254	26
5325-01-197-3460	153	22	5310-01-197-6253	287	6
5325-01-197-3460	332	21	5340-01-197-6714	281	29
5340-01-197-3461	26	9	5340-01-197-6715	245	2
5340-01-197-3478	245	19	5340-01-197-6716	245	6
5330-01-197-3620	208	31	5340-01-197-6753	268	39
2590-01-197-4898	317	6	5340-01-197-6755	277	49
2590-01-197-4898	373	5	5305-01-197-7547	68	12
2590-01-197-4899	272	37	5315-01-197-7563	275	8
2540-01-197-4900	280	22	2540-01-197-8071	374	16
2540-01-197-4900	281	22	5340-01-197-8239	269	25
5340-01-197-4901	280	9	5330-01-197-8298	268	15
2590-01-197-5446	199	49	5330-01-197-8298	295	6
2540-01-197-5447	197	7	2510-01-197-8572	246	20
2540-01-197-5448	197	2	2510-01-197-8572	253	24
2540-01-197-5449	365	6	2510-01-197-8572	254	19
2540-01-197-5450	368	4	5340-01-197-8673	216	3
9330-01-197-5458	374	13	5340-01-197-8673	252	19
2540-01-197-5460	365	23	5340-01-197-8673	253	36
2540-01-197-5463	374	20	5340-01-197-8673	266	12
5999-01-197-5465	410	KIT	5340-01-197-8673	317	10
5895-01-197-5467	412	KIT	5340-01-197-8673	321	23
5340-01-197-5469	286	4	5340-01-197-8673	323	15
5340-01-197-5470	416	5	5340-01-197-8673	326	6
2590-01-197-5474	286	39	5340-01-197-8673	377	6
2590-01-197-5475	286	39	5340-01-197-8674	228	13
2540-01-197-5476	325	15	5340-01-197-8674	248	16

CROSS REFERENCE INDEXES

NATIONAL STOCK NUMBER INDEX

STOCK NUMBER	FIGURE NO	ITEM NO	STOCK NUMBER	FIGURE NO	ITEM NO
5340-01-197-8674	429	14	5340-01-198-2248	247	17
5340-01-197-8674	440	22	5340-01-198-2248	249	39
5340-01-197-8674	446	31	5340-01-198-2249	246	16
5340-01-197-8675	280	6	5340-01-198-2253	271	30
5340-01-197-8675	281	6	5340-01-198-2253	274	16
3040-01-197-8727	272	26	5340-01-198-2254	249	24
2540-01-197-8735	323	1	5340-01-198-2255	246	10
5365-01-197-9383	280	21	5340-01-198-2255	247	20
5365-01-197-9383	281	21	5340-01-198-2255	248	11
5305-01-197-9417	463	14	5340-01-198-2255	249	14
2510-01-198-0333	398	2	5340-01-198-2256	249	43
5340-01-198-0480	75	49	5340-01-198-2257	249	45
5340-01-198-0480	77	27	2590-01-198-2895	317	6
3020-01-198-0633	35	32	2590-01-198-2895	373	5
5340-01-198-0686	375	9	5315-01-198-3346	245	12
5340-01-198-0686	375	13	5305-01-198-3385	323	2
5340-01-198-0686	378	8	5305-01-198-3385	323	7
5340-01-198-0686	378	14	5305-01-198-3385	324	22
5305-01-198-1619	324	11	5305-01-198-3385	324	34
5305-01-198-1619	324	25	5305-01-198-3385	326	2
5305-01-198-1619	375	16	5365-01-198-3399	248	12
5305-01-198-1621	272	14	5365-01-198-3400	248	21
5310-01-198-1722	53	5	5365-01-198-3401	248	18
5310-01-198-1722	277	20	5310-01-198-3428	280	27
5310-01-198-1723	225	20	5310-01-198-3428	281	27
5310-01-198-1723	246	15	5305-01-198-3440	463	7
5310-01-198-1723	251	35	5340-01-198-3457	248	13
5310-01-198-1723	252	32	5365-01-198-3463	248	17
5310-01-198-1723	253	27	5310-01-198-3487	280	13
5310-01-198-1723	254	18	5310-01-198-3487	281	13
5310-01-198-1723	255	30	5365-01-198-3505	248	22
5310-01-198-1723	263	3	5330-01-198-3521	429	27
5310-01-198-1723	264	6	5330-01-198-3521	BULK	51
5310-01-198-1723	266	11	5360-01-198-3525	280	43
5310-01-198-1723	318	6	5360-01-198-3525	281	43
5310-01-198-1723	333	27	5340-01-198-5165	246	4
5310-01-198-1723	429	16	5340-01-198-5165	450	7
5310-01-198-1723	446	21	5340-01-198-5455	269	19
5310-01-198-1723	448	6	3040-01-198-5699	99	14
5310-01-198-1723	450	6	2510-01-198-7413	225	34
5310-01-198-1724	197	4	2510-01-198-7413	226	24
5310-01-198-1724	417	8	3040-01-198-7473	273	10
5310-01-198-1724	430	18	5340-01-198-7580	280	29
5340-01-198-2240	280	8	2540-01-198-7581	281	29
5340-01-198-2240	281	8	5120-01-198-7583	499	4
5340-01-198-2241	280	8	5310-01-198-7585	167	7
5340-01-198-2241	281	8	5310-01-198-7585	167	20

CROSS REFERENCE INDEXES

NATIONAL STOCK NUMBER INDEX

STOCK NUMBER	FIGURE NO	ITEM NO	STOCK NUMBER	FIGURE NO	ITEM NO
5330-01-198-8789	280	26	5340-01-199-9679	326	9
5306-01-199-1314	270	3	5330-01-200-0466	23	13
2510-01-199-1498	280	9	5330-01-200-0466	24	21
2510-01-199-1499	280	32	5330-01-200-0466	398	24
2510-01-199-1499	281	32	1015-01-200-0869	250	17
5340-01-199-1662	268	14	1015-01-200-0869	252	6
5340-01-199-1663	246	3	6220-01-200-0897	197	17
5325-01-199-2254	322	6	6220-01-200-0897	199	51
5325-01-199-2254	324	6	3040-01-200-1015	280	33
5310-01-199-2293	227	32	2540-01-200-1994	316	9
5310-01-199-2293	377	2	2540-01-200-1994	320	9
2910-01-199-2355	10	2	2540-01-200-1994	320	21
9905-01-199-2371	367	2	2540-01-200-1994	324	12
2540-01-199-2390	378	KITS	2540-01-200-1994	324	26
2540-01-199-2396	366	2	2540-01-200-1994	375	17
5305-01-199-3371	266	13	2540-01-200-1994	378	17
5305-01-199-3371	317	9	2540-01-200-1995	316	14
5305-01-199-3371	318	5	2540-01-200-1995	320	12
5310-01-199-3440	209	4	2540-01-200-1995	320	24
5310-01-199-3440	225	40	2540-01-200-1995	324	19
5340-01-199-3495	245	31	2540-01-200-1995	324	31
5340-01-199-3498	280	6	2540-01-200-1995	375	22
5340-01-199-3498	281	6	2540-01-200-1995	378	22
5340-01-199-3499	272	21	2520-01-200-3096	136	16
5340-01-199-3510	375	26	2520-01-200-3097	136	6
5340-01-199-4989	272	30	3120-01-200-4105	268	34
2590-01-199-5423	21	15	4730-01-200-4277	141	9
2590-01-199-5425	285	1	4730-01-200-4277	399	20
4720-01-199-5717	BULK	7	2540-01-200-6611	318	1
2510-01-199-5748	321	17	2540-01-200-8393	316	4
2510-01-199-5748	446	5	2540-01-201-2356	281	9
2510-01-199-5748	446	22	2540-01-201-2357	281	9
2510-01-199-5748	448	5	5315-01-201-3592	169	5
2540-01-199-5812	280	29	5995-01-201-4128	410	3
5340-01-199-6103	269	19	5995-01-201-4128	412	3
2540-01-199-6759	317	1	5995-01-201-4129	410	2
2540-01-199-6759	321	2	5995-01-201-4129	412	2
2540-01-199-6759	376	1	5365-01-201-4749	280	5
2540-01-199-6760	318	2	5365-01-201-4749	281	5
2540-01-199-6760	389	6	5180-01-201-4978	504	10
2540-01-199-6761	318	3	5995-01-201-7495	410	1
2540-01-199-7778	327	5	5995-01-201-7495	412	1
2590-01-199-7977	248	24	5120-01-201-7857	501	20
5340-01-199-8258	247	19	5306-01-201-7969	133	6
5930-01-199-8853	66	3	1640-01-201-9062	311	8
5930-01-199-8853	66A	5	1640-01-201-9062	312	4
5340-01-199-9679	323	10	5340-01-201-9076	280	6

CROSS REFERENCE INDEXES

NATIONAL STOCK NUMBER INDEX

STOCK NUMBER	FIGURE NO	ITEM NO	STOCK NUMBER	FIGURE NO	ITEM NO
5340-01-201-9076	281	6	5340-01-203-2708	446	23
5305-01-202-2676	155	16	5340-01-203-2708	449	5
5340-01-202-7445	323	3	5340-01-203-2821	331	36
5340-01-202-7445	326	3	5342-01-203-2822	198	23
4710-01-202-8245	400	1	5342-01-203-2822	280	48
5330-01-202-8360	273	20	5342-01-203-2822	281	48
2540-01-202-8545	409	11	5342-01-203-2822	321	27
2540-01-202-8545	411	15	5342-01-203-2822	377	10
2540-01-202-8545	415	17	5310-01-203-3217	280	20
2590-01-202-8546	409	6	5310-01-203-3217	281	20
2590-01-202-8546	411	12	5310-01-203-3217	429	3
2590-01-202-8546	415	11	5310-01-203-3217	430	3
2540-01-202-8547	208	16	5310-01-203-3217	430	22
2540-01-202-8548	411	8	5310-01-203-3217	430	39
4931-01-202-8692	213	13	5310-01-203-3230	273	9
4931-01-202-8692	214	7	5340-01-203-3273	209	2
4931-01-202-8692	252	24	5340-01-203-4646	247	27
4931-01-202-8692	254	23	5340-01-203-5629	245	3
4931-01-202-8692	267	11	5340-01-203-5630	245	7
4931-01-202-8692	342	6	5340-01-203-5634	243	10
4931-01-202-8692	401	18	5340-01-203-5634	270	38
4931-01-202-8692	446	24	5342-01-203-5661	174	3
4931-01-202-8692	498	19	2530-01-203-5662	142	18
7690-01-203-0161	361	4	2530-01-203-5662	150	18
2540-01-203-0183	230	18	2530-01-203-5663	142	33
2540-01-203-0183	235	10	2530-01-203-5663	150	33
5340-01-203-0324	280	18	2540-01-203-5664	184	18
5340-01-203-0324	281	18	2530-01-203-5746	142	1
4010-01-203-0411	243	17	2530-01-203-5746	150	1
4010-01-203-0412	270	4	5340-01-203-6538	249	28
4710-01-203-0607	334	14	5340-01-203-6539	248	1
4710-01-203-0607	366	19	5340-01-203-6542	319	6
4710-01-203-0607	386	5	5340-01-203-6542	320	4
4710-01-203-0608	334	18	5340-01-203-6542	322	5
4710-01-203-0608	366	23	5340-01-203-6542	323	4
4710-01-203-0608	384	1	5340-01-203-6542	324	5
4710-01-203-0615	334	13	5340-01-203-6542	326	4
4710-01-203-0615	386	4	5340-01-203-6542	375	7
4730-01-203-1025	385	8	5330-01-203-6551	142	2
4710-01-203-1304	368	28	5330-01-203-6551	143	2
5340-01-203-1980	197	18	5330-01-203-6551	150	2
5340-01-203-1980	199	61	5330-01-203-6551	151	2
5340-01-203-1980	227	8	2540-01-203-7721	316	9
6210-01-203-2101	367	4	2540-01-203-7721	320	9
5306-01-203-2637	313	21	2540-01-203-7721	320	21
5340-01-203-2707	248	8	2540-01-203-7721	324	12
5340-01-203-2708	247	28	2540-01-203-7721	324	26

CROSS REFERENCE INDEXES

NATIONAL STOCK NUMBER INDEX

STOCK NUMBER	FIGURE NO	ITEM NO	STOCK NUMBER	FIGURE NO	ITEM NO
2540-01-203-7721	375	17	5340-01-204-3862	321	4
2540-01-203-7721	378	17	5340-01-204-3862	325	7
4720-01-203-7789	12	8	5340-01-204-3862	373	2
5305-01-203-8346	317	4	5340-01-204-3862	376	3
5305-01-203-8346	321	5	5340-01-204-3903	334	3
5305-01-203-8346	325	8	5340-01-204-3903	366	27
5315-01-203-8543	280	41	5340-01-204-3903	384	12
5315-01-203-8543	281	41	5340-01-204-3904	368	21
5340-01-203-8608	225	4	5305-01-204-4190	275	17
5340-01-203-8608	226	38	5305-01-204-4190	276	16
5340-01-203-8674	274	29	4730-01-204-5457	368	29
5340-01-203-8675	272	20	5305-01-204-6502	25	5
5340-01-203-8675	280	17	5305-01-204-6502	51	6
5340-01-203-8675	281	17	5305-01-204-6502	83	6
5330-01-203-9187	368	1	5305-01-204-6502	84	1
5340-01-203-9391	278	15	5305-01-204-6502	85	25
3130-01-203-9870	136	12	5305-01-204-6502	335	6
2520-01-203-9871	131	4	5310-01-204-6745	490	12
2540-01-203-9872	278	6	2520-01-204-7699	97	1
2510-01-203-9873	278	14	9905-01-204-7776	354	9
2590-01-203-9874	283	28	7690-01-204-7785	360	1
2590-01-203-9875	283	17	7690-01-204-7847	360	2
2510-01-203-9883	184	15	7690-01-204-7849	361	7
9905-01-203-9992	354	10	7690-01-204-7850	361	8
9905-01-203-9994	354	4	3020-01-204-8132	472	22
9905-01-203-9994	370	19	5940-01-204-8830	412	8
9905-01-203-9995	354	14	5342-01-204-9610	321	26
9905-01-203-9996	354	17	5342-01-204-9610	325	24
7690-01-204-0076	354	18	5342-01-204-9610	376	16
7690-01-204-0077	354	1	2590-01-205-2506	278	13
2520-01-204-0325	132	6	2510-01-205-2507	278	5
4210-01-204-0913	241	10	5342-01-205-2519	314	26
5310-01-204-1039	73	4	5315-01-205-2988	225	36
5310-01-204-1039	434	2	5315-01-205-2988	226	19
5310-01-204-1039	435	2	5325-01-205-3203	410	36
5306-01-204-2139	280	28	5325-01-205-3203	412	12
5306-01-204-2139	281	28	5340-01-205-5118	209	2
5315-01-204-2328	280	39	5340-01-205-5377	188	20
5315-01-204-2328	281	39	5325-01-205-5378	339	5
5340-01-204-2458	280	6	5325-01-205-5378	410	31
5340-01-204-2458	281	6	5325-01-205-5378	412	24
5340-01-204-2543	272	36	5975-01-205-5379	313	7
2530-01-204-2583	158	2	5975-01-205-5379	333	32
5340-01-204-2584	183	11	5975-01-205-5379	339	13
5310-01-204-3344	213	25	5975-01-205-5379	410	28
5310-01-204-3344	214	20	5975-01-205-5379	443	6
5340-01-204-3862	317	3	5975-01-205-5379	485	9

CROSS REFERENCE INDEXES

NATIONAL STOCK NUMBER INDEX

STOCK NUMBER	FIGURE NO	ITEM NO	STOCK NUMBER	FIGURE NO	ITEM NO
5342-01-205-5381	77	26	5305-01-206-7217	324	33
5325-01-205-5966	129	11	5305-01-206-7217	375	20
2990-01-205-5981	45	2	5305-01-206-7219	13	8
5305-01-205-6048	167	9	5305-01-206-7219	14	14
2510-01-205-6089	195	3	5305-01-206-7219	17	15
2920-01-205-8605	KITS	1	5305-01-206-7219	88	35
2590-01-205-8607	273	21	5310-01-206-7306	1	4
9905-01-205-8635	354	15	5310-01-206-7306	2	5
9905-01-205-8635	399	1	5310-01-206-7306	12	19
2920-01-205-8653	43	38	5310-01-206-7306	30	8
5340-01-205-9021	316	17	5310-01-206-7306	33	11
5340-01-205-9021	320	13	5310-01-206-7306	35	26
5340-01-205-9021	320	25	5310-01-206-7306	36	19
5340-01-205-9021	324	23	5310-01-206-7306	37	14
5340-01-205-9021	324	35	5310-01-206-7306	38	19
5340-01-205-9021	375	24	5310-01-206-7306	41	12
5340-01-205-9021	378	24	5310-01-206-7306	42	10
5340-01-205-9022	316	17	5310-01-206-7306	66	7
5340-01-205-9022	320	13	5310-01-206-7306	75	31
5340-01-205-9022	320	25	5310-01-206-7306	77	9
5340-01-205-9022	324	23	5310-01-206-7306	174	2
5340-01-205-9022	324	35	5310-01-206-7306	33A	9
5340-01-205-9022	375	24	5310-01-206-7306	364	6
5340-01-205-9022	378	24	5310-01-206-7306	379	37
5310-01-205-9056	316	13	5310-01-206-7306	472	2
5310-01-205-9056	320	11	5310-01-206-7306	473	10
5310-01-205-9056	320	23	5310-01-206-7306	474	4
5310-01-205-9056	324	18	5310-01-206-7306	475	14
5310-01-205-9056	324	30	5310-01-206-7306	476	16
5310-01-205-9056	378	21	5310-01-206-7306	480	8
2530-01-206-3874	KITS	4	5310-01-206-7306	490	7
2520-01-206-3875	128	69	5310-01-206-7306	490A	6
3040-01-206-3876	128	15	5365-01-206-7486	72	7
2520-01-206-3877	128	9	5340-01-206-7780	241	1
2540-01-206-4115	317	2	5305-01-206-8401	75	28
2540-01-206-4115	321	3	5305-01-206-8401	77	12
2540-01-206-4115	373	1	5305-01-206-8401	84	16
2540-01-206-4115	376	2	5305-01-206-8401	88	12
5340-01-206-5040	240	21	5305-01-206-8401	477	1
5340-01-206-5040	243	22	5340-01-207-0379	199	24
5310-01-206-5479	365	18	5340-01-207-0610	241	2
5340-01-206-5540	75	41	5340-01-207-0717	198	24
5315-01-206-7135	293	34	5340-01-207-0717	321	33
5306-01-206-7172	66	8	5340-01-207-0717	325	28
5306-01-206-7172	77	24	5340-01-207-0717	373	10
5306-01-206-7172	79	18	5975-01-207-1706	75	14
5305-01-206-7217	324	21	2590-01-207-3696	173	2

CROSS REFERENCE INDEXES

NATIONAL STOCK NUMBER INDEX

STOCK NUMBER	FIGURE NO	ITEM NO	STOCK NUMBER	FIGURE NO	ITEM NO
2530-01-207-6256	158	2	5330-01-209-5997	225	54
9905-01-207-6304	133	2	2590-01-209-6041	226	34
5306-01-207-7487	374	7	2590-01-209-6042	226	35
6150-01-207-8120	416	9	2590-01-209-6043	226	26
6150-01-207-8120	426	16	2540-01-209-6049	271	3
6150-01-207-8120	427	16	2540-01-209-6049	271	20
6150-01-207-8120	428	9	4710-01-209-6746	398	14
5307-01-207-9004	31	9	2540-01-209-6838	315	1
5305-01-208-0274	325	10	5340-01-209-6874	315	4
6210-01-208-4790	47	1	2540-01-209-6875	284	16
5310-01-208-5252	374	23	2540-01-209-6875	439	9
5325-01-208-5424	410	10	4030-01-209-7047	314	20
5325-01-208-5424	414	8	5340-01-209-7386	411	17
5325-01-208-5424	416	8	5340-01-209-7387	75	34
5310-01-208-7576	410	15	5340-01-209-7387	77	15
5310-01-208-7576	414	10	5305-01-209-7667	128	12
5310-01-208-7576	416	13	5305-01-209-7668	128	17
5310-01-208-7576	425	11	5305-01-209-7668	130	26
5310-01-208-7576	426	11	5330-01-209-7669	45	3
5310-01-208-7576	427	12	5310-01-209-7702	225	39
5310-01-208-7576	428	13	5310-01-209-7702	231	21
5340-01-208-7670	321	26	5365-01-209-7713	128	71
5340-01-208-7670	325	24	5360-01-209-7715	121	13
5340-01-208-7670	376	16	5330-01-209-7723	169	24
5340-01-208-8688	12	32	5331-01-209-7726	131	3
5975-01-208-9618	41	8	5340-01-209-7761	250	3
5975-01-208-9618	44	22	5340-01-209-7767	149	10
5975-01-208-9618	44	27	5340-01-209-7767	183	26
5975-01-208-9618	474	15	5340-01-209-7767	184	12
5975-01-208-9618	480	18	5340-01-209-7794	51	7
5975-01-208-9618	480	30	5340-01-209-7795	159	13
2510-01-209-0502	202	21	5340-01-209-7796	161	1
4910-01-209-0729	500	6	5340-01-209-7799	85	27
4730-01-209-0845	135	4	5340-01-209-7799	88	8
7690-01-209-0864	356	1	5340-01-209-7802	196	9
2510-01-209-1881	227	12	5340-01-209-7802	196	14
3040-01-209-3376	314	28	5340-01-209-7807	153	19
3040-01-209-3409	314	36	5340-01-209-7808	149	13
2510-01-209-3450	280	40	5330-01-209-7817	331	11
2510-01-209-3450	281	40	5340-01-209-7830	121	14
2540-01-209-4590	202	24	5365-01-209-7831	181	5
3020-01-209-4603	314	4	5365-01-209-7831	184	9
3020-01-209-4606	314	5	5365-01-209-7832	181	5
4710-01-209-4628	178	8	5365-01-209-7832	184	9
5340-01-209-4870	280	11	5340-01-209-7834	203	28
5340-01-209-4870	281	11	5330-01-209-7842	331	16
5935-01-209-5594	79	3	5325-01-209-7843	333	25

CROSS REFERENCE INDEXES

NATIONAL STOCK NUMBER INDEX

STOCK NUMBER	FIGURE NO	ITEM NO	STOCK NUMBER	FIGURE NO	ITEM NO
5325-01-209-7843	372	4	5365-01-210-4903	44	1
2590-01-210-0176	250	2	5305-01-210-4967	314	25
2990-01-210-0427	25	4	4730-01-210-5785	12	35
4720-01-210-0484	7	9	2910-01-210-5872	18	1
4030-01-210-0691	314	16	2590-01-210-6202	268	30
5340-01-210-0692	17	18	5305-01-210-6248	314	21
5310-01-210-0819	39	55	5305-01-210-6249	321	1
5945-01-210-1299	45	20	5305-01-210-6249	325	1
4910-01-210-1318	499	6	5305-01-210-6251	15	34
2530-01-210-1324	144	11	2910-01-210-6856	13	20
2530-01-210-1324	152	11	2510-01-210-6939	28	1
2540-01-210-1325	331	14	2930-01-210-6940	26	3
3020-01-210-1365	314	33	2510-01-210-6941	183	15
3020-01-210-1391	174	11	2510-01-210-6942	184	16
5365-01-210-1584	206	26	2990-01-210-6982	25	3
5310-01-210-1587	37	13	5310-01-210-7935	224	6
5310-01-210-1587	472	3	5310-01-210-7938	202	40
5310-01-210-1587	473	11	5340-01-210-7966	181	12
5310-01-210-1587	474	3	5120-01-210-8793	499	2
5310-01-210-1587	475	16	5310-01-211-0691	284	17
5310-01-210-1587	476	22	5310-01-211-0691	439	10
5340-01-210-1606	240	17	5310-01-211-0698	283	2
5365-01-210-1628	184	8	5310-01-211-0698	438	2
5365-01-210-1629	203	7	5330-01-211-0717	314	3
5365-01-210-1630	203	27	5340-01-211-0838	277	29
5325-01-210-1633	84	6	5340-01-211-0838	278	8
2990-01-210-2176	398	19	5340-01-211-0838	440	4
5305-01-210-2309	313	19	4730-01-211-0896	18	7
5305-01-210-2309	458	42	5330-01-211-1343	156	9
2520-01-210-2624	148	21	5305-01-211-1405	198	13
5340-01-210-2747	5	15	5305-01-211-1439	47	3
2510-01-210-2748	331	15	5305-01-211-1450	13	4
2540-01-210-2749	268	13	5305-01-211-1450	14	4
2540-01-210-2787	208	33	5305-01-211-1450	16	24
5360-01-210-2852	22	3	5305-01-211-1470	208	34
5325-01-210-2870	15	5	5340-01-211-1645	280	52
5325-01-210-2870	16	5	4720-01-211-1998	364	4
4820-01-210-3488	15	4	4720-01-211-1998	379	40
4820-01-210-3488	16	4	5342-01-211-2897	7	4
4710-01-210-3503	333	7	5305-01-211-3100	314	14
4710-01-210-3504	333	5	5305-01-211-3101	314	1
2520-01-210-3506	99	19	5340-01-211-3132	202	14
2530-01-210-3567	182	9	5340-01-211-3137	23	20
5995-01-210-3594	81	2	5340-01-211-3137	24	17
6150-01-210-3596	327	16	5975-01-211-3142	17	13
2990-01-210-4276	28	1	5975-01-211-3142	153	18
5340-01-210-4751	240	9	5975-01-211-3142	379	48

CROSS REFERENCE INDEXES

NATIONAL STOCK NUMBER INDEX

STOCK NUMBER	FIGURE NO	ITEM NO	STOCK NUMBER	FIGURE NO	ITEM NO
5360-01-211-3163	314	39	5340-01-212-4716	77	10
2510-01-211-3229	280	33	5365-01-212-4736	202	19
5305-01-211-3786	95	34	5340-01-212-4887	23	9
5310-01-211-3811	24	19	5340-01-212-4887	24	6
5310-01-211-3811	25	6	2590-01-212-4955	153	15
5310-01-211-3811	175	5	2590-01-212-4956	333	36
5340-01-211-4025	23	12	2540-01-212-4959	327	2
2920-01-211-4935	45	79	2920-01-212-4976	45	67
5310-01-211-5037	12	26	2540-01-212-5814	202	20
5365-01-211-5063	62	12	2540-01-212-5815	331	27
5340-01-211-5083	274	31	2920-01-212-5816	43	50
5365-01-211-5094	177	15	2920-01-212-5817	43	52
5342-01-211-5327	45	60	2920-01-212-5817	43	53
4530-01-211-5328	250	4	2590-01-212-5868	488	1
5340-01-211-5593	327	7	4720-01-212-6403	333	26
5330-01-211-5856	47	5	4820-01-212-6763	121	10
5305-01-211-6049	49	3	2520-01-212-7634	104	9
5365-01-211-6083	246	25	5340-01-212-7711	182	10
5340-01-211-6288	272	13	4720-01-212-8269	17	17
6105-01-211-6635	333	12	5935-01-212-9631	84	7
5355-01-211-6991	314	37	5330-01-213-1312	BULK	54
5355-01-211-6991	458	6	5310-01-213-1333	269	21
6210-01-211-7024	47	13	4720-01-213-1574	178	11
5305-01-211-7415	357	5	2590-01-213-1628	283	25
5340-01-211-7436	203	13	2590-01-213-1628	438	21
5305-01-211-7478	170	15	2590-01-213-1629	283	19
5305-01-211-7478	195	4	2590-01-213-1629	438	15
5340-01-211-7562	153	23	5305-01-213-4149	171	5
4140-01-211-8403	32	1	5310-01-213-4174	314	34
2990-01-211-8587	23	16	5310-01-213-4185	142	20
2990-01-211-8587	24	20	5310-01-213-4185	143	27
5365-01-212-0144	272	32	5310-01-213-4185	150	20
2590-01-212-1057	268	30	5310-01-213-4185	151	27
5310-01-212-2213	170	19	5310-01-213-4192	205	15
5310-01-212-2213	195	8	5310-01-213-4192	250	15
5310-01-212-2303	277	27	5365-01-213-4239	225	24
5365-01-212-2325	202	31	5365-01-213-4239	226	11
5325-01-212-2403	138	6	5340-01-213-4267	240	17
5325-01-212-2403	145	6	5340-01-213-4662	80	15
5340-01-212-2407	83	14	5340-01-213-4662	203	15
5930-01-212-3373	67	6	5340-01-213-4662	204	13
4720-01-212-3531	177	9	5340-01-213-4665	83	12
5340-01-212-3553	23	6	5340-01-213-4665	88	34
5340-01-212-3553	24	23	5340-01-213-4667	75	48
5340-01-212-3709	28	6	5340-01-213-4667	77	25
5340-01-212-4714	5	14	5305-01-213-5024	332	17
5340-01-212-4716	75	30	5315-01-213-5545	202	23

CROSS REFERENCE INDEXES

NATIONAL STOCK NUMBER INDEX

STOCK NUMBER	FIGURE NO	ITEM NO	STOCK NUMBER	FIGURE NO	ITEM NO
5340-01-213-5600	153	9	5985-01-215-9404	410	6
5340-01-213-5735	202	2	5985-01-215-9404	414	5
5340-01-213-5735	218	7	5985-01-215-9404	428	5
5340-01-213-5735	253	35	5330-01-216-0288	314	11
5365-01-213-5739	398	20	5365-01-216-0364	277	30
2540-01-213-8057	283	1	5365-01-216-0364	278	7
2540-01-213-8057	438	1	5365-01-216-0364	440	3
5365-01-214-0006	246	30	5365-01-216-1166	314	10
2590-01-214-1566	315	7	6220-01-216-5285	64	5
2590-01-214-1566	444	4	2540-01-216-6320	226	35
2540-01-214-1568	327	6	5310-01-216-7390	44	5
5340-01-214-1778	247	25	5310-01-216-7390	209	14
5340-01-214-2089	181	1	5310-01-216-7390	443	13
2520-01-214-2565	169	17	5310-01-216-7390	457	11
5340-01-214-3615	333	6	5331-01-216-7392	488	3
5360-01-214-3695	153	14	5331-01-216-7393	488	4
5340-01-214-3712	83	7	5180-01-216-8643	502	7
5940-01-214-4563	79	10	6695-01-216-8687	64	9
5340-01-214-4675	283	9	5935-01-216-8763	76	9
5340-01-214-4675	438	10	6220-01-216-9337	64	6
5310-01-214-4955	45	50	5310-01-217-0715	279	34
5365-01-214-4987	196	11	5340-01-217-2576	286	26
5340-01-214-4992	271	6	2590-01-217-2662	64	24
5340-01-214-4992	271	23	2590-01-217-2662	81	14
5340-01-214-4992	296	6	2510-01-217-2663	286	33
5325-01-214-5007	327	19	2510-01-217-2664	286	33
4720-01-214-5757	12	39	2590-01-217-2665	286	23
5310-01-214-7784	45	44	2540-01-217-2666	286	20
5310-01-214-7785	43	30	5340-01-217-2667	286	26
5970-01-214-7806	43	42	2540-01-217-2669	21	20
5342-01-214-7809	284	15	5970-01-217-4566	43	41
5342-01-214-7809	439	8	5310-01-217-5205	85	5
5325-01-214-7817	80	11	5310-01-217-5205	88	3
5305-01-215-3985	43	32	5310-01-217-5205	203	30
5305-01-215-3990	83	13	5310-01-217-5205	272	5
2590-01-215-4325	181	6	5310-01-217-5205	486	2
5305-01-215-5174	3	1	2590-01-217-5743	286	1
5305-01-215-5174	75	40	4010-01-217-7086	284	3
5305-01-215-5174	77	21	4010-01-217-7086	439	3
5305-01-215-5174	479	1	4710-01-217-9959	286	22
5310-01-215-5356	199	31	5320-01-218-0721	31	6
5310-01-215-5356	331	18	5315-01-218-1114	245	40
5310-01-215-5356	332	25	5330-01-218-1196	64	7
5310-01-215-5356	347	7	5305-01-218-1243	64	10
5340-01-215-5478	333	30	5360-01-218-1608	286	3
4010-01-215-7466	284	3	5910-01-218-1675	43	46
4010-01-215-7466	439	3	5310-01-218-3190	202	9

CROSS REFERENCE INDEXES

NATIONAL STOCK NUMBER INDEX

STOCK NUMBER	FIGURE NO	ITEM NO	STOCK NUMBER	FIGURE NO	ITEM NO
5310-01-218-3190	252	29	5310-01-232-1361	40	30
2910-01-218-4489	KITS	3	5310-01-232-1362	40	40
4010-01-218-4639	284	7	5310-01-232-1363	43B	9
4010-01-218-4640	284	9	5310-01-232-6617	43B	8
5320-01-218-5802	286	30	2590-01-232-8210	286	42
5310-01-218-7137	457	10	3020-01-232-9629	37	20
2930-01-218-8103	26	3	3020-01-232-9629	475	28
5120-01-218-8235	502	5	2510-01-233-1141	225	12
5365-01-218-9848	285	12	5340-01-233-1461	240	14
5365-01-218-9914	285	8	2510-01-233-7767	226	4
5365-01-218-9914	285	11	5310-01-234-9415	88	16
5365-01-219-3528	191	3	5310-01-234-9416	35	14
5977-01-219-7042	43	40	5310-01-234-9416	37	7
5320-01-219-7261	286	6	5310-01-234-9416	52	11
5320-01-219-7261	286	15	5310-01-234-9416	56	8
5340-01-219-7541	64	3	5310-01-234-9416	59	16
5340-01-220-3084	205	10	5310-01-234-9416	234	16
5310-01-220-3099	286	11	5310-01-234-9416	246	32
5320-01-221-4231	274	30	5310-01-234-9416	247	23
5305-01-221-7734	286	2	5310-01-234-9416	249	44
5820-01-222-1106	416	KIT	5310-01-234-9416	260	7
5820-01-222-1107	414	KIT	5310-01-234-9416	269	3
2920-01-222-2183	KITS	69	5310-01-234-9416	284	14
2540-01-223-3749	240	8	5310-01-234-9416	298	8
5306-01-223-4345	40	39	5310-01-234-9416	307	12
5320-01-223-7728	298	7	5310-01-234-9416	321	16
5935-01-223-9420	74	12	5310-01-234-9416	327	36
5305-01-224-1449	286	5	5310-01-234-9416	327	42
9905-01-224-5860	354	8	2590-01-235-8661	243	5
5310-01-225-0701	40	3	2590-01-235-8661	244	2
5365-01-225-0844	40	35	2590-01-235-8661	244	14
5120-01-227-1680	501	13	2530-01-235-8688	167	12
5120-01-227-3159	505	3	5305-01-236-4349	123	2
5310-01-228-3299	286	21	5305-01-236-4349	124	14
5120-01-229-0842	503	3	5305-01-236-4349	125	14
5340-01-229-3632	5	5	5340-01-236-5101	345	32
5305-01-229-7855	327	3	5340-01-236-5101	348	23
5306-01-230-3354	4	21	2510-01-236-6488	278	4
5310-01-231-0596	142	6	2540-01-236-6489	278	4
5310-01-231-0596	143	6	5930-01-237-7322	66	1
5310-01-231-0596	150	6	5970-01-238-0146	43	28
5310-01-231-0596	151	6	5935-01-238-0543	84	13
4910-01-231-1709	504	1	5935-01-238-0543	86	21
4910-01-231-3671	499	7	4910-01-238-2551	505	14
8145-01-231-3747	363	1	5330-01-238-3217	275	24
4010-01-231-5075	314	17	5340-01-238-9543	398	5
5310-01-231-7455	398	6	4730-01-239-5251	301	3

CROSS REFERENCE INDEXES

NATIONAL STOCK NUMBER INDEX

STOCK NUMBER	FIGURE NO	ITEM NO	STOCK NUMBER	FIGURE NO	ITEM NO
4730-01-239-5251	303	12	2590-01-247-7923	255	8
5340-01-242-6245	235	14	2590-01-247-7924	255	22
5325-01-242-7083	333	10	2510-01-247-7968	226	4
5325-01-242-7083	367	10	5330-01-247-8438	34	7
5305-01-243-3759	476	17	9905-01-248-1111	355	4
5306-01-243-4650	175	2	9905-01-248-1112	355	4
3040-01-244-3646	488	17	9905-01-248-1113	355	4
2920-01-244-4993	43	1	9905-01-248-1114	355	4
5340-01-244-5765	15	15	9905-01-248-1115	355	4
5340-01-244-5765	180	2	2510-01-248-1340	208	19
5306-01-244-7882	440	1	2920-01-248-2509	43	5
2520-01-244-9863	100	1	2590-01-248-2531	251	12
5342-01-246-1120	17	1	5340-01-248-2878	59	15
5330-01-246-1822	12	14	2530-01-248-4873	184	18
5330-01-246-1822	364	2	2590-01-248-4874	251	11
5365-01-246-8281	205	18	7690-01-248-4907	430	28
5340-01-246-8282	197	31	7690-01-248-4908	430	43
2540-01-246-8283	242	1	7690-01-248-4909	430	45
2540-01-246-8284	243	4	5340-01-248-7621	243	31
2540-01-246-8285	244	1	5340-01-248-7621	244	15
2540-01-246-8286	244	4	2590-01-248-7622	251	33
2510-01-246-8287	452	3	2590-01-248-7623	251	34
2590-01-246-8288	226	3	5340-01-248-7646	199	43
2540-01-246-8289	226	1	5340-01-248-7649	430	36
5340-01-246-8290	246	34	9905-01-248-7656	370	13
2590-01-246-8291	249	13	9905-01-248-7657	354	7
2540-01-246-8292	251	22	7690-01-248-7679	429	28
2540-01-246-8292	254	3	7690-01-248-7680	429	33
5340-01-246-8293	251	37	7690-01-248-7681	429	39
2590-01-246-8294	252	36	7690-01-248-7682	430	24
2590-01-246-8294	253	3	7690-01-248-7683	430	46
2590-01-246-8294	255	3	2510-01-248-8875	47	6
5355-01-247-3593	331	28	2590-01-248-9531	286	40
5120-01-247-6629	501	7	2590-01-248-9536	286	40
4730-01-247-6763	150	5	9905-01-248-9543	355	4
2590-01-247-7910	199	7	9905-01-248-9544	355	4
5340-01-247-7911	242	9	9905-01-248-9545	355	4
5340-01-247-7912	226	10	9905-01-248-9546	355	4
2540-01-247-7914	208	38	9905-01-248-9547	355	4
2540-01-247-7915	208	38	9905-01-248-9548	355	4
1005-01-247-7916	251	6	9905-01-248-9549	355	4
1010-01-247-7917	251	8	9905-01-248-9550	356	2
5340-01-247-7918	252	25	9905-01-248-9551	356	6
5340-01-247-7919	252	30	9905-01-248-9552	355	4
2590-01-247-7920	255	34	2510-01-248-9557	268	3
5340-01-247-7921	251	13	5210-01-249-0369	510	22
5340-01-247-7922	252	15	5315-01-249-0555	437	2

CROSS REFERENCE INDEXES

NATIONAL STOCK NUMBER INDEX

STOCK NUMBER	FIGURE NO	ITEM NO	STOCK NUMBER	FIGURE NO	ITEM NO
5310-01-249-0899	398	1	2510-01-250-7593	227	26
5310-01-249-0904	461	5	2510-01-250-7594	227	26
2520-01-249-1434	97	8	2510-01-250-7595	227	25
2520-01-249-1434	101	10	2510-01-250-7596	227	2
3040-01-249-1435	99	9	2510-01-250-7597	227	1
2520-01-249-1506	137	17	5310-01-250-7679	4	20
5340-01-249-1575	179	16	2510-01-250-7786	268	3
5340-01-249-1576	179	5	5310-01-250-7835	26	10
2530-01-249-1577	170	2	5310-01-250-7844	45	29
2590-01-249-1578	244	12	5310-01-251-0711	49	9
2590-01-249-1579	255	13	5310-01-251-0711	333	2
2510-01-249-1580	268	20	5340-01-251-0724	28	3
2510-01-249-1581	268	21	5305-01-251-0728	249	23
2510-01-249-1582	268	21	5305-01-251-0728	253	25
2510-01-249-1583	268	22	5305-01-251-0728	256	6
2540-01-249-1584	279	1	5305-01-251-0728	257	9
2510-01-249-1585	272	1	5305-01-251-0728	259	10
2510-01-249-1586	272	1	5305-01-251-0728	262	3
5340-01-249-1587	275	25	5305-01-251-0728	263	6
2590-01-249-1588	286	18	5305-01-251-0728	264	2
2540-01-249-1589	413	7	5305-01-251-0728	265	2
5340-01-249-1590	415	7	3120-01-251-0735	133	13
9515-01-249-1591	429	7	5310-01-251-0748	58	8
2540-01-249-1592	429	8	5310-01-251-0748	99	8
2540-01-249-1593	429	19	5310-01-251-0748	208	15
5340-01-249-1594	429	21	5310-01-251-0748	252	2
2540-01-249-1595	429	30	5310-01-251-0748	334	4
2590-01-249-1596	430	1	5310-01-251-0748	338	20
2540-01-249-1597	430	4	5310-01-251-0748	339	15
2540-01-249-1598	430	30	5310-01-251-0748	417	2
2510-01-249-1599	179	2	5310-01-251-0748	418	2
9905-01-249-1612	354	19	5310-01-251-0748	419	2
2920-01-249-3492	99	20	5310-01-251-0748	420	7
5342-01-249-3502	208	32	5310-01-251-0748	421	4
5342-01-249-5389	208	32	5310-01-251-0748	422	6
5342-01-250-1098	10	13	5310-01-251-0748	423	10
7690-01-250-1101	430	47	5310-01-251-0748	425	2
5305-01-250-6582	57	8	5310-01-251-0748	426	4
5305-01-250-6583	46	22	5310-01-251-0748	427	3
5305-01-250-6584	55	4	5340-01-251-0754	84	20
5305-01-250-6584	56	2	5310-01-251-0760	62	13
5310-01-250-6587	59	10	5330-01-251-1607	100	10
5310-01-250-6587	99	12	5330-01-251-1607	108	7
2540-01-250-7589	429	1	5306-01-251-1616	142	27
2540-01-250-7590	415	9	2590-01-251-3068	227	20
2540-01-250-7591	430	KIT	2590-01-251-3069	227	7
2540-01-250-7592	430	31	2590-01-251-3069	227	17

CROSS REFERENCE INDEXES

NATIONAL STOCK NUMBER INDEX

STOCK NUMBER	FIGURE NO	ITEM NO	STOCK NUMBER	FIGURE NO	ITEM NO
2590-01-251-3070	227	17	5340-01-252-8537	208	24
2590-01-251-3071	227	6	5305-01-252-9108	199	36
4710-01-251-3073	227	5	5365-01-252-9214	205	11
4710-01-251-3075	227	22	5310-01-253-0058	199	58
4710-01-251-3076	268	27	5310-01-253-0060	205	8
2510-01-251-5316	193	4	5310-01-253-0060	206	28
4710-01-251-6103	227	4	5306-01-253-1611	150	36
5995-01-251-6785	416	1	5306-01-253-1612	202	34
5995-01-251-6785	428	2	5310-01-253-1615	410	16
2510-01-251-8548	227	19	5310-01-253-1618	52	31
5306-01-251-9190	75	47	5310-01-253-1618	208	27
5306-01-251-9190	174	4	5310-01-253-1618	252	5
5305-01-251-9222	104	17	5310-01-253-1618	260	11
5995-01-251-9316	414	1	5310-01-253-1618	273	13
5995-01-251-9316	416	2	5310-01-253-1618	275	12
3040-01-251-9383	230	10	5310-01-253-1618	276	8
2510-01-251-9995	227	21	5310-01-253-1618	300	13
5330-01-252-0461	34	13	5310-01-253-1618	327	29
5310-01-252-0513	241	6	4720-01-253-2809	504	3
5310-01-252-0513	249	25	4720-01-253-2810	504	5
5310-01-252-0513	272	17	2530-01-253-2825	157	16
5340-01-252-0741	245	34	2530-01-253-2825	158	11
9330-01-252-1239	487A	1	2510-01-253-2839	272	10
9330-01-252-1239	BULK	66	5305-01-253-2989	240	10
5310-01-252-2999	59	7	5305-01-253-2993	205	33
5310-01-252-2999	75	32	5305-01-253-2993	206	20
5310-01-252-2999	84	10	5305-01-253-2998	241	11
5310-01-252-2999	153	6	5985-01-253-3514	414	4
5310-01-252-2999	330	1	5985-01-253-3514	425	13
2540-01-252-3386	270	33	5340-01-253-3757	197	23
2510-01-252-4466	227	10	5340-01-253-3757	199	40
2510-01-252-4756	243	21	2590-01-253-3905	235	5
5330-01-252-5377	197	32	2510-01-253-3907	280	1
5330-01-252-5378	199	60	5306-01-253-4426	179	8
4820-01-252-6169	504	4	5340-01-253-5479	246	19
2510-01-252-6240	277	3	5340-01-253-5479	253	34
1005-01-252-6299	251	3	5340-01-253-5479	254	25
1010-01-252-6300	251	9	5340-01-253-5479	255	27
5355-01-252-6504	280	38	2540-01-253-6112	349	16
5355-01-252-6504	281	38	5310-01-253-6439	203	14
5310-01-252-7285	196	6	6680-01-253-6782	504	9
2510-01-252-7903	284	8	5306-01-253-7073	4	19
2510-01-252-7904	284	10	5340-01-253-8377	272	12
5365-01-252-8026	208	30	5310-01-253-8437	127	10
2530-01-252-8362	170	7	5310-01-253-8437	230	13
2540-01-252-8460	270	33	5310-01-253-8437	234	11
2510-01-252-8461	284	6	5310-01-253-8437	235	12

CROSS REFERENCE INDEXES

NATIONAL STOCK NUMBER INDEX

STOCK NUMBER	FIGURE NO	ITEM NO	STOCK NUMBER	FIGURE NO	ITEM NO
5310-01-253-8437	239	12	5320-01-254-2283	332	40
5310-01-253-8438	286	27	5306-01-254-2357	174	10
5310-01-253-8440	410	34	5306-01-254-2358	148	3
5310-01-253-8440	412	25	5306-01-254-2359	177	16
5310-01-253-8928	331	23	5306-01-254-2360	279	37
5340-01-253-8933	277	14	5305-01-254-2451	249	40
5310-01-253-8948	179	4	5305-01-254-2452	248	2
5310-01-253-8948	180	5	5305-01-254-2452	272	22
5310-01-253-8948	181	2	5305-01-254-2453	269	26
5310-01-253-8948	182	3	5305-01-254-2459	268	1
5310-01-253-8948	187	12	5305-01-254-2459	270	40
5310-01-253-8948	188	2	5305-01-254-2460	92	17
5310-01-253-8948	191	2	5305-01-254-2460	199	25
5310-01-253-8948	194	1	5305-01-254-2460	497	1
5310-01-253-8948	283	3	5305-01-254-2461	398	13
5310-01-253-8948	417	15	5307-01-254-2504	278	11
5310-01-253-8949	248	15	5305-01-254-2521	174	9
5310-01-253-8949	280	4	5305-01-254-2521	66A	1
5310-01-253-8949	280	53	5305-01-254-2522	230	12
5310-01-253-8949	281	4	5305-01-254-2522	238	1
5310-01-253-8949	281	53	5310-01-254-4284	280	3
5310-01-253-8949	286	17	5310-01-254-4284	281	3
5310-01-253-8952	280	12	5365-01-254-4394	277	13
5310-01-253-8952	280	37	5310-01-254-5352	46	20
5310-01-253-8952	281	12	5310-01-254-5352	208	3
5310-01-253-8952	281	37	4730-01-254-6023	504	6
5310-01-253-8953	280	19	5306-01-254-6356	171	4
5310-01-253-8953	280	35	2540-01-254-6511	370	9
5310-01-253-8953	281	19	5340-01-254-6543	140	3
5310-01-253-8953	281	35	5340-01-254-7189	316	19
5310-01-253-8953	335	12	5340-01-254-7189	320	16
5310-01-253-8953	336	9	5340-01-254-7189	320	30
5310-01-253-8957	226	22	5340-01-254-7189	324	20
5340-01-253-8971	280	2	5340-01-254-7189	324	32
5340-01-253-8971	281	2	5340-01-254-7189	378	26
5365-01-253-8975	272	11	5340-01-254-7190	251	14
5365-01-253-8980	280	51	5340-01-254-7190	430	44
5365-01-253-8980	281	51	5340-01-254-7191	253	37
2510-01-254-1056	272	16	5340-01-254-7191	429	29
2510-01-254-1482	280	1	5340-01-254-7191	430	19
2510-01-254-1483	281	1	4710-01-254-7272	227	13
2510-01-254-1484	208	18	5305-01-255-0094	185	2
5360-01-254-1492	192	1	5330-01-255-0207	202	5
5342-01-254-1498	366	1	5330-01-255-0208	202	11
2510-01-254-1500	280	1	4730-01-255-0925	331	32
2510-01-254-1501	281	1	5365-01-255-0965	153	26
5320-01-254-2283	208	37	5365-01-255-0965	154	8

CROSS REFERENCE INDEXES

NATIONAL STOCK NUMBER INDEX

STOCK NUMBER	FIGURE NO	ITEM NO	STOCK NUMBER	FIGURE NO	ITEM NO
5365-01-255-0965	379	36	5340-01-255-9510	198	9
5305-01-255-1016	247	21	5340-01-255-9510	321	14
5305-01-255-1016	247	26	5340-01-255-9510	323	12
5305-01-255-1016	248	23	5340-01-255-9510	325	16
5305-01-255-1016	249	8	5340-01-255-9510	402	13
5305-01-255-1016	249	32	5340-01-255-9514	415	8
5305-01-255-1017	249	19	5340-01-255-9515	430	2
5340-01-255-1109	413	9	5360-01-255-9899	205	30
5340-01-255-1109	421	10	5340-01-255-9918	280	2
5340-01-255-1109	422	10	5340-01-255-9918	281	2
5325-01-255-1126	235	6	5340-01-255-9919	316	20
5340-01-255-1657	203	24	5340-01-255-9919	320	17
5306-01-255-2661	193	7	5340-01-255-9919	320	32
5306-01-255-2662	415	6	5340-01-255-9919	324	17
5305-01-255-2670	243	1	5340-01-255-9919	324	29
5305-01-255-2675	246	27	5305-01-256-0405	244	20
5310-01-255-2695	58	10	5305-01-256-0406	215	6
5310-01-255-2704	164	2	5305-01-256-0406	430	26
5340-01-255-2729	429	23	5310-01-256-0416	328	16
5315-01-255-2763	243	34	4030-01-256-0471	314	19
5315-01-255-2764	243	26	4030-01-256-0471	458	40
5360-01-255-2808	243	33	5340-01-256-0942	430	11
5340-01-255-2812	430	9	6685-01-256-3406	504	8
5340-01-255-2812	446	18	3030-01-256-3616	32	2
5340-01-255-2812	449	10	3030-01-256-3616	475	22
3020-01-255-2906	504	7	2590-01-256-3628	429	25
2590-01-255-2957	251	36	5310-01-256-4491	243	12
2590-01-255-2958	251	48	5310-01-256-4491	244	6
5305-01-255-3588	331	8	5340-01-256-4515	243	30
5305-01-255-3588	332	43	5340-01-256-4516	244	3
5365-01-255-3610	285	15	5340-01-256-4517	251	27
4030-01-255-3634	284	11	5340-01-256-4517	252	27
5305-01-255-4606	222	9	5340-01-256-4517	253	22
5305-01-255-4611	327	20	5340-01-256-4517	255	21
5365-01-255-4633	277	5	5365-01-256-4526	246	28
5365-01-255-4634	277	5	5340-01-256-4655	254	15
5340-01-255-4655	208	26	5340-01-256-4656	272	18
5305-01-255-4950	274	22	5340-01-256-4657	246	36
5330-01-255-4986	488	20	5340-01-256-4659	243	3
5365-01-255-4990	277	5	7690-01-256-4908	354	21
5365-01-255-4991	277	5	7690-01-256-4909	354	22
5325-01-255-5062	414	21	2530-01-256-4914	152	20
5325-01-255-5063	416	24	2930-01-256-5350	27	3
5325-01-255-5063	428	23	5305-01-256-6870	429	13
5320-01-255-6608	202	4	5305-01-256-6870	430	27
5340-01-255-9380	240	3	5305-01-256-6870	430	34
5310-01-255-9452	413	10	5340-01-256-9318	316	20

CROSS REFERENCE INDEXES

NATIONAL STOCK NUMBER INDEX

STOCK NUMBER	FIGURE NO	ITEM NO	STOCK NUMBER	FIGURE NO	ITEM NO
5340-01-256-9318	320	17	5340-01-258-4866	252	23
5340-01-256-9318	320	32	5340-01-258-6157	246	12
5340-01-256-9318	324	17	5340-01-258-6157	251	18
5340-01-256-9318	324	29	5340-01-258-6157	251	32
5365-01-256-9568	245	29	5340-01-258-6157	253	23
5325-01-257-0801	268	23	5340-01-258-6157	255	32
5340-01-257-0908	429	20	5340-01-258-6158	252	40
2510-01-257-1572	277	17	5340-01-258-6158	253	4
2510-01-257-1572	277	45	5340-01-258-6158	255	7
5340-01-257-2644	430	10	5340-01-258-6158	255	10
4710-01-257-2649	364	5	5340-01-258-6158	260	23
4710-01-257-2649	379	42	5340-01-258-8609	252	31
4720-01-257-2655	364	9	2590-01-258-9491	272	7
4720-01-257-2655	379	43	5340-01-259-0327	251	49
4730-01-257-3348	148	23	5340-01-259-0328	252	21
4720-01-257-3705	5	11	5340-01-259-0328	252	35
2540-01-257-3742	370	1	5340-01-259-0329	253	9
2510-01-257-3747	274	2	5340-01-259-0329	253	17
2510-01-257-3747	276	28	5340-01-259-0329	255	16
5340-01-257-3778	430	25	5340-01-259-0330	254	9
2530-01-257-3864	140	6	5340-01-259-0330	255	26
2510-01-257-3876	281	1	4140-01-259-2175	368	6
2540-01-257-3877	188	4	5340-01-259-3956	246	37
6220-01-257-3878	83	32	4210-01-259-5634	241	9
2510-01-257-3903	280	1	4210-01-259-5634	241	14
2510-01-257-3904	281	1	5320-01-259-6155	224	1
2530-01-257-3905	152	20	5320-01-259-6155	237	16
4730-01-257-4905	12	30	5320-01-259-6155	263	5
5342-01-257-7706	35	27	5305-01-259-6322	58	2
5310-01-257-7719	169	32	5305-01-259-6322	59	26
5310-01-257-7719	205	7	5305-01-259-6322	79	16
5310-01-257-7719	206	27	5305-01-259-6322	83	17
2590-01-257-8784	227	53	5305-01-259-6322	88	5
2590-01-257-8787	369	13	5305-01-259-6322	88	26
5310-01-258-1536	26	4	5305-01-259-6322	227	3
5310-01-258-1536	174	12	5305-01-259-6322	286	41
5310-01-258-1536	398	26	5305-01-259-6322	303	14
5340-01-258-1547	279	36	5305-01-259-6322	310	5
5320-01-258-2576	208	12	5305-01-259-6322	332	29
5340-01-258-4529	251	23	5305-01-259-6322	335	3
5340-01-258-4529	251	38	5305-01-259-6322	338	17
5340-01-258-4529	253	19	5305-01-259-6322	339	10
5340-01-258-4529	254	6	5305-01-259-6322	368	7
5340-01-258-4529	255	18	5305-01-259-6322	412	17
5340-01-258-4529	448	3	5305-01-259-6322	424	5
5340-01-258-4529	450	5	5305-01-259-6322	425	19
5330-01-258-4664	272	6	5305-01-259-6322	426	24

CROSS REFERENCE INDEXES

NATIONAL STOCK NUMBER INDEX

STOCK NUMBER	FIGURE NO	ITEM NO	STOCK NUMBER	FIGURE NO	ITEM NO
5305-01-259-6322	427	24	2510-01-262-6007	198	12
5305-01-259-6322	468	10	2510-01-262-6008	200	5
5320-01-259-7423	226	2	2510-01-262-6009	200	6
5320-01-259-7423	237	5	2510-01-262-6010	198	11
5340-01-259-7523	247	16	2510-01-262-6011	198	26
5310-01-259-7554	328	11	2590-01-262-7706	227	29
5340-01-259-8579	266	17	2590-01-262-7707	227	11
5340-01-259-8600	269	24	6670-01-262-8646	167	12
2590-01-260-0214	279	6	6670-01-262-8647	167	12
5342-01-260-0215	279	10	2590-01-262-9513	253	28
2590-01-260-0216	279	15	2590-01-262-9514	253	8
2590-01-260-0217	279	20	2590-01-262-9515	253	14
5340-01-260-0218	279	21	2540-01-262-9516	253	33
5360-01-260-0700	153	24	2540-01-262-9516	254	28
5360-01-260-0700	154	9	2510-01-262-9520	268	3
5340-01-260-4881	268	24	6670-01-263-2268	167	12
5310-01-260-5784	208	17	2590-01-263-3254	227	29
5340-01-260-5792	266	3	2590-01-263-3254	368	33
5342-01-260-7853	430	29	5306-01-263-6142	279	32
6150-01-260-8000	366	29	5306-01-263-8889	35	28
6150-01-260-8000	384	10	5306-01-263-8889	36	12
5340-01-260-9026	429	24	5306-01-263-8889	37	17
5340-01-260-9027	207	9	5306-01-263-8889	38	12
5340-01-260-9027	318	8	5306-01-263-8889	38A	8
5340-01-260-9027	325	21	5306-01-263-8889	472	14
5970-01-260-9132	39	75	5306-01-263-8889	475	21
5340-01-260-9874	266	3	5306-01-263-8889	476	19
5340-01-260-9940	286	13	5305-01-264-0923	245	9
5340-01-260-9942	217	2	5325-01-264-1522	207	3
2590-01-261-0523	279	22	5306-01-264-3531	174	1
5340-01-261-1564	251	41	5306-01-264-3531	472	16
2590-01-261-2636	202	6	5306-01-264-3531	475	24
2590-01-261-2637	202	12	5306-01-264-3531	476	20
2590-01-261-5484	202	13	5305-01-264-3555	230	14
2590-01-261-5485	230	22	5305-01-264-3602	183	1
2590-01-261-5485	231	27	5305-01-264-3602	185	11
6670-01-261-6844	167	12	5305-01-264-3602	187	15
6670-01-261-6845	167	12	5305-01-264-3602	188	11
6670-01-261-6846	167	12	5365-01-264-4023	196	13
6670-01-261-6847	167	12	5305-01-264-5809	155	10
2590-01-261-6851	227	24	5305-01-264-5809	226	33
2590-01-261-6851	369	12	5305-01-264-5809	227	36
6670-01-261-8011	167	12	5340-01-264-5833	234	13
6670-01-261-8012	167	12	5340-01-264-5833	252	16
6670-01-261-8013	167	12	5340-01-264-5833	253	38
2590-01-262-4980	279	4	5305-01-264-5864	46	7
2590-01-262-4981	279	7	5305-01-264-5874	199	50

CROSS REFERENCE INDEXES

NATIONAL STOCK NUMBER INDEX

STOCK NUMBER	FIGURE NO	ITEM NO	STOCK NUMBER	FIGURE NO	ITEM NO
5305-01-264-5874	343	19	2530-01-265-3153	157	4
5305-01-264-5874	495	9	2510-01-265-3155	293	17
5320-01-264-5978	199	14	4820-01-265-3156	492	10
5320-01-264-5978	217	3	2510-01-265-3157	293	17
5320-01-264-5978	219	6	4820-01-265-3159	492	12
5320-01-264-5978	245	35	2540-01-265-3160	292	7
5320-01-264-5978	264	1	4730-01-265-3166	301	6
5320-01-264-5978	265	1	4730-01-265-3166	302	10
5320-01-264-5978	295	9	4730-01-265-3166	303	1
5320-01-264-5978	297	2	4730-01-265-3166	304	1
5320-01-264-5978	300	5	4730-01-265-3166	305	3
5320-01-264-5978	307	7	4730-01-265-3166	306	1
5320-01-264-5978	308	13	4730-01-265-3166	309	2
5320-01-264-5978	342	8	4730-01-265-3166	310	2
5340-01-264-6104	197	5	2590-01-265-3185	155	3
5340-01-264-6108	430	14	2510-01-265-3194	293	22
2590-01-264-6531	251	29	4720-01-265-3213	336	2
5342-01-264-6532	211	2	4720-01-265-3222	301	2
5342-01-264-6533	212	2	4720-01-265-3223	492	5
7690-01-264-6536	358	4	4720-01-265-3224	492	13
7690-01-264-6536	443	18	4710-01-265-3228	335	2
5330-01-264-6537	363	5	4710-01-265-3228	335	8
5340-01-264-6540	363	8	4710-01-265-3228	336	5
5342-01-264-6543	363	22	4710-01-265-3229	335	7
5340-01-264-6544	363	6	4710-01-265-3229	336	4
2510-01-264-6546	211	13	4710-01-265-3230	493	8
2510-01-264-6546	212	14	4710-01-265-3231	334	8
3040-01-264-9554	279	8	4710-01-265-3232	492	2
2510-01-265-1126	213	21	4710-01-265-3233	492	1
2510-01-265-1127	213	31	2540-01-265-3234	54	1
5342-01-265-1129	293	27	4720-01-265-3237	301	1
2510-01-265-1130	214	28	4720-01-265-3238	343	12
9905-01-265-1131	59	22	4720-01-265-3239	302	13
9905-01-265-1132	59	22	4720-01-265-3239	305	2
7690-01-265-1133	362	3	2540-01-265-3266	343	21
7690-01-265-1134	362	4	4710-01-265-3275	334	10
7690-01-265-1135	362	5	4710-01-265-3276	493	4
2540-01-265-1137	224	11	4710-01-265-3277	493	2
2510-01-265-1138	211	1	2510-01-265-3281	297	3
2510-01-265-1139	211	1	2510-01-265-3281	297	10
2510-01-265-1140	212	1	2510-01-265-3282	291	7
2510-01-265-1141	212	1	2510-01-265-3282	297	10
2530-01-265-3148	157	4	2510-01-265-3283	297	9
4820-01-265-3149	494	7	4730-01-265-3284	302	5
4820-01-265-3149	496	31	4730-01-265-3284	305	7
4140-01-265-3151	342	1	4730-01-265-3285	304	3
4710-01-265-3152	496	17	4730-01-265-3285	306	5

CROSS REFERENCE INDEXES

NATIONAL STOCK NUMBER INDEX

STOCK NUMBER	FIGURE NO	ITEM NO	STOCK NUMBER	FIGURE NO	ITEM NO
4730-01-265-3285	309	6	5365-01-265-8937	283	20
2990-01-265-3297	346	2	5365-01-265-8937	438	16
2990-01-265-3298	347	1	5365-01-265-8938	283	20
5342-01-265-3672	212	2	5365-01-265-8938	438	16
5340-01-265-3676	363	18	5365-01-265-8939	283	20
5120-01-265-4872	501	6	5365-01-265-8939	438	16
2510-01-265-6953	214	16	5330-01-265-8946	223	3
6105-01-265-8634	494	19	5330-01-265-8947	223	1
6105-01-265-8634	498	14	5330-01-265-8948	213	1
4130-01-265-8691	344	1	5360-01-265-9116	156	4
6680-01-265-8698	496	19	5330-01-265-9231	293	33
4130-01-265-8726	496	1	6220-01-266-1651	65	24
5306-01-265-8767	262	5	5930-01-266-1809	494	8
5315-01-265-8771	39	23	5945-01-266-1810	59	5
5360-01-265-8798	157	3	5930-01-266-1811	58	14
5360-01-265-8799	157	3	3040-01-266-2122	109	17
5330-01-265-8803	293	1	5340-01-266-2995	202	7
5330-01-265-8804	214	1	4010-01-266-3842	292	18
5330-01-265-8805	214	25	5340-01-266-3843	346	4
5330-01-265-8806	223	3	5340-01-266-3844	287	18
5330-01-265-8807	223	1	5340-01-266-3845	293	14
5330-01-265-8808	213	32	5340-01-266-3846	287	9
5331-01-265-8809	492	11	5920-01-266-3908	39	62
5340-01-265-8858	289	23	9905-01-266-3913	362	2
5340-01-265-8859	292	12	5930-01-266-3917	496	30
5340-01-265-8883	157	2	5930-01-266-3919	58	4
5340-01-265-8895	262	6	5930-01-266-3919	396	14
5306-01-265-8897	287	31	5961-01-266-3984	59	6
5306-01-265-8897	294	7	2510-01-266-4003	215	3
5340-01-265-8905	283	24	5930-01-266-4592	55	11
5340-01-265-8905	438	20	5930-01-266-4592	56	17
5340-01-265-8911	211	25	5945-01-266-4593	52	18
5340-01-265-8911	212	28	5945-01-266-4593	56	9
5340-01-265-8911	213	27	5342-01-266-5689	211	2
5340-01-265-8911	214	22	2510-01-266-5690	218	3
5340-01-265-8921	262	8	5342-01-266-5691	217	1
5340-01-265-8922	238	2	2540-01-266-5702	229	3
5340-01-265-8923	258	7	7690-01-266-5706	59	20
5340-01-265-8923	259	3	5340-01-266-5708	224	14
5340-01-265-8923	260	3	2510-01-266-5711	216	10
5340-01-265-8923	262	11	5310-01-266-6392	488	16
5340-01-265-8923	287	27	5340-01-266-6398	227	15
5340-01-265-8923	447	4	5342-01-266-7559	289	8
5340-01-265-8924	216	6	2510-01-266-8013	277	18
5340-01-265-8925	256	5	2510-01-266-8013	277	44
5340-01-265-8925	257	10	5306-01-266-8274	202	28
5340-01-265-8925	289	1	5325-01-266-8414	207	2

CROSS REFERENCE INDEXES

NATIONAL STOCK NUMBER INDEX

STOCK NUMBER	FIGURE NO	ITEM NO	STOCK NUMBER	FIGURE NO	ITEM NO
5325-01-266-8414	208	20	9330-01-269-7114	287	17
5340-01-266-9173	313	3	6115-01-269-7911	39	21
5340-01-266-9173	443	3	6230-01-269-8054	65	22
5340-01-266-9173	457	21	6230-01-269-8054	289	28
5180-01-267-2907	509	1	5985-01-269-8271	341	2
5365-01-267-6769	279	13	5985-01-269-8272	340	6
2520-01-267-7371	148	11	5985-01-269-8274	341	4
5315-01-267-7570	403	8	5970-01-269-8384	39	14
5342-01-268-0921	275	23	5940-01-269-8396	95	19
2520-01-268-1051	363	2	5315-01-269-8504	213	17
5305-01-268-5680	333	40	5315-01-269-8504	214	13
2540-01-268-7203	299	3	5365-01-269-8671	211	8
5640-01-268-7204	222	7	5365-01-269-8671	212	5
5640-01-268-7204	495	3	5365-01-269-8672	211	29
6150-01-269-0067	89	1	5365-01-269-8672	212	31
5310-01-269-0786	26	8	5935-01-269-8992	52	19
5940-01-269-1816	89	4	5935-01-269-8992	56	6
6150-01-269-1839	339	21	5310-01-269-9245	411	6
6150-01-269-1840	58	13	5995-01-269-9525	338	14
6150-01-269-1840	90	1	5995-01-269-9525	339	11
6150-01-269-1848	338	6	4730-01-269-9530	336	1
6150-01-269-1848	339	7	5920-01-270-0090	52	10
6150-01-269-1849	338	1	5920-01-270-0090	59	13
6150-01-269-1854	39	65	5905-01-270-0966	342	3
6150-01-269-1856	39	40	5330-01-270-1353	274	7
6150-01-269-1857	39	46	5330-01-270-1353	276	26
6150-01-269-1858	39	64	6220-01-270-1454	64	19
6150-01-269-1859	56	5	5970-01-270-1465	39	27
6150-01-269-1861	56	19	5977-01-270-1466	39	66
6150-01-269-1862	56	20	5970-01-270-1467	39	60
6150-01-269-1863	39	51	5977-01-270-1468	39	72
6150-01-269-1897	93	1	4720-01-270-2226	304	4
5306-01-269-4319	121	21	2540-01-270-2250	213	5
4130-01-269-4921	496	27	2540-01-270-2250	214	33
6220-01-269-5263	65	3	3120-01-270-2645	39	18
6150-01-269-5275	91	1	3120-01-270-2646	496	4
6150-01-269-5298	95	1	5310-01-270-2661	494	2
6150-01-269-5299	94	1	5310-01-270-2661	495	13
6150-01-269-5300	92	1	5310-01-270-2661	496	8
5935-01-269-5994	52	4	5340-01-270-2681	55	9
5935-01-269-5994	57	3	5330-01-270-3668	39	26
5306-01-269-6254	279	9	5940-01-270-3700	92	2
2990-01-269-6625	337	1	5940-01-270-3700	93	6
6220-01-269-7066	65	12	5940-01-270-3700	95	7
6220-01-269-7067	55	8	5940-01-270-3700	96	11
6220-01-269-7067	56	10	5940-01-270-3701	93	4
4140-01-269-7101	494	18	5940-01-270-3702	95	15

CROSS REFERENCE INDEXES

NATIONAL STOCK NUMBER INDEX

STOCK NUMBER	FIGURE NO	ITEM NO	STOCK NUMBER	FIGURE NO	ITEM NO
5940-01-270-3702	96	4	5330-01-270-8315	426	15
2540-01-270-3776	337	21	5330-01-270-8315	427	15
2540-01-270-4353	298	6	5330-01-270-8316	39	67
5340-01-270-4415	298	1	5330-01-270-8317	343	7
5340-01-270-4415	346	7	5340-01-270-8370	211	18
5975-01-270-4587	58	3	5340-01-270-8370	212	15
2540-01-270-5065	238	5	5310-01-270-8377	39	13
4520-01-270-5080	298	4	5310-01-270-8415	39	22
5310-01-270-5394	343	22	5340-01-270-8431	212	25
5305-01-270-5418	211	21	5340-01-270-8431	258	10
5305-01-270-5418	212	19	5340-01-270-8431	259	13
5305-01-270-5419	342	2	5340-01-270-8431	260	24
5305-01-270-5419	496	26	5340-01-270-8432	212	22
5305-01-270-5419	498	7	5340-01-270-8432	258	8
5305-01-270-5435	335	10	5340-01-270-8432	259	2
5305-01-270-5435	336	7	5340-01-270-8432	260	18
5306-01-270-5448	35	29	5340-01-270-8433	211	20
5306-01-270-5448	36	13	5340-01-270-8433	212	18
5306-01-270-5448	38	13	5340-01-270-8435	213	28
5306-01-270-5448	33A	7	5340-01-270-8435	214	18
5306-01-270-5448	38A	9	5340-01-270-8455	264	7
2540-01-270-6458	290	4	5340-01-270-8455	265	6
2540-01-270-6459	219	5	5340-01-270-8483	213	12
2540-01-270-6459	290	7	5340-01-270-8483	214	6
2540-01-270-6460	290	9	5340-01-270-8484	39	49
2540-01-270-6537	236	3	5340-01-270-8489	338	23
2540-01-270-6538	236	4	5340-01-270-8489	339	18
2540-01-270-6539	236	5	5340-01-270-8489	486	10
2540-01-270-6540	237	2	5975-01-270-8546	59	2
2540-01-270-6541	237	2	5975-01-270-8552	294	1
5305-01-270-7225	227	23	2540-01-270-9344	229	1
5305-01-270-7225	228	2	2590-01-270-9446	295	5
5305-01-270-7225	484	17	2510-01-270-9447	295	4
3040-01-270-7917	238	10	3040-01-270-9466	37	6
2510-01-270-7919	347	5	4710-01-270-9507	288	8
5342-01-270-7921	307	13	4720-01-270-9616	303	7
5342-01-270-7921	308	1	4710-01-270-9617	310	3
2510-01-270-7922	222	23	4720-01-270-9618	310	8
2510-01-270-7925	296	10	4730-01-270-9652	311	11
4730-01-270-7931	301	8	4730-01-270-9652	312	7
3040-01-270-7961	238	15	2510-01-270-9707	300	1
5310-01-270-8189	65	21	2540-01-270-9711	238	4
5310-01-270-8189	91	8	5305-01-271-1806	191	13
5310-01-270-8189	93	20	5320-01-271-1834	211	6
5310-01-270-8189	216	2	5320-01-271-1834	212	3
5330-01-270-8315	340	4	5320-01-271-1834	296	18
5330-01-270-8315	341	3	5320-01-271-1834	346	8

CROSS REFERENCE INDEXES

NATIONAL STOCK NUMBER INDEX

STOCK NUMBER	FIGURE NO	ITEM NO	STOCK NUMBER	FIGURE NO	ITEM NO
5310-01-271-1841	39	61	5320-01-271-6357	261	8
5340-01-271-1846	211	22	5320-01-271-6357	289	22
5340-01-271-1846	212	20	5320-01-271-6357	291	1
2540-01-271-1946	288	27	5320-01-271-6357	293	3
2540-01-271-1954	311	6	5320-01-271-6357	295	1
2540-01-271-1955	311	18	5320-01-271-6357	296	14
2540-01-271-1991	293	20	5320-01-271-6357	297	1
5365-01-271-2491	266	26	5320-01-271-6357	298	3
5365-01-271-2491	439	4	5320-01-271-6357	299	4
1640-01-271-2598	279	16	5320-01-271-6357	300	7
2540-01-271-2832	290	2	5320-01-271-6357	307	8
2540-01-271-2839	347	9	5320-01-271-6357	308	10
2540-01-271-2840	289	3	5320-01-271-6357	334	2
2540-01-271-2841	289	3	5320-01-271-6357	343	1
4520-01-271-2949	300	11	5320-01-271-6357	347	10
5340-01-271-3059	363	7	5320-01-271-6357	365	14
2540-01-271-3769	300	9	5320-01-271-6357	369	7
2590-01-271-3770	289	26	5320-01-271-6357	417	9
2540-01-271-3771	289	12	5340-01-271-6361	215	5
2540-01-271-3772	288	5	3120-01-271-6432	39	59
2540-01-271-3773	288	28	5340-01-271-6455	494	20
3040-01-271-3823	39	41	5340-01-271-6461	296	11
3040-01-271-3824	238	17	3130-01-271-6464	39	3
2540-01-271-3828	236	2	5340-01-271-6465	494	14
5340-01-271-4281	279	25	5340-01-271-6466	494	15
5340-01-271-4282	279	30	5340-01-271-6467	496	28
2540-01-271-5071	263	1	4710-01-271-6957	302	12
2540-01-271-5072	237	8	4720-01-271-6985	331	24
5340-01-271-5866	211	5	2510-01-271-7085	228	10
5340-01-271-5866	291	3	4710-01-271-7937	287	30
5340-01-271-5866	297	5	2540-01-271-8009	238	9
4720-01-271-6151	300	6	2540-01-271-8010	263	4
3110-01-271-6355	39	20	5340-01-271-9573	220	4
5320-01-271-6357	71	9	5340-01-271-9574	220	4
5320-01-271-6357	197	6	2540-01-271-9806	289	15
5320-01-271-6357	199	12	2590-01-271-9807	289	26
5320-01-271-6357	211	10	5999-01-272-0018	338	12
5320-01-271-6357	213	2	5999-01-272-0018	339	9
5320-01-271-6357	214	23	5999-01-272-0018	410	12
5320-01-271-6357	215	1	4710-01-272-0513	302	11
5320-01-271-6357	216	11	2510-01-272-0536	224	3
5320-01-271-6357	217	7	2510-01-272-0537	222	6
5320-01-271-6357	220	3	2510-01-272-0538	288	14
5320-01-271-6357	230	21	5310-01-272-1356	56	4
5320-01-271-6357	231	26	5330-01-272-2601	222	4
5320-01-271-6357	235	17	5340-01-272-2635	289	7
5320-01-271-6357	245	36	5365-01-272-2663	39	73

CROSS REFERENCE INDEXES

NATIONAL STOCK NUMBER INDEX

STOCK NUMBER	FIGURE NO	ITEM NO	STOCK NUMBER	FIGURE NO	ITEM NO
5340-01-272-2677	39	34	5365-01-272-7482	300	14
5340-01-272-2732	224	17	5340-01-272-7493	288	31
5340-01-272-2801	218	4	5340-01-272-7495	287	2
5365-01-272-2806	289	18	5365-01-272-7502	39	15
5310-01-272-3311	494	9	5365-01-272-7504	335	11
5310-01-272-3311	496	6	5365-01-272-7504	336	8
5340-01-272-3353	213	3	5307-01-272-7539	39	54
5340-01-272-3361	219	7	4710-01-272-7565	302	2
5340-01-272-3389	58	6	4030-01-272-7573	311	9
5340-01-272-3402	287	10	4030-01-272-7573	312	5
5340-01-272-3403	257	7	5340-01-272-7712	311	1
2510-01-272-3951	288	12	5330-01-272-7727	223	2
2510-01-272-3952	288	14	5340-01-272-7814	218	8
2510-01-272-3953	288	16	5340-01-272-7815	260	9
5306-01-272-4798	39	24	5305-01-272-8302	39	78
5310-01-272-4823	292	9	5305-01-272-8322	292	22
5310-01-272-4831	39	48	5305-01-272-8323	292	20
5365-01-272-4866	237	4	5330-01-272-8337	39	71
5365-01-272-4867	237	10	5365-01-272-8376	298	5
5365-01-272-4877	39	50	5342-01-272-8391	492	4
5340-01-272-4935	289	24	5340-01-272-8397	293	4
5340-01-272-4942	217	4	5340-01-272-8405	289	17
5340-01-272-4962	289	21	5340-01-272-8409	215	2
5310-01-272-5464	300	10	5340-01-272-8410	214	31
5310-01-272-5470	238	14	5340-01-272-8431	259	8
5330-01-272-5474	39	2	5340-01-272-8431	264	4
5340-01-272-5516	39	5	5365-01-272-8435	93	24
5340-01-272-5517	219	7	5365-01-272-8435	95	41
5340-01-272-5594	287	29	5305-01-272-9025	39	47
5340-01-272-5595	58	1	5305-01-272-9034	339	23
5340-01-272-5611	213	38	5305-01-272-9042	56	25
5340-01-272-5652	289	21	5305-01-272-9042	57	2
5940-01-272-5800	52	26	5305-01-272-9042	65	2
5355-01-272-5824	56	24	5305-01-272-9042	92	11
5340-01-272-6520	264	5	5305-01-272-9042	95	29
5340-01-272-6520	265	5	5305-01-272-9042	283	27
5310-01-272-6546	287	32	5305-01-272-9042	304	9
5365-01-272-6574	298	2	5305-01-272-9042	339	1
5340-01-272-6578	219	2	5330-01-272-9071	39	17
5340-01-272-6633	238	12	5365-01-272-9082	308	6
5340-01-272-6634	490	13	5340-01-272-9103	237	8
5310-01-272-7449	238	23	5340-01-272-9105	288	18
5310-01-272-7449	287	26	5340-01-272-9109	294	3
5330-01-272-7454	39	4	5340-01-272-9145	222	16
5330-01-272-7471	347	8	5365-01-272-9275	96	31
5330-01-272-7472	347	6	5305-01-272-9959	238	7
5330-01-272-7473	295	3	5310-01-272-9981	142	35

CROSS REFERENCE INDEXES

NATIONAL STOCK NUMBER INDEX

STOCK NUMBER	FIGURE NO	ITEM NO	STOCK NUMBER	FIGURE NO	ITEM NO
5310-01-272-9981	143	41	5320-01-275-1998	64	2
5310-01-272-9985	289	25	5320-01-275-1998	197	14
5330-01-272-9995	219	8	5320-01-275-1998	199	53
5365-01-273-0010	298	9	5320-01-275-1998	212	21
5320-01-273-0020	287	15	5320-01-275-1998	332	12
5315-01-273-0096	287	22	5320-01-275-1998	379	27
5340-01-273-0136	260	5	5975-01-275-2695	229	4
6220-01-273-0500	47	4	5330-01-275-3381	296	8
2510-01-273-0572	343	8	5360-01-275-3512	218	2
5310-01-273-1635	64	20	2540-01-275-6202	287	21
5340-01-273-1680	289	7	2540-01-275-6203	288	15
5340-01-273-1684	214	24	2510-01-275-8026	211	9
5340-01-273-1686	290	6	5920-01-275-8096	39	58
5340-01-273-1721	492	3	5340-01-275-8567	253	29
5340-01-273-2342	213	10	5340-01-275-8567	279	31
5340-01-273-2342	214	8	5340-01-275-8568	256	1
5340-01-273-2368	490	6	5340-01-275-8568	257	4
5340-01-273-2380	59	21	5306-01-276-0848	35	21
5340-01-273-2381	215	8	2540-01-276-1451	224	5
5320-01-273-4601	224	10	2540-01-276-1451	237	15
5320-01-273-4601	294	8	9330-01-276-1470	287	8
5340-01-273-4667	287	25	5306-01-276-1621	283	11
5340-01-273-4668	57	9	5306-01-276-1621	438	12
5365-01-273-4690	338	3	5340-01-276-3615	220	7
5306-01-273-6333	154	2	5340-01-276-3615	237	1
4730-01-273-7660	343	11	5305-01-276-4855	157	1
2510-01-273-8376	213	35	4420-01-276-5050	495	15
5340-01-274-3021	52	15	2510-01-276-5058	54	8
5340-01-274-3184	237	14	2510-01-276-5058	55	1
5340-01-274-3287	260	12	2590-01-276-5071	54	3
5340-01-274-3295	293	13	5340-01-276-5850	290	1
5325-01-274-3317	95	30	2540-01-276-5928	289	11
5340-01-274-3498	216	1	2540-01-276-5935	224	7
5365-01-274-3573	339	26	5340-01-276-6673	211	12
2510-01-274-4234	455	1	5340-01-276-6673	212	6
2510-01-274-4234	455	KIT	5340-01-276-6738	496	18
5365-01-274-4674	338	5	5340-01-276-7415	213	7
5365-01-274-4675	95	38	5340-01-276-7415	214	3
2510-01-274-4901	222	24	2590-01-276-7633	65	1
5330-01-274-6106	296	5	6150-01-276-7698	54	4
5342-01-274-6210	290	1	5970-01-276-7753	BULK	41
5340-01-274-7337	258	1	2540-01-277-2313	52	1
5340-01-274-7337	259	9	5365-01-277-2387	283	13
5342-01-274-9884	155	8	5365-01-277-2387	438	14
5340-01-274-9899	238	16	5340-01-277-4426	219	9
5342-01-275-0532	217	5	5340-01-277-4427	155	4
5310-01-275-1189	222	14	5340-01-277-4613	215	7

CROSS REFERENCE INDEXES

NATIONAL STOCK NUMBER INDEX

STOCK NUMBER	FIGURE NO	ITEM NO	STOCK NUMBER	FIGURE NO	ITEM NO
5340-01-277-5129	258	3	5340-01-282-2670	265	4
5340-01-277-5129	259	6	5340-01-282-2670	289	16
5340-01-277-5129	260	19	5305-01-282-3386	224	9
5340-01-277-5129	262	14	5342-01-282-4853	71	8
5340-01-277-8125	213	40	3030-01-282-6968	35	1
5342-01-277-9101	147	6	3030-01-282-6968	472	19
5342-01-277-9102	147	3	5935-01-282-7833	52	6
4710-01-278-1053	12	10	5935-01-282-7833	57	5
5315-01-278-2123	292	21	2540-01-282-8562	300	16
5305-01-278-7118	494	17	5360-01-282-9316	280	23
5340-01-278-8588	213	39	5360-01-282-9316	281	23
5340-01-278-8588	214	32	9390-01-282-9949	296	7
5310-01-278-9555	208	21	5340-01-283-2458	247	9
5310-01-278-9555	283	23	5305-01-283-7776	293	21
5360-01-278-9723	238	20	9905-01-283-7937	345	17
4130-01-278-9837	495	10	7690-01-283-7938	345	4
4720-01-279-5149	331	31	5310-01-283-8482	383	7
2540-01-280-4159	293	18	6220-01-284-2709	61	8
2510-01-280-4240	293	2	2540-01-284-7091	345	2
5310-01-280-5796	379	25	4520-01-284-7099	345	22
5365-01-280-5875	337	25	4520-01-284-7099	KITS	7
5365-01-280-5875	338	25	5315-01-284-9812	21	13
5340-01-280-5985	311	16	2940-01-285-2942	343	20
5315-01-280-6185	230	9	6150-01-285-3901	96	1
5315-01-280-6185	287	23	6110-01-285-3902	349	9
5342-01-280-6264	288	25	5305-01-285-4923	44	10
5310-01-280-6751	39	56	4710-01-285-5123	496	20
4330-01-280-8417	19	7	2540-01-285-6066	498	4
5975-01-280-8922	57	10	2540-01-285-6087	56	1
5330-01-281-0911	293	29	2530-01-285-8381	169	23
2510-01-281-1032	228	6	5307-01-286-6007	279	24
5340-01-281-3429	288	18	5310-01-286-6077	44	9
5330-01-281-6523	BULK	52	5310-01-286-6077	234	3
5340-01-281-7795	496	5	5310-01-286-6077	239	4
5340-01-281-7798	498	12	5340-01-286-6191	62	11
4720-01-282-0143	496	22	5306-01-286-7182	203	25
4720-01-282-0160	496	24	5306-01-286-7182	204	10
5340-01-282-0469	498	2	5905-01-287-4255	349	3
5330-01-282-0913	341	5	5905-01-287-4256	349	11
5340-01-282-1115	311	15	5340-01-287-5825	227	34
4130-01-282-1895	496	2	5340-01-287-5825	227	35
5330-01-282-2208	498	13	5340-01-287-6352	262	15
5330-01-282-2213	277	10	5315-01-287-6520	491	4
5330-01-282-2214	496	12	5310-01-287-6543	345	27
5330-01-282-2214	498	1	5310-01-287-6557	349	12
2930-01-282-2524	498	9	5930-01-287-6698	58	5
5305-01-282-2667	39	31	5365-01-287-8645	491	9

CROSS REFERENCE INDEXES

NATIONAL STOCK NUMBER INDEX

STOCK NUMBER	FIGURE NO	ITEM NO	STOCK NUMBER	FIGURE NO	ITEM NO
5365-01-287-8701	491	17	5342-01-289-7708	295	12
5310-01-287-8726	345	13	5340-01-289-7793	494	16
5340-01-287-8761	260	15	5365-01-289-7852	35	11
5820-01-287-9612	428	KIT	5325-01-289-7859	74	7
6150-01-287-9917	345	43	5325-01-289-7859	91	13
6150-01-287-9918	345	9	5325-01-289-7859	493	6
6150-01-287-9923	349	10	2510-01-289-8258	226	36
6150-01-287-9924	349	2	2510-01-289-8259	226	36
6150-01-287-9925	349	1	2510-01-289-8260	226	36
6150-01-287-9926	349	13	2540-01-289-8328	345	28
5331-01-288-1062	467	4	2540-01-289-8329	345	39
5331-01-288-1062	491	10	2540-01-289-8330	KITS	79
5305-01-288-1129	349	7	5330-01-289-9231	425	12
5305-01-288-1130	349	5	2520-01-289-9663	491	1
5340-01-288-1242	491	24	2540-01-290-0715	345	36
5310-01-288-1257	213	34	4320-01-290-0748	491	26
5310-01-288-1257	214	27	5325-01-290-1695	91	12
5330-01-288-1307	KITS	85	5995-01-290-1719	426	1
5340-01-288-2127	292	6	5995-01-290-1719	427	1
2540-01-288-5240	KITS	47	5340-01-290-2263	337	14
5640-01-288-5547	493	5	5340-01-290-2265	295	2
5340-01-288-6550	307	10	5340-01-290-2279	417	6
5340-01-288-6550	308	11	5330-01-290-2709	337	9
5340-01-288-6551	55	15	5340-01-290-2761	337	11
5975-01-288-6594	345	11	5315-01-290-3327	156	10
2540-01-288-8567	KITS	80	2815-01-290-3705	491	23
2510-01-289-2233	226	36	2520-01-290-3921	KITS	112
5340-01-289-3228	498	16	5340-01-290-4887	425	4
5340-01-289-3231	337	10	5340-01-290-4887	427	5
5340-01-289-3243	429	2	5340-01-290-4888	426	7
5340-01-289-3244	342	7	2940-01-290-5014	337	8
5340-01-289-3245	295	11	2510-01-290-5675	423	5
2520-01-289-3617	KITS	111	5340-01-290-6234	128	65
5365-01-289-4434	35	10	5340-01-290-6234	129	37
5340-01-289-4474	307	11	5305-01-290-6290	345	5
5340-01-289-4475	53	2	5340-01-290-6331	345	3
6150-01-289-4761	424	1	5340-01-290-6342	417	14
5325-01-289-5038	92	19	5340-01-290-6343	426	3
5340-01-289-5055	308	12	3040-01-290-6757	337	22
5310-01-289-5455	154	4	3040-01-290-6758	337	16
5940-01-289-5955	96	14	3040-01-290-6760	337	23
5950-01-289-6007	491	8	5305-01-290-8206	21	10
5365-01-289-6169	92	18	5340-01-290-8360	21	9
5325-01-289-6196	95	45	5340-01-290-8390	417	17
5315-01-289-6212	271	11	5340-01-290-8473	423	6
5315-01-289-6212	271	24	2920-01-290-9245	45	17
5340-01-289-6216	53	1	2590-01-291-1033	417	13

CROSS REFERENCE INDEXES

NATIONAL STOCK NUMBER INDEX

STOCK NUMBER	FIGURE NO	ITEM NO	STOCK NUMBER	FIGURE NO	ITEM NO
2540-01-291-1043	343	2	5340-01-296-2814	294	6
5340-01-291-2301	307	5	5305-01-296-7762	343	6
7690-01-291-2974	354	6	5305-01-296-7762	494	1
2520-01-291-2975	140	4	5306-01-296-8600	491	22
2520-01-291-2975	147	4	4730-01-296-9318	337	4
5340-01-291-4537	417	12	4730-01-296-9318	398	31
2530-01-291-4597	154	3	2530-01-296-9333	138	8
5330-01-291-4615	BULK	46	2530-01-296-9333	139	8
6150-01-291-4809	345	41	2530-01-296-9333	146	8
5340-01-291-5186	425	7	2540-01-296-9358	343	13
5340-01-291-5186	427	8	4720-01-297-0255	177	7
5340-01-291-5711	417	10	5340-01-297-1549	296	13
5995-01-291-6377	425	1	5340-01-297-2800	21	5
5995-01-291-6377	426	2	6220-01-297-3217	61	9
5995-01-291-6377	427	2	5340-01-297-4127	64	1
5995-01-291-6384	428	1	4730-01-297-5111	337	5
5340-01-291-8915	418	3	2520-01-297-5200	148	8
5340-01-291-8915	419	3	6680-01-298-0498	47	12
5340-01-291-8915	420	8	5305-01-298-2436	332	45
5340-01-291-8915	421	5	4730-01-298-4363	401	3
5340-01-291-8915	422	7	5310-01-298-4686	279	5
5340-01-291-8915	423	11	5330-01-298-4713	211	28
5307-01-291-9018	30	5	5330-01-298-4713	212	24
5307-01-291-9018	490	4	5330-01-298-6009	296	9
5310-01-292-5354	42	12	5310-01-298-7770	398	21
5340-01-292-5402	42	9	5365-01-298-7780	293	28
5340-01-292-5402	475	7	5330-01-298-8127	340	7
3010-01-292-6428	148	9	5355-01-298-8571	280	44
5940-01-292-6907	345	6	5355-01-298-8571	281	44
5325-01-292-7558	485	24	5340-01-298-9691	417	14
5340-01-292-8404	37	12	5340-01-299-2963	252	28
5340-01-292-8404	38	3	5310-01-299-6460	327	4
5340-01-292-8404	42	1	4010-01-299-7699	293	24
5340-01-292-8404	475	12	5975-01-299-7781	52	7
5340-01-293-0125	35	24	5975-01-299-7781	57	6
5340-01-293-0125	42	1	4720-01-299-8469	337	20
6150-01-293-4074	349	6	2990-01-299-8820	401	13
5330-01-293-5345	163	4	5315-01-300-3012	280	24
5340-01-293-5558	163	2	5315-01-300-3012	281	24
2540-01-293-6926	368	2	5340-01-300-3715	141	13
5340-01-294-3230	300	3	5340-01-300-3715	149	7
9905-01-294-3356	52	8	4130-01-300-6350	494	3
9905-01-294-3356	57	7	2540-01-300-8744	KITS	73
5340-01-294-4415	300	2	2540-01-300-8745	KITS	72
5340-01-295-1088	431	5	5340-01-301-7929	147	10
5340-01-295-8169	431	1	2540-01-302-2595	432	KIT
5340-01-296-1736	494	6	4820-01-303-3982	172	15

CROSS REFERENCE INDEXES

NATIONAL STOCK NUMBER INDEX

STOCK NUMBER	FIGURE NO	ITEM NO	STOCK NUMBER	FIGURE NO	ITEM NO
5310-01-303-4701	43	31	4730-01-311-4294	17	4
5310-01-303-4701	425	6	5310-01-312-4777	203	22
5310-01-303-4701	426	9	5975-01-312-5469	417	1
5310-01-303-4701	427	7	2590-01-312-7355	BULK	44
2510-01-303-5769	47	8	2540-01-313-0678	230	6
5310-01-304-8733	43B	12	3020-01-313-0682	34	21
5310-01-304-8733	43B	30	5310-01-313-3562	329	16
5365-01-305-7067	128	22			
5365-01-305-7067	130	25			
5961-01-305-8848	60	8	5310-01-313-3562	461	4
3120-01-306-3577	314	31	4910-01-313-8839	353	1
5340-01-306-3606	300	4	4710-01-313-9340	379	31
3010-01-306-4113	458	24	2540-01-314-0142	397	KIT
2590-01-306-5881	227	9	2930-01-314-0145	379	33
4820-01-306-6838	172	14	2990-01-314-0151	379	30
5330-01-306-7887	458	23	2540-01-314-1121	284	16
5365-01-306-9955	458	9	2540-01-314-1121	439	9
2510-01-307-0152	331	7	2530-01-314-1129	157	22
2510-01-307-0152	332	44	2530-01-314-1129	158	12
3040-01-307-6157	458	3	2540-01-314-1130	379	26
2590-01-307-9303	468	14	2540-01-314-1188	329	2
5310-01-308-0131	199	8	2540-01-314-1189	329	3
5340-01-308-2168	482	20	2540-01-314-1190	329	3
5340-01-308-3851	484	3	5340-01-314-1955	329	17
1640-01-308-5097	BULK	50	5340-01-314-1956	329	15
4010-01-308-9168	482	6	5935-01-314-2084	380	9
5305-01-309-1521	458	1	2540-01-314-2101	329	5
5995-01-309-2953	82	1	5340-01-314-2445	379	35
5640-01-309-3866	200	4	2540-01-314-2782	320	2
5640-01-309-3867	200	1	2540-01-314-2786	316	1
5640-01-309-3868	200	2	4710-01-314-4483	11	10
5640-01-309-3870	200	3	4710-01-314-4484	11	17
5330-01-309-4340	482	16	4710-01-314-4485	11	16
2540-01-309-4459	23	11	4710-01-314-4486	11	24
2540-01-309-4459	24	12	4710-01-314-4487	11	18
6130-01-309-6458	39	53	4710-01-314-4488	11	28
5325-01-309-7164	379	16	4710-01-314-4489	11	30
5340-01-309-7900	296	16	2510-01-314-4892	397	18
5340-01-310-1189	213	16	5340-01-314-4951	83	26
5340-01-310-1658	214	12	5340-01-314-4951	445	11
2510-01-310-2324	274	6	6150-01-314-5241	381	4
5340-01-310-5321	224	4	5365-01-314-5544	379	4
5330-01-310-6780	4	27	5365-01-314-5544	379	6
2920-01-310-9973	39	28	5340-01-314-5567	379	11
2920-01-310-9978	39	16	5340-01-314-5602	104	19
5340-01-311-1633	104	18	5340-01-314-5602	105	27
5340-01-311-3033	138	4	6150-01-314-5643	381	1
5340-01-311-3033	145	4	5340-01-314-5957	210	15
5930-01-311-3610	54	10	5340-01-314-5957	213	23

CROSS REFERENCE INDEXES

NATIONAL STOCK NUMBER INDEX

STOCK NUMBER	FIGURE NO	ITEM NO	STOCK NUMBER	FIGURE NO	ITEM NO
5340-01-314-5957	225	14	5340-01-314-5957	289	2
5340-01-314-5957	231	3	5340-01-314-5957	292	2
5340-01-314-5957	234	15	5340-01-314-5957	318	4
5340-01-314-5957	240	11	5340-01-314-5957	374	3
5340-01-314-5957	246	1	5340-01-314-5957	429	9
5340-01-314-5957	246	7	5340-01-314-5957	430	5
5340-01-314-5957	247	11	5340-01-314-5957	430	21
5340-01-314-5957	247	22	5340-01-314-5957	430	32
5340-01-314-5957	248	3	5340-01-314-5957	446	5
5340-01-314-5957	249	7	5340-01-314-5957	447	2
5340-01-314-5957	249	15	5340-01-314-5957	448	2
5340-01-314-5957	249	22	5340-01-314-5957	449	4
5340-01-314-5957	249	31	5340-01-314-5957	450	3
5340-01-314-5957	251	16	5330-01-314-6781	104	21
5340-01-314-5957	251	24	5340-01-314-6838	379	51
5340-01-314-5957	251	30	2540-01-314-7834	230	1
5340-01-314-5957	251	40	2540-01-314-7834	235	1
5340-01-314-5957	252	18	2540-01-314-7835	230	7
5340-01-314-5957	252	33	2815-01-314-7940	1	1
5340-01-314-5957	252	38	3990-01-314-8393	199	19
5340-01-314-5957	253	6	3990-01-314-8393	251	20
5340-01-314-5957	253	11	3990-01-314-8393	270	12
5340-01-314-5957	253	16	3990-01-314-8393	296	3
5340-01-314-5957	253	26	2540-01-314-9320	381	KIT
5340-01-314-5957	253	31	2540-01-314-9378	230	2
5340-01-314-5957	254	5	2540-01-314-9378	235	2
5340-01-314-5957	254	11	2540-01-314-9379	432	1
5340-01-314-5957	254	17	2540-01-314-9380	432	1
5340-01-314-5957	255	5	6150-01-315-1148	381	3
5340-01-314-5957	255	11	5310-01-315-1535	379	38
5340-01-314-5957	255	15	5330-01-315-1609	104	20
5340-01-314-5957	255	24	5330-01-315-1609	105	28
5340-01-314-5957	255	31	2540-01-315-3143	234	2
5340-01-314-5957	256	3	2540-01-315-3143	239	1
5340-01-314-5957	257	2	4730-01-315-3242	385	9
5340-01-314-5957	258	4	2540-01-315-3358	234	2
5340-01-314-5957	259	4	5310-01-315-3403	234	10
5340-01-314-5957	260	1	5310-01-315-3403	235	13
5340-01-314-5957	262	2	5310-01-315-3403	239	7
5340-01-314-5957	262	10	5310-01-315-3403	402	10
5340-01-314-5957	263	2	5365-01-315-3595	329	4
5340-01-314-5957	264	3	5307-01-315-3597	8	12
5340-01-314-5957	265	3	5307-01-315-3597	36	18
5340-01-314-5957	268	40	5307-01-315-3597	38	18
5340-01-314-5957	270	39	5307-01-315-3597	42	2
5340-01-314-5957	286	14	5307-01-315-3597	475	15
5340-01-314-5957	287	5	5340-01-315-3611	329	10

CROSS REFERENCE INDEXES

NATIONAL STOCK NUMBER INDEX

STOCK NUMBER	FIGURE NO	ITEM NO	STOCK NUMBER	FIGURE NO	ITEM NO
2540-01-315-3762	395	6	5306-01-316-2433	234	1
5340-01-315-4120	379	47	5306-01-316-2433	239	10
4010-01-315-4179	314	15	4720-01-316-2538	366	22
5340-01-315-4955	379	15	4720-01-316-2538	368	39
5305-01-315-7066	239	2	4720-01-316-2538	386	8
5305-01-315-7066	402	4	2590-01-316-2581	319	4
5306-01-315-7087	239	3	4520-01-316-2585	387	9
5306-01-315-7088	234	7	2540-01-316-2597	387	6
5360-01-315-7211	316	11	2520-01-316-2630	178	13
5360-01-315-7211	320	10	2520-01-316-2630	436	6
5360-01-315-7211	320	22	2540-01-316-2697	396	9
5360-01-315-7211	324	13	5340-01-316-2959	329	15
5360-01-315-7211	324	27	5307-01-316-2986	329	14
5360-01-315-7211	375	18	2540-01-316-6624	321	KIT
5360-01-315-7211	378	18	5365-01-316-8966	382	2
5360-01-315-7212	316	11	5365-01-316-8985	392	5
5360-01-315-7212	320	10	5340-01-317-0147	181	17
5360-01-315-7212	320	22	5305-01-317-0409	393	6
5360-01-315-7212	324	13	5305-01-317-0409	395	20
5360-01-315-7212	324	27	2590-01-317-0534	389	13
5360-01-315-7212	375	18	2590-01-317-0535	389	13
5360-01-315-7212	378	18	2540-01-317-0728	372	KIT
5340-01-315-7223	72	23	2540-01-317-0820	390	1
5340-01-315-7223	73	10	4520-01-317-0929	387	3
7690-01-315-8539	354	3	2540-01-317-1024	390	10
7690-01-315-8540	380	11	4710-01-317-1044	387	14
5305-01-315-8649	69	33	4710-01-317-1045	385	7
5305-01-315-8649	434	4	4710-01-317-1046	384	2
5305-01-315-8649	435	9	5340-01-317-1470	181	4
2590-01-315-9128	188	8	5340-01-317-2675	388	17
5305-01-315-9512	392	2	2540-01-317-3309	379	28
5305-01-315-9524	395	15	2540-01-317-3350	396	5
5305-01-315-9683	397	4	2590-01-317-3952	395	2
5305-01-315-9882	395	24	2590-01-317-3953	383	4
5305-01-315-9882	397	12	5310-01-317-4022	391	6
2590-01-316-0084	185	9	2540-01-317-4289	393	10
2590-01-316-0084	186	14	2540-01-317-4289	395	10
2590-01-316-0084	187	13	2590-01-317-4854	393	8
2510-01-316-0216	389	8	2590-01-317-4855	395	18
4710-01-316-0222	11	11	2590-01-317-4856	383	3
2540-01-316-0892	452	4	2930-01-317-5358	28	5
5306-01-316-1456	234	12	5330-01-317-5392	393	5
5340-01-316-1507	329	17	5330-01-317-5392	395	22
4030-01-316-1551	183	2	5330-01-317-5393	395	4
4030-01-316-1551	185	12	6150-01-317-5853	72	25
4030-01-316-1551	187	16	6150-01-317-5853	434	1
4030-01-316-1551	188	12	6150-01-317-5853	435	1

CROSS REFERENCE INDEXES

NATIONAL STOCK NUMBER INDEX

STOCK NUMBER	FIGURE NO	ITEM NO	STOCK NUMBER	FIGURE NO	ITEM NO
5340-01-317-7501	389	5	2910-01-323-0123	368	35
2590-01-317-7561	395	23	6220-01-323-0431	396	13
9905-01-317-7986	380	10	2990-01-323-2562	365	7
9905-01-317-7987	380	6	2590-01-323-5153	155	9
5310-01-317-8164	395	8	5306-01-323-5534	198	22
2510-01-317-8258	396	1	5306-01-323-5534	331	4
2590-01-317-8292	395	3	5306-01-323-5535	198	22
5340-01-317-9086	391	7	5306-01-323-5535	207	8
5340-01-318-0212	433	11	5306-01-323-5535	280	50
5330-01-318-1998	395	5	5306-01-323-5535	281	50
5340-01-318-2040	391	2	9905-01-324-0886	396	7
5340-01-318-2041	392	10	5330-01-324-0906	121	2
5365-01-318-2066	388	4	5330-01-324-0906	122	6
5340-01-318-2180	397	3	5340-01-324-1076	431	6
5930-01-318-2809	380	8	5977-01-324-6323	45	45
5340-01-318-3366	433	3	6150-01-324-6355	387	18
5340-01-318-4893	397	6	6150-01-324-6356	383	9
5310-01-318-5237	389	4	5330-01-324-8260	172	19
2540-01-318-9229	230	8	4720-01-325-0204	399	17
5330-01-318-9780	395	7	5340-01-325-2891	433	6
2815-01-319-1433	1	2	4720-01-325-6985	370	4
2510-01-319-5952	397	10	2510-01-325-8741	375	8
5330-01-319-7302	387	10	2510-01-325-8741	375	15
2510-01-319-9384	395	17	5365-01-326-1153	368	25
5340-01-319-9426	391	9	5342-01-326-2583	365	19
5340-01-320-1079	379	45	2910-01-326-9221	10	2
5340-01-320-2060	393	2	5310-01-327-0387	337	15
5340-01-320-2060	395	13	3040-01-327-1426	431	4
2910-01-320-6645	366	37	2590-01-328-2904	437	KIT
2910-01-320-6645	384	11	2540-01-329-8074	323	KIT
5340-01-320-8662	387	11	2540-01-329-8649	378	1
2540-01-320-8731	401	KIT	4730-01-329-9151	29	11
2540-01-320-8918	388	13	3950-01-329-9890	314	29
3030-01-321-4482	37	19	2590-01-329-9910	314	2
3030-01-321-4482	475	27	2510-01-330-2249	378	11
2530-01-321-4497	436	KIT	2510-01-330-2250	378	11
1005-01-321-6774	431	KIT	2590-01-330-6102	314	13
5330-01-321-8622	BULK	53	2540-01-330-6169	319	1
5975-01-322-6373	396	8	2540-01-330-6170	322	1
4730-01-322-9160	302	4	2540-01-330-6171	316	4
4730-01-322-9160	305	6	2540-01-330-6172	320	2
4730-01-322-9160	306	4	2540-01-330-6173	316	1
4730-01-322-9160	309	5	2510-01-330-6174	316	7
4730-01-322-9871	368	15	2510-01-330-6174	320	19
2990-01-322-9879	368	17	2510-01-330-6175	316	7
2990-01-322-9880	365	11	2510-01-330-6175	320	19
2990-01-322-9881	368	13	2510-01-330-6176	320	5

CROSS REFERENCE INDEXES

NATIONAL STOCK NUMBER INDEX

STOCK NUMBER	FIGURE NO	ITEM NO	STOCK NUMBER	FIGURE NO	ITEM NO
2540-01-330-6177	320	1	4710-01-335-7523	277	15
2510-01-330-6576	320	5	5331-01-335-7592	19	8
5330-01-330-9645	118	13	2510-01-335-7799	197	25
5305-01-331-6284	437	3	5331-01-335-8878	167	16
5330-01-331-9995	118	1	2540-01-336-0791	378	4
2510-01-332-0128	271	1	5340-01-336-3004	251	27
2510-01-332-0129	271	1	5340-01-336-3004	252	27
5340-01-332-7515	208	8	5340-01-336-3004	253	22
5340-01-332-7516	437	9	5340-01-336-3004	254	27
5340-01-332-7599	331	19	5340-01-336-3004	255	21
5340-01-332-7599	332	23	2530-01-336-3127	167	19
5340-01-332-7599	370	5	5331-01-336-3236	73	13
5340-01-332-7602	225	6	2530-01-336-5740	167	14
5340-01-332-7602	226	39	5306-01-336-7175	167	15
5310-01-333-0060	283	16	2540-01-337-0242	323	5
5340-01-333-0162	346	3	2590-01-337-4071	433	KIT
3030-01-333-2286	37	19	5310-01-337-7034	42	12
2590-01-333-2999	377	12	6220-01-338-2059	65	9
5310-01-333-5245	62	29	2530-01-338-2730	167	18
5310-01-333-5245	379	50	2540-01-338-8081	402	KIT
5310-01-333-5245	485	27	2510-01-338-8087	209	KIT
5320-01-333-5545	197	21	5995-01-339-0190	282	1
5320-01-333-5545	199	47	5995-01-339-0190	435	4
5340-01-333-5851	234	8	6250-01-339-6271	65	11
4710-01-333-5995	277	42	5330-01-340-5627	205	6
5340-01-333-6038	197	3	5940-01-341-7689	93	2
2530-01-333-6068	157	5	5330-01-341-8963	206	6
2610-01-333-7632	168	1	6145-01-341-9591	BULK	67
2530-01-333-8263	157	5	2590-01-342-4918	433	KIT
5330-01-334-2834	205	5	2510-01-344-4169	271	18
5330-01-334-2834	206	5	5310-01-344-8250	16	32
5340-01-334-2887	239	5	2510-01-345-4365	271	1
5340-01-334-4241	234	20	4730-01-346-1063	167	24
2540-01-334-4333	403	18	2520-01-346-1374	137	4
2640-01-334-9453	167	17	5331-01-346-3806	167	25
5120-01-335-1094	505	1	4730-01-347-7342	385	6
5120-01-335-1096	505	1	5930-01-347-9216	327	10
5120-01-335-1099	505	1	5999-01-348-0302	40	19
5120-01-335-1100	505	1	5920-01-348-0303	40	32
6150-01-335-3087	39	79	3120-01-348-3364	40	20
2510-01-335-4170	199	55	3110-01-348-4867	40	10
2510-01-335-4171	197	12	3110-01-348-4867	43B	33
2540-01-335-4482	199	3	4730-01-348-6231	388	6
2640-01-335-4583	167	23	2510-01-348-6670	271	1
5120-01-335-5847	505	6	5315-01-348-6880	40	45
2510-01-335-7343	283	17	5365-01-348-6971	40	34
2510-01-335-7363	227	10	5306-01-348-8310	40	24

CROSS REFERENCE INDEXES

NATIONAL STOCK NUMBER INDEX

STOCK NUMBER	FIGURE NO	ITEM NO	STOCK NUMBER	FIGURE NO	ITEM NO
5310-01-348-8313	40	38	2520-01-357-5056	148	25
5310-01-348-8314	40	28	4730-01-357-5651	388	2
5310-01-348-8360	40	44	4730-01-357-6523	385	5
5310-01-348-8360	43B	2	2510-01-357-8789	187	4
5310-01-348-8384	40	43	2510-01-357-8789	441	4
5310-01-348-8385	40	36	2510-01-357-8789	456	1
5310-01-348-8386	40	33	2910-01-357-8798	15	1
5310-01-348-8392	40	29	2540-01-357-8939	288	1
5310-01-348-8393	40	25	5120-01-357-9123	501	19
5310-01-348-8398	40	51	2530-01-357-9708	164	1
5310-01-348-8398	43B	13	2530-01-357-9776	163	7
6115-01-349-5320	40	5	4710-01-357-9968	161	6
4140-01-350-0839	40	41	5975-01-358-0021	40	27
5975-01-350-1987	40	21	2510-01-358-1176	187	7
5975-01-350-1987	43B	37	2510-01-358-1176	441	12
7690-01-350-2094	358	4	2510-01-358-1176	456	21
5310-01-350-4257	40	22	2510-01-358-1177	187	7
5310-01-350-4257	43B	46	2510-01-358-1177	441	12
2510-01-350-4949	203	3	2510-01-358-1177	456	21
5970-01-350-5646	40	31	2510-01-358-1178	187	4
5310-01-350-8549	40	23	2510-01-358-1178	441	4
5310-01-350-8549	43B	36	2510-01-358-1178	456	1
2540-01-350-9380	379	18	4710-01-358-1943	159	1
5306-01-351-7742	345	23	4710-01-358-1943	160	12
5306-01-351-7742	348	22	4710-01-358-2127	13	21
2930-01-353-5794	31	3	4710-01-358-2127	14	7
5355-01-353-6934	327	12	2520-01-358-3160	140	4
2510-01-354-0417	271	18	2520-01-358-3160	147	4
5320-01-354-2547	220	5	5365-01-358-4641	130	17
2540-01-354-4291	315	1	5365-01-358-4642	132	24
2540-01-354-4291	444	1	5360-01-358-5420	132	28
5330-01-355-3686	4	24	5325-01-358-5450	129	5
2520-01-356-9189	136	6	5310-01-358-5461	129	16
2520-01-356-9197	127	3	5340-01-358-5588	180	6
5325-01-357-1080	316	18	4720-01-358-6100	130	13
5325-01-357-1080	320	33	4710-01-358-6397	13	22
5325-01-357-1080	324	39	4710-01-358-6397	14	8
5360-01-357-2413	192	1	5360-01-358-6563	129	29
5120-01-357-3629	501	16	5360-01-358-6564	132	26
5120-01-357-3630	501	17	5340-01-358-6697	74	3
5120-01-357-3631	501	18	3040-01-358-7034	488	17
5120-01-357-3632	501	12	5340-01-358-7595	180	26
5120-01-357-3633	501	15	2590-01-358-7643	132	18
5340-01-357-3996	15	10	2590-01-358-7644	132	19
5340-01-357-3996	16	9	2520-01-358-7698	131	5
2520-01-357-5043	136	16	5340-01-358-7940	132	29
2520-01-357-5044	137	18	5325-01-358-7958	129	10

CROSS REFERENCE INDEXES

NATIONAL STOCK NUMBER INDEX

STOCK NUMBER	FIGURE NO	ITEM NO	STOCK NUMBER	FIGURE NO	ITEM NO
5325-01-358-7959	129	17	4730-01-359-2217	130	14
5325-01-358-7960	129	20	3020-01-359-2529	130	43
5325-01-358-7961	130	42	3020-01-359-2529	130	47
5325-01-358-7962	130	34	6220-01-359-2870	61	10
5310-01-358-7974	130	4	4710-01-359-2956	15	6
5310-01-358-7975	130	7	4710-01-359-2956	16	6
5310-01-358-7978	132	25	4710-01-359-2956	366	18
5340-01-358-8000	129	30	5306-01-359-4529	129	1
4710-01-358-8410	130	12	5306-01-359-4530	130	2
4730-01-358-8538	175A	1	5305-01-359-4586	129	27
3040-01-358-8596	132	17	3110-01-359-6669	130	5
3020-01-358-8601	130	48	3120-01-359-6760	129	6
4320-01-358-8608	130	40	3120-01-359-6764	132	27
3020-01-358-8656	130	9	5970-01-359-7836	98	12
3020-01-358-8657	130	15	5340-01-359-8819	446	4
2520-01-358-8658	130	10	3110-01-359-8858	130	45
3020-01-358-8659	130	33	5340-01-359-8933	440	20
3020-01-358-8661	130	8	5365-01-359-9406	440	19
3020-01-358-8662	130	16	5340-01-359-9474	440	8
3040-01-358-8690	129	13	4820-01-359-9489	159	2
3040-01-358-8691	130	44	4820-01-359-9489	160	11
3040-01-358-8692	130	18	5306-01-360-0926	438	4
2520-01-358-8700	132	20	3120-01-360-0977	130	36
2520-01-358-8701	132	13	3130-01-360-1050	129	15
3040-01-358-8708	129	24	3130-01-360-1051	129	21
2520-01-358-8878	130	3	3130-01-360-1051	130	36
2520-01-358-8879	130	1	5306-01-360-1123	283	21
2520-01-358-8880	129	2	5306-01-360-1123	438	17
2520-01-358-8881	129	9	5306-01-360-1124	446	11
2520-01-358-8883	132	22	5306-01-360-1125	441	13
5340-01-358-9301	153	12	5306-01-360-1125	442	10
7690-01-358-9391	361	11	5306-01-360-1125	453	19
5330-01-358-9532	128	59	5306-01-360-1126	442	14
5330-01-358-9532	129	31	5306-01-360-1127	442	17
5330-01-358-9533	130	31	5306-01-360-1128	188	37
5330-01-358-9540	130	30	5306-01-360-1128	442	1
5330-01-358-9541	130	11	5306-01-360-1128	453	12
5331-01-358-9545	129	28	5306-01-360-1129	440	7
5305-01-359-0167	74	13	5306-01-360-1130	440	16
3040-01-359-1116	129	8	5305-01-360-1136	33	15
3040-01-359-1117	129	19	5340-01-360-1188	446	34
3040-01-359-1118	130	37	5340-01-360-1189	445	6
3040-01-359-1119	130	20	3120-01-360-1202	129	12
3020-01-359-1136	130	6	5340-01-360-1727	446	2
3020-01-359-1211	129	18	5340-01-360-1784	446	35
5330-01-359-1292	130	35	5340-01-360-1886	440	23
2510-01-359-2076	198	26	5340-01-360-1887	446	29

CROSS REFERENCE INDEXES

NATIONAL STOCK NUMBER INDEX

STOCK NUMBER	FIGURE NO	ITEM NO	STOCK NUMBER	FIGURE NO	ITEM NO
5340-01-360-2020	442	12	6220-01-362-5211	97	9
5340-01-360-2021	440	15	6150-01-362-5229	81	8
5340-01-360-2053	440	14	5310-01-362-6171	43B	10
4720-01-360-2380	27	7	5320-01-362-6195	247	7
2590-01-360-2417	446	25	2590-01-363-2084	442	19
2540-01-360-2482	442	16	2920-01-363-5173	40	2
5340-01-360-2979	446	17	2590-01-364-1534	442	15
3040-01-360-4448	130	29	2510-01-364-3120	KITS	46
5340-01-360-4909	446	7	3020-01-364-3398	148	27
5340-01-360-4909	447	1	9905-01-364-7342	354	12
5330-01-360-5271	105	17	4240-01-365-0982	307	15
2590-01-360-5411	442	19	4240-01-365-0982	308	3
2590-01-360-5412	442	11	5340-01-365-8796	287	4
2590-01-360-5413	442	6	9905-01-365-8849	448	11
2590-01-360-5414	442	6	5140-01-366-0642	512	8
3120-01-360-5960	130	46	5120-01-366-0893	512	1
5340-01-360-9070	446	33	5120-01-366-0894	512	9
2590-01-360-9536	442	11	5120-01-366-0895	512	5
2590-01-360-9537	442	9	5120-01-366-2520	512	2
5310-01-361-1152	438	9	6150-01-366-2916	445	12
5310-01-361-1163	439	7	5310-01-366-3539	33A	10
5310-01-361-1163	462	8	5120-01-366-4713	512	6
5310-01-361-1163	465	1	5120-01-366-6260	512	7
5310-01-361-1163	485	25	2510-01-366-6968	271	18
5340-01-361-1212	440	18	2510-01-366-6969	271	18
5120-01-361-3101	501	14	5120-01-366-9468	512	3
6220-01-361-5084	67	8	5340-01-367-2070	266	14
5305-01-361-5353	225	52	5120-01-367-3536	510	8
5305-01-361-5353	306	8	5120-01-367-3582	505	2
5305-01-361-5353	346	5	5120-01-367-3585	505	2
5305-01-361-5353	410	23	2510-01-369-3230	227	27
5305-01-361-5353	445	4	5306-01-371-4685	198	15
5305-01-361-5353	451	3	2640-01-371-8332	KITS	49
5340-01-361-6658	184	3	6220-01-372-3883	61	4
5340-01-361-7879	448	9	5999-01-372-5601	39	80
5340-01-361-7879	449	9	5999-01-372-5601	41	20
2530-01-361-8012	KITS	53	5999-01-372-5601	475	26
5330-01-361-8013	KITS	50	6680-01-372-5748	506	3
5330-01-361-8014	KITS	51	2510-01-372-9734	228	4
5330-01-361-8015	KITS	52	2510-01-373-0131	228	3
2590-01-361-8087	442	3	5925-01-373-1034	367	12
2590-01-361-8088	442	3	2510-01-373-2783	228	1
6150-01-361-8129	74	15	2510-01-373-2784	228	5
2540-01-361-8206	187	1	5120-01-373-4981	507	5
2540-01-361-8206	441	1	5120-01-373-4982	506	1
2510-01-361-8213	199	39	5120-01-373-4984	508	5
9905-01-362-2014	355	4	5120-01-373-4985	508	2

CROSS REFERENCE INDEXES

NATIONAL STOCK NUMBER INDEX

STOCK NUMBER	FIGURE NO	ITEM NO	STOCK NUMBER	FIGURE NO	ITEM NO
5120-01-373-4987	507	3	5365-01-381-6110	148	20
5120-01-373-4988	507	4	5365-01-381-6112	148	20
5120-01-373-4989	506	2	5365-01-381-6113	148	20
5120-01-373-5983	508	3	5365-01-381-6120	148	20
5120-01-373-5984	508	4	5365-01-381-6122	148	20
5120-01-373-5985	506	4	5365-01-381-6145	148	20
2510-01-373-7877	228	7	5365-01-381-6151	148	20
2510-01-373-8445	228	8	5365-01-381-6154	148	20
5120-01-373-8836	507	2	5365-01-381-6158	148	20
5120-01-373-8840	508	1	5365-01-381-6164	148	20
2510-01-374-0000	228	9	5365-01-381-6165	148	20
5310-01-374-4512	261	3	5365-01-381-6174	148	20
2510-01-376-1092	368	31	5365-01-381-6175	148	20
3120-01-377-5220	314	12	5365-01-381-6188	148	20
2590-01-377-6819	250	7	5365-01-381-6197	148	20
5365-01-378-1755	104	12	5365-01-381-6210	148	20
5340-01-378-5201	69	16	5365-01-381-6211	148	20
2510-01-378-5615	266	10	5365-01-381-6223	148	20
5340-01-378-7525	69	17	5365-01-381-6226	148	20
2920-01-378-8035	434	KITS	5365-01-381-6229	148	20
5330-01-378-8572	4	32	5365-01-381-6240	148	20
5330-01-379-1139	122	4	5365-01-381-6250	148	20
5331-01-380-2118	176A	13	5365-01-381-6258	148	20
5305-01-380-3395	1	5	5365-01-381-6261	148	20
5305-01-380-3395	2	6	5365-01-381-6276	148	20
5340-01-380-4561	153	1	5365-01-381-6278	148	20
5365-01-380-5345	148	20	5365-01-381-6292	148	20
5365-01-380-7340	231	23	5365-01-381-6303	148	20
5305-01-380-9163	333	14	5365-01-381-6313	148	20
5340-01-381-1266	401	19	5365-01-381-6317	148	20
5365-01-381-1783	401	7	5365-01-381-6332	148	20
5340-01-381-1808	140	9	2540-01-381-8392	231	1
5330-01-381-1810	327	33	2540-01-381-8988	231	18
5340-01-381-2045	401	17	2540-01-381-9331	231	20
2540-01-381-2079	231	19	5365-01-381-9582	148	20
5365-01-381-2215	303	8	5365-01-381-9588	148	20
5340-01-381-2248	333	16	5365-01-382-0973	148	17
5305-01-381-2296	231	11	5365-01-382-0986	454	5
5305-01-381-2305	231	2	5365-01-382-1058	148	17
5365-01-381-4487	148	17	5365-01-382-1132	148	17
5365-01-381-5166	148	20	5365-01-382-1135	148	17
5365-01-381-5174	148	20	5365-01-382-1157	148	17
5310-01-381-5328	231	24	5365-01-382-1159	148	17
5310-01-381-5328	454	4	5365-01-382-1162	148	17
5365-01-381-6076	148	20	5365-01-382-1166	148	17
5365-01-381-6080	148	20	5365-01-382-1170	148	17
5365-01-381-6086	148	20	5365-01-382-1171	148	17

CROSS REFERENCE INDEXES

NATIONAL STOCK NUMBER INDEX

STOCK NUMBER	FIGURE NO	ITEM NO	STOCK NUMBER	FIGURE NO	ITEM NO
5365-01-382-1177	148	17	5340-01-385-0057	377	3
5365-01-382-1178	231	30	9905-01-385-2633	354	12
5365-01-382-1181	148	17	9905-01-385-2639	354	12
5365-01-382-1235	148	17	2540-01-385-7497	289	8
5365-01-382-1240	148	17	2990-01-385-8988	401	5
5365-01-382-1273	148	17	2540-01-385-9000	327	31
4730-01-382-3165	302	1	2540-01-385-9031	327	37
4730-01-382-3165	305	1	2930-01-385-9108	333	19
5365-01-382-3447	148	17	2520-01-386-3384	137	19
5365-01-382-3676	148	17	2530-01-386-5499	167	18
5365-01-382-3693	148	17	5340-01-386-6067	292	4
5365-01-382-3694	148	17	2540-01-386-8790	327	32
5365-01-382-3700	148	17	5305-01-386-9052	431	8
5365-01-382-3710	148	17	5340-01-387-0090	231	5
5365-01-382-3715	148	17	9905-01-387-1145	354	12
5365-01-382-3718	148	17	9905-01-387-1146	354	12
5365-01-382-3726	148	17	9905-01-387-2746	354	12
5310-01-382-5031	142	19	9905-01-387-2752	354	12
5310-01-382-5031	143	26	9905-01-387-2761	354	12
5310-01-382-5031	150	19	9905-01-387-2762	354	12
5310-01-382-5031	151	26	2540-01-387-5578	440	13
7690-01-382-8471	354	14	5306-01-387-7457	270	31
2520-01-382-8728	138	1	3120-01-388-1527	327	8
2990-01-382-8796	401	6	5325-01-388-2363	456	10
2520-01-382-8874	138	1	5365-01-388-4449	148	17
5340-01-383-0462	21	3	5310-01-388-6205	398	7
5365-01-383-1925	138	5	5310-01-388-7420	274	19
5365-01-383-1925	145	5	5340-01-388-9512	KITS	81
2520-01-383-2387	145	1	2540-01-389-0984	286	7
5340-01-383-2397	401	10	5120-01-389-9992	501	22
5365-01-383-3722	304	6	5305-01-390-0547	484	4
2540-01-383-5232	227	2	5310-01-390-5105	43B	40
2510-01-383-5444	74	6	2540-01-390-5711	370	3
2510-01-383-5444	283	28	5120-01-391-5131	501	9
2540-01-383-5660	231	4	5331-01-392-0830	73	15
2990-01-383-5689	401	16	5331-01-392-1793	73	11
2530-01-383-5740	169	9	9905-01-392-5794	355	4
2540-01-383-6470	286	24	9905-01-392-5795	355	4
6160-01-384-0325	231	32	9905-01-392-5796	355	4
2540-01-384-1012	227	26	9905-01-392-5797	355	4
2540-01-384-1028	227	27	9905-01-392-5798	355	4
4720-01-384-1212	301	5	9905-01-392-5799	355	4
5935-01-384-2610	73	1	9905-01-392-5800	355	4
6160-01-384-3922	231	31	2520-01-392-8435	110	11
9905-01-384-5311	354	12	2520-01-392-8435	112	17
2530-01-384-7154	169	13	9905-01-393-1830	355	4
5340-01-384-9987	4	18	9905-01-393-1833	355	4

CROSS REFERENCE INDEXES

NATIONAL STOCK NUMBER INDEX

STOCK NUMBER	FIGURE NO	ITEM NO	STOCK NUMBER	FIGURE NO	ITEM NO
9905-01-393-1834	355	4	5340-01-395-0812	369	3
9905-01-393-3794	354	8	5340-01-395-1244	365	24
9905-01-393-3795	355	4	2590-01-395-2228	140	3
9905-01-393-5622	354	12	2590-01-395-2229	140	6
9905-01-393-5623	354	12	2540-01-395-2230	372	7
5305-01-393-6311	135	7	5310-01-395-3549	213	22
5305-01-393-6311	160	22	5310-01-395-3549	262	16
5305-01-393-6311	162	10	2540-01-395-3979	372	3
5305-01-393-6311	487A	12	4710-01-395-3982	366	11
5305-01-393-6311	487C	2	2540-01-395-4202	370	6
5305-01-393-6311	487D	3	2540-01-395-7999	188	3
9905-01-393-7128	355	4	5310-01-395-8747	30	9
5305-01-393-7801	210	11	5310-01-395-8747	35	25
5330-01-393-9101	9	2	5310-01-395-8747	36	20
9905-01-393-9357	354	12	5310-01-395-8747	37	15
5340-01-393-9371	369	11	5310-01-395-8747	38	20
5365-01-394-0440	370	14	5310-01-395-8747	41	11
5365-01-394-2394	369	6	5310-01-395-8747	42	11
5340-01-394-2408	155	15	5310-01-395-8747	77	8
5340-01-394-2409	390	12	5310-01-395-8747	472	1
5305-01-394-3543	370	16	5310-01-395-8747	474	5
4720-01-394-3747	178	18	5310-01-395-8747	475	13
2530-01-394-3748	KITS	56	5310-01-395-8747	476	21
2990-01-394-3751	365	12	5310-01-395-8747	490	8
2540-01-394-4454	375	KIT	2540-01-395-8771	402	KIT
2540-01-394-4787	402	6	2540-01-395-8785	375	1
2540-01-394-4788	402	6	6150-01-396-0906	386	2
2540-01-394-4792	402	6	2590-01-396-1422	232	1
4720-01-394-6166	370	2	2590-01-396-1424	232	1
2540-01-394-6167	368	11	5340-01-396-3950	43B	7
2530-01-394-6168	KITS	37	5935-01-396-3991	73	14
4710-01-394-6169	366	15	5325-01-396-4320	43B	18
4720-01-394-6170	368	46	2590-01-396-5007	233	3
4720-01-394-6170	370	8	2540-01-396-7756	402	1
5340-01-394-7288	370	22	2540-01-396-7757	402	1
5340-01-394-7853	369	9	2540-01-396-7759	402	1
2590-01-394-8134	147	3	5340-01-396-8322	377	3
4730-01-394-8345	368	37	3130-01-396-8388	43B	20
5340-01-394-8496	155	20	5310-01-396-8392	270	23
4140-01-394-8583	43B	42	5935-01-397-0201	86	28
5310-01-394-9280	370	10	5330-01-397-0374	105	14
2990-01-394-9670	365	9	5340-01-397-1388	262	1
2590-01-394-9672	234	4	4140-01-397-2228	43B	38
2590-01-394-9673	233	3	9905-01-397-3196	370	12
2540-01-394-9679	402	6	5935-01-397-3813	73	5
2540-01-394-9682	402	6	9905-01-397-6974	354	12
2540-01-394-9683	402	6	5330-01-398-3724	KITS	22

CROSS REFERENCE INDEXES

NATIONAL STOCK NUMBER INDEX

STOCK NUMBER	FIGURE NO	ITEM NO	STOCK NUMBER	FIGURE NO	ITEM NO
2520-01-398-4589	105	15	5340-01-408-6459	210	12
4330-01-398-8484	6	7	5340-01-408-6460	329	15
4730-01-399-0241	178	17	5340-01-408-6460	461	7
2540-01-399-0785	402	1	5340-01-408-6462	210	5
2920-01-399-0794	43B	43	5180-01-408-7050	511	KIT
2990-01-399-1023	105	9	5120-01-408-7051	510	15
2520-01-399-4691	105	1	5120-01-408-7051	510	21
2930-01-405-9885	26	1	5315-01-408-7089	261	16
5315-01-406-5019	353	6	5340-01-408-7091	261	13
5365-01-406-6336	455	4	5310-01-408-7138	462	4
2815-01-406-6675	1	1	6220-01-408-7785	49	1
5342-01-406-6962	196	10	5325-01-408-7969	115	11
5342-01-406-6962	196	15	5325-01-408-7970	115	16
4010-01-406-6963	353	8	5325-01-408-7971	115	8
5340-01-406-6964	453	13	5325-01-408-7972	115	10
5340-01-406-6965	453	8	5325-01-408-7973	120	2
5340-01-406-7413	455	8	5360-01-408-7977	122	15
5340-01-406-7418	453	6	5315-01-408-8020	108	8
2990-01-406-8738	54	5	5120-01-408-8173	511	13
5310-01-406-9129	73	16	5365-01-408-8507	261	2
2590-01-406-9821	252	8	5340-01-408-8508	261	9
2920-01-407-0532	36	4	5340-01-408-8509	261	10
2920-01-407-0532	43B	1	5340-01-408-8512	261	12
5977-01-407-2847	39	63	5340-01-408-8522	113	11
2540-01-407-3296	369	5	5340-01-408-8522	114	16
2530-01-407-3977	KITS	55	5340-01-408-8522	115	25
2510-01-407-6036	316	7	5340-01-408-8523	188	16
2510-01-407-6036	320	19	5340-01-408-8525	KITS	30
2510-01-407-6037	316	7	5340-01-408-8526	455	7
2510-01-407-6037	320	19	5340-01-408-8529	188	16
5320-01-407-6239	197	16	5310-01-408-9593	127	6
5340-01-407-7192	453	17	5325-01-409-0211	127	8
5305-01-407-7713	318	9	5310-01-409-0897	462	14
5305-01-407-7713	485	23	4730-01-409-1204	125	18
5305-01-407-7713	487	2	4820-01-409-1218	119	22
7690-01-407-8248	370	15	2520-01-409-1602	134	3
2540-01-407-9241	316	4	5315-01-409-1662	488	24
5305-01-407-9487	199	6	5330-01-409-1664	114	15
5307-01-408-4029	33	20	5330-01-409-1665	122	30
5307-01-408-4029	37	18	2520-01-409-1751	115	9
5307-01-408-4029	475	25	2520-01-409-1758	115	18
5307-01-408-4029	476	23	2520-01-409-1767	115	19
2520-01-408-4785	102	1	5330-01-409-1981	BULK	57
5340-01-408-5851	16	30	4720-01-409-2499	125	8
5340-01-408-6456	329	17	3040-01-409-2500	101	9
5340-01-408-6456	461	2	3040-01-409-2501	134	4
5340-01-408-6458	210	6	3040-01-409-2502	101	3

CROSS REFERENCE INDEXES

NATIONAL STOCK NUMBER INDEX

STOCK NUMBER	FIGURE NO	ITEM NO	STOCK NUMBER	FIGURE NO	ITEM NO
4710-01-409-2504	125	4	5306-01-411-2338	464	6
4710-01-409-2508	125	3	5306-01-411-2342	101	7
2520-01-409-2509	120	1	2990-01-411-2728	24	1
2520-01-409-2512	127	3	2530-01-411-2729	169	6
2540-01-410-7034	454	KIT	2540-01-411-2733	188	7
2540-01-410-7035	454	KIT	2530-01-411-2735	169	8
5340-01-410-7036	453	KIT	2510-01-411-2736	199	26
2510-01-410-7169	199	27	2590-01-411-2737	254	8
5330-01-410-7229	KITS	20	2520-01-411-2749	110	12
3040-01-410-8054	101	5	4330-01-411-2786	119	17
2520-01-410-8067	KITS	93	5310-01-411-3422	49	5
3040-01-410-8068	107	13	5310-01-411-3422	352	1
3040-01-410-8071	107	22	5310-01-411-3422	459	1
2520-01-410-8072	110	13	5310-01-411-3422	481	9
2520-01-410-8077	KITS	95	5310-01-411-3422	484	11
2520-01-410-8079	115	5	2540-01-411-3946	166	10
6150-01-410-8215	511	12	2990-01-411-3947	24	14
5120-01-410-8216	510	4	2990-01-411-3954	24	5
2520-01-410-8241	115	27	2590-01-411-3958	210	9
5305-01-410-8386	210	16	2520-01-411-3959	115	21
5305-01-410-8386	269	9	2510-01-411-4175	210	8
5180-01-410-8467	511	KIT	3040-01-411-4191	66A	8
2540-01-410-8789	51	10	5305-01-411-4455	453	16
2590-01-410-8791	261	6	5305-01-411-4456	261	15
2540-01-410-8793	352	4	3120-01-411-5783	122	31
2540-01-410-8793	459	4	3110-01-411-5784	115	15
2540-01-410-8794	329	3	3120-01-411-5787	122	31
2540-01-410-8794	461	3	3990-01-411-6575	210	7
4010-01-410-9099	353	9	2540-01-411-7519	453	10
2815-01-410-9710	1	1	5307-01-411-8340	261	4
5330-01-410-9840	16	39	4710-01-411-8488	11	18
3040-01-410-9965	101	8	4710-01-411-8489	11	16
2590-01-410-9967	261	5	4710-01-411-8492	11	17
2590-01-410-9968	197	9	2910-01-412-0047	14	28
5325-01-411-0066	210	13	5340-01-412-0141	KITS	48
5325-01-411-0066	225	48	2990-01-412-0142	24	16
5325-01-411-0066	226	28	4710-01-412-0273	14	1
5325-01-411-0066	269	7	3110-01-412-0490	115	3
5325-01-411-0066	460	4	3010-01-412-0673	129	19
5330-01-411-0367	16	31	5340-01-412-0866	409	6
2510-01-411-0652	226	27	5340-01-412-0866	411	12
2510-01-411-0652	460	1	5340-01-412-0867	162	6
2510-01-411-0653	267	8	4710-01-412-1667	11	24
5306-01-411-1596	122	1	4710-01-412-1669	11	11
2910-01-411-2124	16	1	2540-01-412-2661	320	1
5307-01-411-2336	103	14	2590-01-412-2664	103	7
5306-01-411-2338	16	28	5930-01-412-2836	66A	2

CROSS REFERENCE INDEXES

NATIONAL STOCK NUMBER INDEX

STOCK NUMBER	FIGURE NO	ITEM NO	STOCK NUMBER	FIGURE NO	ITEM NO
6150-01-412-3192	76	1	5305-01-412-5994	152	12
5340-01-412-3563	105	26	5305-01-412-5995	16	29
2590-01-412-3862	186	5	5305-01-412-5995	464	5
5310-01-412-4013	15	24	6220-01-412-6420	97	10
5310-01-412-4013	16	26	2510-01-412-6761	320	5
5310-01-412-4013	23	21	5340-01-412-7514	188	10
5310-01-412-4013	30	4	2590-01-412-7564	186	10
5310-01-412-4013	35	4	6150-01-412-7774	511	11
5310-01-412-4013	36	14	2540-01-412-8610	186	1
5310-01-412-4013	38	14	2540-01-412-8610	456	3
5310-01-412-4013	99	17	4710-01-412-8611	11	10
5310-01-412-4013	144	5	4710-01-412-8615	11	28
5310-01-412-4013	144	15	5325-01-412-8806	115	12
5310-01-412-4013	152	5	5935-01-412-9146	76	7
5310-01-412-4013	152	15	2590-01-412-9560	186	10
5310-01-412-4013	174	15	2590-01-412-9570	186	5
5310-01-412-4013	202	36	2520-01-413-0080	136	16
5310-01-412-4013	203	19	5365-01-413-0275	266	22
5310-01-412-4013	270	20	5340-01-413-0282	186	12
5310-01-412-4013	276	11	5340-01-413-0282	188	31
5310-01-412-4013	278	10	6150-01-413-0853	81	19
5310-01-412-4013	283	7	5945-01-413-0886	50	12
5310-01-412-4013	33A	15	2540-01-413-1356	320	2
5310-01-412-4013	33B	3	4710-01-413-1360	14	5
5310-01-412-4013	341	7	2530-01-413-1365	144	6
5310-01-412-4013	38A	2	2530-01-413-1366	144	8
5310-01-412-4013	409	7	2530-01-413-1366	152	8
5310-01-412-4013	410	5	6150-01-413-1845	82	1
5310-01-412-4013	411	13	6150-01-413-1847	82	1
5310-01-412-4013	412	5	2520-01-413-1899	129	13
5310-01-412-4013	414	3	2520-01-413-1900	129	9
5310-01-412-4013	415	12	2520-01-413-1902	129	18
5310-01-412-4013	416	4	2520-01-413-1904	130	29
5310-01-412-4013	425	15	5310-01-413-2049	166	9
5310-01-412-4013	426	13	5330-01-413-2118	105	25
5310-01-412-4013	427	14	2520-01-413-2595	98	1
5310-01-412-4013	428	4	2520-01-413-2612	98	1
5310-01-412-4013	456	19	5340-01-413-2689	24	11
5310-01-412-4013	462	3	2520-01-413-2724	137	18
5310-01-412-4013	463	2	2510-01-413-3259	226	4
5310-01-412-4013	464	2	5310-01-413-3276	225	32
5310-01-412-4013	476	3	5310-01-413-3276	226	17
5310-01-412-4013	490A	5	5310-01-413-3276	461	1
2510-01-412-4969	180	15	2510-01-413-3360	225	12
4730-01-412-5213	14	26	2510-01-413-3618	267	8
4730-01-412-5216	14	12	2530-01-413-3653	143	1
5305-01-412-5994	144	12	2530-01-413-3653	151	1

CROSS REFERENCE INDEXES

NATIONAL STOCK NUMBER INDEX

STOCK NUMBER	FIGURE NO	ITEM NO
5330-01-413-3713	128	16
5330-01-413-3713	129	31
3040-01-413-4022	130	15
5340-01-413-4486	105	24
2520-01-413-5540	110	8
3120-01-413-6106	40	42
3120-01-413-6106	43B	44
6150-01-413-7946	70	2
6150-01-413-7946	481	2
2510-01-413-8045	182	17
3110-01-413-8094	129	6
4710-01-413-8230	162	3
2510-01-413-8872	320	5
2530-01-413-8886	KITS	58
6220-01-413-9828	97	9
5340-01-414-0701	71	1
2910-01-414-1272	10	2
2540-01-414-1275	24	4
5340-01-414-1454	319	5
5340-01-414-1454	320	3
5340-01-414-1454	322	4
5340-01-414-1454	324	4
5120-01-414-1849	511	14
5365-01-414-2895	143	31
5365-01-414-2895	151	31
5365-01-414-2902	143	23
5365-01-414-2902	151	23
2990-01-414-4072	24	28
5331-01-414-4161	115	22
5330-01-414-6607	122	2
2530-01-414-7844	144	6
2510-01-414-7846	226	4
5340-01-414-8959	77	23
6150-01-415-0535	41	1
5935-01-415-4322	76	18
5935-01-415-4392	75	20
5935-01-415-4392	76	20
5310-01-415-5245	76	19
5340-01-415-8672	210	2
5330-01-415-9612	130	20
5330-01-415-9613	130	30
5305-01-416-1269	130	27
5310-01-416-3009	130	28
5310-01-416-5447	101	6
6150-01-416-7899	41	6
6150-01-416-7899	70	12
6150-01-416-7899	474	10
6150-01-416-7899	475	4
5331-01-417-1043	167	16
5306-01-417-2467	167	15
5975-01-417-3267	435	KIT
6150-01-417-3411	69	35
2530-01-417-4908	167	2
2530-01-417-4908	167	14
3120-01-417-8178	130	31
2530-01-417-8450	167	8
2530-01-417-8450	167	19
2590-01-418-0310	457	KIT
2590-01-418-2135	457	KIT
6220-01-418-4404	63	8
2640-01-419-6200	167	27
2640-01-419-6202	167	17
2640-01-419-6205	KITS	57
5360-01-420-0480	458	8
5330-01-420-0705	16	40
3040-01-420-1887	130	18
2530-01-420-3837	170	6
2530-01-420-3839	170	2
2590-01-420-4179	485	KIT
2530-01-420-5180	170	7
2530-01-420-7892	152	6
2530-01-420-7893	152	6
2920-01-420-7894	33	14
2530-01-420-7895	144	20
2530-01-420-7895	152	20
2530-01-420-7904	157	23
2530-01-420-7904	158	13
2530-01-420-8025	KITS	10
2930-01-420-8622	32	4
2530-01-420-8634	144	20
2530-01-420-8634	152	20
2920-01-420-9968	38	4
2920-01-420-9968	40	1
5340-01-421-1415	138	15
5340-01-421-1415	145	15
5340-01-421-1423	138	4
5340-01-421-1423	145	4
5340-01-421-1782	281	52
2530-01-421-2563	170	10
2520-01-421-4588	139	1
2520-01-421-4589	146	1
5935-01-421-4801	83	27
5935-01-421-4801	88	47
2510-01-421-8067	227	18
5365-01-421-8382	138	14
5365-01-421-8382	145	14

CROSS REFERENCE INDEXES

NATIONAL STOCK NUMBER INDEX

STOCK NUMBER	FIGURE NO	ITEM NO	STOCK NUMBER	FIGURE NO	ITEM NO
5975-01-421-9718	BULK	64	3010-01-429-5333	458	29
5180-01-422-0138	510	11	5305-01-429-9137	43	26
5120-01-422-0139	510	14	5305-01-429-9149	35	21
5120-01-422-0173	510	12	5305-01-429-9149	36	1
5120-01-422-0219	510	13	5305-01-429-9149	38	1
2540-01-422-0253	327	1	5305-01-429-9149	472	10
5120-01-422-0334	510	9	5305-01-429-9149	475	10
5120-01-422-1293	511	6	5340-01-429-9352	210	1
5180-01-422-1294	511	1	5340-01-430-0037	458	43
5120-01-422-1297	511	2	5962-01-430-0182	50	4
5120-01-422-1300	510	5	5962-01-430-0208	50	4
5120-01-422-1301	511	5	5925-01-430-2318	48	3
5120-01-422-1302	511	3	5925-01-430-2318	469	13
5120-01-422-1306	511	4	2815-01-430-2599	4	22
5120-01-422-1308	510	6	5940-01-430-2764	50	6
5120-01-422-1310	510	16	4820-01-430-4132	14	13
5120-01-422-1313	510	3	2520-01-430-5294	KITS	62
5120-01-422-1318	510	19	5340-01-430-9239	321	25
5120-01-422-1324	510	20	5340-01-430-9239	376	21
5120-01-422-1326	510	7	5340-01-430-9240	321	25
5120-01-422-1329	510	10	5340-01-430-9240	376	21
5120-01-422-5406	510	17	2540-01-431-1338	KITS	59
5120-01-422-5411	510	18	2510-01-431-1339	460	KIT
5306-01-422-8649	66A	12	4820-01-431-2499	19	10
3040-01-422-9390	144	17	5945-01-431-5195	458	38
3040-01-422-9390	152	17	5935-01-431-5656	458	37
5120-01-423-0032	510	2	7220-01-431-8340	210	10
2530-01-423-1796	171	1	2540-01-431-9182	459	KIT
2520-01-423-1947	139	1	3120-01-432-1474	327	7
2510-01-423-2877	195	3	3020-01-432-2553	143	10
2520-01-423-5120	136	6	3020-01-432-2553	151	10
3120-01-424-1028	43B	44	2590-01-432-2691	457	17
5340-01-424-1300	138	2	5340-01-432-4870	189	5
5340-01-424-1300	145	2	5340-01-432-4876	182	12
3120-01-424-1525	43B	4	5340-01-432-4877	182	15
2540-01-424-7363	461	KIT	3990-01-432-5370	199	19
2540-01-425-1617	293	7	3990-01-432-5370	270	12
5330-01-425-5069	4	29	5310-01-432-6727	153	3
5340-01-426-3850	307	14	5310-01-432-6727	155	14
5340-01-426-3850	308	2	5310-01-432-6727	198	10
2990-01-426-4425	66A	11	5310-01-432-6727	208	4
4010-01-426-4536	458	39	5310-01-432-6727	227	31
4030-01-426-4537	458	41	5310-01-432-6727	261	11
5365-01-426-6643	458	26	5310-01-432-6727	321	15
5305-01-428-6635	458	46	5310-01-432-6727	325	17
2590-01-429-3008	486	KIT	5310-01-432-6727	326	12
6220-01-429-4596	47	13	5310-01-432-6727	332	2

CROSS REFERENCE INDEXES

NATIONAL STOCK NUMBER INDEX

STOCK NUMBER	FIGURE NO	ITEM NO	STOCK NUMBER	FIGURE NO	ITEM NO
5310-01-432-6727	377	8	3120-01-435-2495	458	34
5310-01-432-6727	486	4	3120-01-435-2560	458	30
5310-01-432-6727	487	10	2540-01-436-4175	231	6
5306-01-432-7900	33	12	2540-01-436-4175	454	1
5340-01-432-8678	183	20	5940-01-436-4561	93	15
5340-01-432-8680	140	9	5120-01-437-0480	511	8
5340-01-432-8681	160	25	5120-01-437-3658	505	5
5340-01-432-8681	162	19	5325-01-437-4175	319	7
5340-01-432-8681	487A	5	5306-01-437-8056	234	18
2540-01-432-9894	189	8	5306-01-437-8056	239	13
2540-01-432-9894	190	8	5306-01-437-8058	239	14
2540-01-432-9899	189	11	5340-01-437-8748	183	20
5340-01-433-0936	484	16	5340-01-437-8751	182	12
5340-01-433-2721	190	5	5365-01-438-1556	148	20
5340-01-433-2743	183	21	5340-01-438-4497	189	10
2510-01-433-4421	183	12	5980-01-438-7452	47	2
5340-01-433-6262	198	16	5980-01-438-8939	KITS	60
2530-01-433-8003	143	35	5310-01-439-1154	193	3
2530-01-433-8003	151	19	4730-01-439-2814	496	23
9905-01-433-8554	354	6	3040-01-439-3662	127	7
2530-01-433-8702	143	19	2520-01-439-5265	112	1
2530-01-433-8702	151	35	2520-01-439-5265	115	20
5305-01-433-9248	366	6	5340-01-439-5636	497	3
5365-01-434-0186	458	27	2815-01-439-5882	1	2
2520-01-434-0822	126	2	2815-01-439-6664	1	1
2520-01-434-0822	127	2	2815-01-439-6665	1	1
6105-01-434-1729	458	47	2520-01-439-6830	KITS	65
5340-01-434-1809	260	21	2540-01-439-7308	21	21
5340-01-434-2832	189	7	4710-01-439-8165	125	4
5340-01-434-2864	272	31	4710-01-439-8167	125	3
4710-01-434-3037	160	21	2590-01-439-8268	332	33
4710-01-434-3037	487A	13	2590-01-439-8268	370	28
4710-01-434-3151	160	19	2590-01-439-8268	411	20
4710-01-434-3151	162	20	3120-01-440-0043	456	8
4710-01-434-3151	487A	7	5940-01-440-0097	93	14
4710-01-434-3157	160	24	5962-01-440-0368	50	4
4710-01-434-3157	162	23	5340-01-440-1435	270	37
4710-01-434-3157	487B	7	5340-01-440-9678	11	25
4710-01-434-3159	162	21	5340-01-442-0308	125	21
4710-01-434-3159	487C	4	5330-01-442-2874	KITS	26
6110-01-434-5562	458	36	5340-01-442-4876	86	30
5340-01-434-8109	160	17	5940-01-442-6298	86	32
5340-01-434-8109	162	24	3020-01-442-7278	34	22
5340-01-434-8109	487A	5	5935-01-442-8569	86	22
5330-01-434-8611	30	2	6680-01-442-9413	478	1
3950-01-435-1014	458	31	6680-01-442-9413	488	2
3950-01-435-1632	458	28	4720-01-442-9875	160	1

CROSS REFERENCE INDEXES

NATIONAL STOCK NUMBER INDEX

STOCK NUMBER	FIGURE NO	ITEM NO	STOCK NUMBER	FIGURE NO	ITEM NO
4720-01-442-9875	487A	3	5935-01-445-5599	86	31
4720-01-443-3033	160	16	4720-01-445-5690	332	10
4720-01-443-3033	487A	2	4720-01-445-5705	332	41
2530-01-443-3405	KITS	66	2540-01-445-6029	379	17
4720-01-443-3481	162	9	2910-01-445-8097	368	30
4720-01-443-3481	487A	15	5305-01-446-0767	38	16
5340-01-443-6908	83	11	5305-01-446-0767	275	18
5340-01-443-6908	88	33	3040-01-446-3684	458	15
4720-01-443-8487	162	25	3040-01-446-3689	458	5
4720-01-443-8487	487A	16	3020-01-446-3695	458	25
5980-01-443-9093	63	8	3020-01-446-4387	458	12
5935-01-443-9124	86	29	5330-01-446-4696	458	20
5940-01-443-9580	95	4	5330-01-446-4696	458	32
4730-01-444-0701	30	13	9905-01-446-5768	355	4
3020-01-444-1359	458	10	9905-01-446-5769	354	12
3040-01-444-1756	458	2	9905-01-446-5770	354	12
3020-01-444-2311	175	3	9905-01-446-5771	355	4
2520-01-444-2711	120	5	5307-01-446-5930	103	14
2920-01-444-2749	38	11	2590-01-446-5957	458	19
5310-01-444-3084	77	16	2590-01-446-5962	458	16
2590-01-444-3317	33	9	9905-01-446-6187	355	4
3040-01-444-3350	456	13	5365-01-446-9408	128	22
2510-01-444-3360	16	21	5365-01-446-9408	130	25
2590-01-444-3399	456	14	6140-01-446-9498	69	23
3010-01-444-4018	458	11	4710-01-446-9570	11	1
3010-01-444-4019	458	14	5315-01-447-0492	108	4
3110-01-444-4020	458	7	5310-01-447-0968	108	3
3110-01-444-4100	458	13	2540-01-447-2236	332	14
2590-01-444-4365	37	16	5306-01-447-2568	33	13
2590-01-444-4365	475	19	2540-01-447-3457	231	9
6150-01-444-4437	44	12	3040-01-447-3797	107	7
2540-01-444-5340	332	20	2910-01-447-3911	16	13
3020-01-444-5447	38	8	5330-01-447-4762	103	3
3040-01-444-5640	51	11	5340-01-447-5839	78	3
4720-01-444-6433	332	11	9905-01-447-7799	354	12
2540-01-444-6615	332	19	3040-01-447-7995	108	2
2540-01-444-6642	332	30	3120-01-447-8658	458	21
2930-01-444-6649	31	3	3120-01-447-8658	458	33
2540-01-444-6655	332	22	3120-01-447-8663	458	18
6685-01-444-9478	30	1	5305-01-447-9227	332	31
7690-01-445-0444	456	2	5355-01-447-9655	98	4
7690-01-445-0456	361	11	2590-01-448-1105	315	7
4730-01-445-2358	30	15	2590-01-448-1105	457	12
4730-01-445-2358	30	17	5340-01-448-1213	488	8
6220-01-445-5058	49	10	4720-01-448-1655	331	3
5935-01-445-5144	86	33	5310-01-448-3219	332	32
5331-01-445-5285	458	4	5342-01-448-4215	104	18

CROSS REFERENCE INDEXES

NATIONAL STOCK NUMBER INDEX

STOCK NUMBER	FIGURE NO	ITEM NO	STOCK NUMBER	FIGURE NO	ITEM NO
5340-01-448-4245	472	13	2540-01-450-7686	319	1
5340-01-448-4316	278	2	5340-01-450-8693	487	4
5305-01-448-5074	458	17	4720-01-451-0894	370	7
5305-01-448-5080	458	22	5340-01-451-5903	487	14
3120-01-448-6268	456	12	2540-01-451-9345	379	20
3120-01-448-6269	456	9	5330-01-452-2474	12	27
2590-01-448-6351	456	7	2590-01-452-5034	369	13
3040-01-448-9611	104	2	2520-01-452-7569	126	2
9905-01-448-9783	355	4	2520-01-452-7569	127	3
9905-01-448-9784	355	4	2520-01-452-8365	126	1
9905-01-448-9786	354	12	4130-01-452-8773	466	KIT
9905-01-449-0476	355	4	3040-01-452-9065	129	8
5306-01-449-0510	235	11	2815-01-453-7403	1	1
5310-01-449-0628	50	7	2815-01-453-7404	1	1
2540-01-449-1718	379	20	4730-01-455-1220	467	3
5305-01-449-1983	169	31	4730-01-455-1231	466	3
2530-01-449-2495	143	22	4730-01-455-1231	467	2
2530-01-449-2495	151	22	4730-01-455-1259	466	2
6150-01-449-5445	44	23	4730-01-455-1276	466	1
6150-01-449-5445	480	25	2920-01-455-1626	474	KIT
2815-01-449-5585	4	6	4820-01-455-5020	467	8
5340-01-449-6854	41	8	4820-01-455-5021	466	8
5340-01-449-6854	474	15			
5340-01-449-7352	332	16	2815-01-455-8424	66A	14
5307-01-450-3072	127	11	5340-01-455-8700	439	KIT
5307-01-450-3072	180	9	2590-01-455-9123	332	13
2540-01-450-4015	319	1	2540-01-455-9308	332	18
2540-01-450-4017	316	1	2530-01-455-9330	KITS	63
2540-01-450-4018	316	4	4820-01-456-0172	19	23
2540-01-450-4019	320	1	5340-01-456-1500	98	9
2540-01-450-4020	322	1	5365-01-456-2032	143	30
2540-01-450-4021	316	1	5365-01-456-2032	151	30
2540-01-450-4024	322	1	2510-01-456-2277	194	3
2540-01-450-5477	320	2	2520-01-456-2736	114	6
2510-01-450-5479	316	7	5315-01-456-2737	117	7
2510-01-450-5479	320	19	5315-01-456-2738	117	7
2510-01-450-5479	324	24	5315-01-456-2739	117	7
2510-01-450-5480	316	7	5315-01-456-2740	117	7
2510-01-450-5480	320	19	5340-01-456-2741	117	19
2510-01-450-5480	324	24	5365-01-456-2742	117	10
7690-01-450-5481	354	12	5315-01-456-2743	117	7
2510-01-450-5482	320	5	5330-01-456-2744	120	10
2510-01-450-5482	324	10	5360-01-456-2745	117	13
2510-01-450-5483	320	5	5340-01-456-2751	163	9
2510-01-450-5483	324	10	4720-01-456-2955	162	7
5306-01-450-5947	230	14	2520-01-456-5014	115	6
5306-01-450-5947	235	15	4730-01-456-5446	366	9
5340-01-450-7521	387	1	5315-01-456-6254	117	7

CROSS REFERENCE INDEXES

NATIONAL STOCK NUMBER INDEX

STOCK NUMBER	FIGURE NO	ITEM NO	STOCK NUMBER	FIGURE NO	ITEM NO
2520-01-456-6256	120	20	4720-01-458-3326	466	10
4820-01-456-6257	125	19	5330-01-458-3810	269	4
4820-01-456-6257	332	14	5340-01-458-6386	163	8
4320-01-456-6258	122	34	5340-01-458-7147	162	26
5305-01-456-6358	314	40	5340-01-458-7147	487D	1
4720-01-456-6674	466	5	5340-01-458-7156	162	12
4720-01-456-6729	466	9	5340-01-458-7156	487D	1
2590-01-456-7879	471	KIT	5340-01-458-8236	160	23
5930-01-456-7880	120	13	5340-01-458-8236	487B	6
3040-01-456-7881	117	16	7690-01-458-8254	354	12
5315-01-456-7882	117	7	2520-01-459-0050	137	18
2520-01-456-7883	114	8	2530-01-459-0367	KITS	54
5330-01-456-7886	119	5	5342-01-459-4992	487	1
2520-01-456-7888	120	9	2520-01-459-5454	KITS	19
2510-01-456-7889	268	3	2530-01-459-5890	163	10
5330-01-456-8823	143	20	5330-01-459-6477	KITS	61
5330-01-456-8823	151	20	2520-01-459-8532	120	12
5340-01-457-0459	205	16	2530-01-459-9492	KITS	16
4710-01-457-0590	467	10	2530-01-459-9493	KITS	38
4730-01-457-0727	160	7	2530-01-459-9494	KITS	39
4730-01-457-0727	161	7	2530-01-459-9495	KITS	40
4730-01-457-0727	162	8	2530-01-459-9497	139	10
4730-01-457-0727	487A	14	2530-01-459-9497	146	10
4730-01-457-0727	487C	3	5305-01-459-9564	190	6
5340-01-457-0804	465	4	5305-01-459-9564	463	17
2510-01-457-0949	183	22	2530-01-460-2439	174	5
2530-01-457-1337	KITS	64	2530-01-460-2439	175	1
5340-01-457-1778	273	18	5355-01-460-4586	98	3
5935-01-457-2965	282	8	2520-01-460-4961	114	11
5310-01-457-3171	35	30	5340-01-460-5002	270	41
5310-01-457-3171	36	9	5340-01-460-5291	199	24
5310-01-457-3171	38	9	5340-01-460-5306	141	16
5310-01-457-3171	472	20	5935-01-460-5508	458	45
5310-01-457-3171	475	18	4730-01-460-5520	108	12
5365-01-457-3364	277	13	2930-01-460-7507	30	18
5340-01-457-5571	277	11	5340-01-460-8207	105	20
5340-01-457-5734	44	8	4820-01-460-8288	122	24
5365-01-457-8947	273	24	2520-01-460-8301	KITS	27
3110-01-457-9711	277	9	3010-01-460-8309	115	14
2590-01-457-9922	277	32	2590-01-460-8316	108	14
2590-01-457-9922	473	3	2590-01-460-8320	233	7
3020-01-458-0176	33	5	2590-01-460-8320	277	32
3020-01-458-0176	33A	5	2520-01-460-8323	102	1
3020-01-458-0185	33	3	5325-01-460-8350	465	5
5305-01-458-1670	274	10	5340-01-460-8361	122	21
5305-01-458-1670	274	23	5340-01-460-8362	119	23
5305-01-458-1670	276	18	5340-01-460-8363	119	29

CROSS REFERENCE INDEXES

NATIONAL STOCK NUMBER INDEX

STOCK NUMBER	FIGURE NO	ITEM NO	STOCK NUMBER	FIGURE NO	ITEM NO
5340-01-460-8364	119	27	3020-01-462-1202	33	4
5330-01-460-8987	115	4	3040-01-462-1286	KITS	25
5330-01-460-8988	105	7	5310-01-462-2175	232	3
5360-01-460-9068	122	12	5310-01-462-4459	10	15
5360-01-460-9069	119	3	5331-01-462-7294	122	32
5360-01-460-9070	122	23	2530-01-462-8068	158	12
5360-01-460-9072	122	28	2530-01-462-8079	157	22
5360-01-460-9073	122	18	2530-01-462-8079	158	12
5315-01-460-9907	108	11	2540-01-463-0200	98	2
5325-01-460-9908	105	8	2540-01-463-3097	332	39
3040-01-460-9964	108	13	5315-01-464-0812	130	24
4810-01-460-9975	122	16	2520-01-464-1772	103	1
4820-01-460-9988	122	27	5306-01-465-1564	137	3
4820-01-460-9991	122	13	5306-01-465-2140	105	19
4820-01-461-0011	122	20	3040-01-465-3178	156	11
2520-01-461-0073	114	9	5310-01-465-4525	33	7
2520-01-461-0074	114	7	5310-01-465-4525	512	4
2520-01-461-0076	110	2	5307-01-465-5796	30	11
2520-01-461-0078	115	17	5307-01-465-5796	472	17
2520-01-461-0083	115	13	2510-01-465-7620	379	19
2520-01-461-0085	115	7	2590-01-465-7756	463	5
2520-01-461-0092	114	1	2520-01-465-8809	122	9
2520-01-461-0099	110	9	2540-01-465-9030	463	13
2520-01-461-0099	112	8	5310-01-465-9727	463	19
2520-01-461-0107	107	14	4010-01-466-0849	462	7
2920-01-461-1065	98	5	5365-01-466-0850	463	15
2540-01-461-1129	227	19	2920-01-466-1855	476	7
2540-01-461-1134	369	14	5340-01-466-1982	463	10
4820-01-461-1703	466	6	5340-01-466-1985	485	19
2520-01-461-2374	105	22	5340-01-466-2425	463	18
5306-01-461-3555	105	13	5340-01-466-2438	485	18
5306-01-461-3557	105	12	5340-01-466-2451	485	11
5305-01-461-4396	332	38	5340-01-466-2468	480	6
5360-01-461-4931	108	9	5340-01-466-2606	485	20
2520-01-461-5133	122	25	5340-01-466-2611	485	22
2520-01-461-5648	122	29	5340-01-466-2620	480	11
5315-01-461-5649	122	14	3020-01-466-3603	476	10
3120-01-461-6677	122	31	2510-01-466-3752	182	11
3120-01-461-6679	122	31	2540-01-466-3770	463	16
3120-01-461-6680	122	19	2590-01-466-3824	464	4
2520-01-461-7072	KITS	67	2540-01-466-3849	463	4
2520-01-461-7074	KITS	67A	2590-01-466-3866	464	7
2815-01-461-7078	1	1	5340-01-466-4086	463	20
5325-01-461-7157	115	28	2590-01-466-4397	468	2
5340-01-461-7851	147	6	7690-01-466-5217	468	3
5310-01-461-8043	227	48	5340-01-466-5243	374	4
5315-01-461-8374	122	10	2590-01-466-5250	468	6

CROSS REFERENCE INDEXES

NATIONAL STOCK NUMBER INDEX

STOCK NUMBER	FIGURE NO	ITEM NO	STOCK NUMBER	FIGURE NO	ITEM NO
3030-01-466-5387	476	26	5330-01-470-6543	120	4
4710-01-466-5447	479	2	6150-01-470-7014	480	12
2540-01-466-6114	462	1	5340-01-470-7135	198	4
5342-01-466-6276	476	5	5340-01-470-7160	198	6
5342-01-466-6280	476	14	2590-01-471-0236	12	16
5342-01-466-6283	476	24	2930-01-471-0622	28	5
6680-01-466-7238	103	8	5999-01-471-0710	482	7
6680-01-466-7238	400	4	5340-01-471-1040	485	12
2590-01-466-7250	273	6	4720-01-471-5063	487D	KIT
6150-01-466-7528	472	18	5305-01-471-7623	485	21
3030-01-466-9476	32	3	3120-01-471-7844	122	31
5340-01-467-1669	249	47	9540-01-472-5874	88	48
5340-01-467-2127	282	11	2815-01-472-6312	1	1
5305-01-467-2711	486	1	5310-01-472-7368	270	10
5340-01-467-4153	486	7	5340-01-472-8534	98	11
6150-01-467-6716	41	6	6150-01-473-1169	469	1
6150-01-467-6716	472	5	6150-01-473-1174	470	5
6150-01-467-6716	474	10	6150-01-473-1178	469	3
2540-01-467-8313	464	KIT	5315-01-473-1590	462	6
2540-01-467-8341	464	KIT	2920-01-473-1763	36	11
2910-01-467-9029	10	2	5306-01-473-1895	33	10
5330-01-468-3604	115	1	3020-01-473-2048	36	8
5340-01-469-2979	16	15	2510-01-473-2309	202	1
5975-01-469-5558	76	21	4710-01-473-2352	333	7
5975-01-469-5558	472	9	6150-01-473-2435	81	14
5975-01-469-5558	475	5	4730-01-473-3279	4	11
5975-01-469-5558	476	6	5310-01-473-3373	143	8
5340-01-469-5774	487	7	5310-01-473-3373	151	8
5365-01-469-6343	332	37	4820-01-473-3580	178	3
2920-01-469-6903	66	2	5315-01-473-3682	227	43
6150-01-469-7930	480	31	5340-01-473-4031	178	2
6150-01-469-7941	480	34	7690-01-473-4550	356	3
5360-01-469-8077	120	22	5330-01-473-4701	104	21
7690-01-469-9591	466	4	5340-01-473-4800	241	15
7690-01-469-9596	467	6	2520-01-473-5029	126	1
2520-01-469-9893	126	1	2540-01-473-6304	227	37
5306-01-469-9903	120	3	2540-01-473-7107	227	41
5320-01-470-1545	197	16	2520-01-473-7410	KITS	67B
5330-01-470-1922	116	14	2540-01-473-7521	227	42
6150-01-470-2009	78	1	2540-01-473-7544	227	45
6150-01-470-2011	78	1	2540-01-473-7553	227	52
6150-01-470-2016	78	1	2540-01-473-7959	227	54
5340-01-470-2069	332	28	2540-01-473-8050	227	55
4720-01-470-3076	178	26	2510-01-473-8204	227	47
6160-01-470-4172	198	3	2540-01-473-8310	227	40
5962-01-470-4619	50	4	5330-01-473-8584	120	8
5340-01-470-5892	198	16	5340-01-473-8626	66A	10

CROSS REFERENCE INDEXES

NATIONAL STOCK NUMBER INDEX

STOCK NUMBER	FIGURE NO	ITEM NO	STOCK NUMBER	FIGURE NO	ITEM NO
6150-01-473-8640	56	14	6150-01-475-8835	469	6
6150-01-473-8663	483	4	2520-01-475-9665	120	9
2540-01-473-9040	470	9	5325-01-475-9697	269	14
2540-01-473-9045	470	9	5340-01-476-0352	110	14
6680-01-474-0384	482	3	4730-01-476-0850	13	13
5340-01-474-0954	484	9	4730-01-476-0850	14	19
5365-01-474-1057	470	16	2510-01-476-2171	268	3
5365-01-474-1057	471	7	2540-01-476-2172	324	1
5340-01-474-2315	41	3	5360-01-476-2692	120	7
5935-01-474-3033	84	14	3020-01-476-2701	143	38
5999-01-474-3213	484	KIT	3020-01-476-2701	151	38
2540-01-474-3217	333	11	2920-01-476-2716	98	10
5340-01-474-3279	484	8	5340-01-476-2840	188	33
2590-01-474-3326	471	2	7690-01-476-2842	354	16
5340-01-474-4002	120	21	5340-01-476-2845	188	33
5340-01-474-4006	122	9	7690-01-476-2855	354	12
5340-01-474-4011	105	4	5340-01-476-2963	188	26
5340-01-474-4011	125	22	5340-01-476-2972	188	36
5940-01-474-5066	92	8	5306-01-476-3500	120	16
7690-01-474-5928	469	5	5306-01-476-3501	120	14
7690-01-474-5935	470	6	5330-01-476-3866	31	4
5306-01-474-6117	120	18	5340-01-476-4374	332	4
2520-01-474-7051	KITS	29	5340-01-476-4374	372	1
2540-01-474-8562	332	36	4720-01-476-4656	393	17
5340-01-474-8830	463	22	5340-01-476-5072	188	30
2520-01-474-8868	114	12	5340-01-476-5585	11	9
2520-01-474-8871	110	8	5340-01-476-5616	228	12
4820-01-474-8911	KITS	18	7690-01-476-6089	354	4
5306-01-474-8959	119	10	7690-01-476-6101	354	7
4720-01-474-9148	332	7	5340-01-476-6182	250	12
6150-01-474-9676	482	4	5340-01-476-6205	250	11
7690-01-475-1197	482	1	5340-01-476-6243	188	21
5330-01-475-1671	482	5	5360-01-476-6291	117	6
5305-01-475-3014	476	15	7690-01-476-6507	354	8
2540-01-475-3102	231	14	7690-01-476-6510	354	10
2540-01-475-3129	482	15	3020-01-476-6520	175	4
5305-01-475-3154	276	13	5340-01-476-6587	250	8
5305-01-475-3154	33B	1	2540-01-476-6609	188	25
2920-01-475-3180	40	19	5340-01-476-6612	282	11
5305-01-475-3364	276	17	5340-01-476-7263	433	KIT
5975-01-475-3442	227	46	5962-01-476-7772	50	4
5340-01-475-3650	469	8	2540-01-476-7827	397	13
4710-01-475-3753	469	7	5330-01-476-9295	489	4
4720-01-475-3757	470	1	5310-01-476-9321	196	6
4720-01-475-4641	470	2	2540-01-476-9353	454	1
2540-01-475-4708	227	51	5330-01-476-9732	180	22
3940-01-475-4983	469	9	2540-01-477-0162	454	2

CROSS REFERENCE INDEXES

NATIONAL STOCK NUMBER INDEX

STOCK NUMBER	FIGURE NO	ITEM NO	STOCK NUMBER	FIGURE NO	ITEM NO
2540-01-477-0184	454	2	5950-01-480-5377	119	11
2540-01-477-0242	397	14	5950-01-480-5380	119	13
5310-01-477-0828	156	3	5305-01-480-5408	33	16
5305-01-477-1867	180	25	2520-01-480-5436	115	9
5305-01-477-2824	225	38	5365-01-480-6812	105	20
5365-01-477-2843	227	33	3040-01-480-7297	107	7
5331-01-477-3657	15	17	3020-01-480-7299	107	8
5331-01-477-3657	16	16	3020-01-480-7302	107	8
4710-01-477-3662	105	6	3040-01-480-7309	107	13
2510-01-477-3968	179	15	3020-01-480-7311	107	17
2510-01-477-3968	180	24	3020-01-480-7321	107	17
5325-01-477-5348	95	6	5325-01-480-7328	115	10
5325-01-477-6608	122	22	5325-01-480-7331	117	17
5331-01-477-6762	122	32	3040-01-480-7536	107	14
5340-01-477-7052	122	11	2520-01-480-7556	110	15
4710-01-477-9032	120	15	2520-01-480-7563	107	9
5340-01-477-9397	463	5	2520-01-480-7565	114	9
3040-01-477-9645	456	11	2520-01-480-7568	120	9
1095-01-478-3115	275	6	3040-01-480-7591	107	22
5305-01-478-3387	469	12	3040-01-480-7593	107	16
5330-01-478-3900	114	14	3040-01-480-7595	110	15
3110-01-478-4266	KITS	31	3010-01-480-7597	KITS	33
2835-01-478-4268	115	2	3020-01-480-7630	107	17
5330-01-478-4797	117	18	3020-01-480-8698	33	17
5310-01-478-5620	175A	10	3020-01-480-8698	33A	3
5330-01-478-5993	120	10	5340-01-481-0558	33	21
5330-01-478-5994	114	13	2520-01-481-3230	KITS	35A
5360-01-478-6550	117	6	5310-01-481-4029	291	5
2520-01-478-6604	112	7	5310-01-481-4029	297	8
2520-01-478-6607	112	11	7690-01-481-4552	448	12
2590-01-478-6799	181	17	7690-01-481-4906	355	4
2520-01-478-7282	137	19	7690-01-481-4908	354	12
5945-01-478-7862	119	24	5355-01-481-5517	231	17
5340-01-478-9995	120	19	2520-01-481-6120	50	1
5340-01-479-0211	227	38	4730-01-481-6278	177	4
2520-01-479-0847	114	8	5305-01-481-7254	169	31
3020-01-479-2069	112	13	2520-01-481-7690	120	9
5340-01-479-2514	117	19	2520-01-481-8344	KITS	98
5340-01-479-2517	117	17	2520-01-481-8460	KITS	32
5331-01-480-0748	115	26	2520-01-481-8478	115	20
5330-01-480-0750	114	15	2520-01-481-8479	110	11
5330-01-480-0752	KITS	34	2520-01-481-8479	112	17
5330-01-480-2502	105	21	2540-01-481-9178	50	3
5310-01-480-4161	33	8	2540-01-481-9194	50	2
3110-01-480-5240	107	2	3020-01-482-1834	33	18
5962-01-480-5247	50	4	3020-01-482-1834	33A	4
5365-01-480-5282	33	19	2520-01-482-4280	KITS	21

CROSS REFERENCE INDEXES

NATIONAL STOCK NUMBER INDEX

STOCK NUMBER	FIGURE NO	ITEM NO	STOCK NUMBER	FIGURE NO	ITEM NO
6680-01-482-4995	176A	14	5305-01-491-2143	175A	9
2920-01-483-2291	40	46	5310-01-491-2148	33B	11
2920-01-483-2291	43B	34	6110-01-491-2158	49	4
5975-01-484-1150	79	26	5340-01-491-2205	33A	13
7690-01-484-4111	357	6	5340-01-491-2205	33B	5
5340-01-484-6930	240	25	3020-01-491-2659	33B	6
5340-01-484-7646	182	5	3020-01-491-2671	33B	9
5340-01-484-7760	24	3	2530-01-491-2681	175A	3
2530-01-484-9573	158	2	2510-01-491-6919	462	KIT
2530-01-484-9574	158	2	5340-01-491-7497	120	17
4730-01-485-0065	135	5	4730-01-491-8047	178	4
2520-01-485-1813	138	12	5306-01-491-9414	117	20
2520-01-485-1813	145	12	5306-01-492-7301	188	39
2590-01-485-5455	471	12	4710-01-493-1712	11	30
5340-01-485-6862	470	14	5340-01-493-2538	11	31
4320-01-485-7480	122	3	5340-01-493-2555	11	32
2520-01-485-9405	112	2	5340-01-493-2569	4	18
9905-01-486-0051	355	4	3040-01-493-4036	112	7
5340-01-486-1005	458	44	4730-01-493-4056	176A	24
2540-01-487-3616	329	3	2530-01-493-5859	167	13
2540-01-487-3626	329	3	5340-01-493-9134	120	17
5330-01-487-7129	148	16	5331-01-494-2431	119	32
7690-01-488-5520	471	8	5340-01-494-6794	462	5
5365-01-488-5594	33B	8	5306-01-495-1744	492	19
3030-01-488-5606	32	3	4710-01-495-4268	492	1
3020-01-488-5635	175A	12	4710-01-495-4302	492	2
3020-01-488-5638	34	22	5331-01-495-4801	493	7
5365-01-488-5640	33A	11	5331-01-495-4810	492	21
5365-01-488-5640	33B	7	5331-01-495-4810	493	1
5340-01-488-5643	38A	6	5331-01-495-4810	490A	1
5340-01-488-6073	38A	1	5331-01-495-4814	492	23
4710-01-488-6076	333	7	5331-01-495-4814	493	3
4710-01-488-6143	176A	1	5331-01-495-4814	490A	2
2530-01-488-6147	176A	5	5331-01-495-4820	492	22
4720-01-488-6156	175A	14	5365-01-495-5340	462	10
4730-01-488-6163	333	41	4720-01-495-6202	492	24
5340-01-488-6179	38A	7	5340-01-495-7546	462	12
5340-01-488-6181	33A	8	4820-01-495-7582	492	12
5340-01-488-6185	176A	4	4820-01-495-7582	490A	3
2540-01-488-6429	371	1	4820-01-495-7601	492	10
2520-01-488-7016	120	12	2510-01-495-8335	347	9
5340-01-488-8389	240	25	5310-01-496-0115	327	49
2520-01-489-0849	KITS	67C	2590-01-496-1569	240	5
5310-01-490-7461	33B	10	2510-01-496-1886	347	5
3020-01-491-0776	33A	12	2510-01-496-1927	347	11
2920-01-491-2011	33A	18	4940-01-496-2178	347	10
5310-01-491-2014	175A	8	4730-01-496-3012	492	20

CROSS REFERENCE INDEXES

NATIONAL STOCK NUMBER INDEX

STOCK NUMBER	FIGURE NO	ITEM NO	STOCK NUMBER	FIGURE NO	ITEM NO
4730-01-496-3012	490A	4	5306-01-502-3440	136	13
4720-01-496-3717	492	5	2520-01-502-6586	118	14
2990-01-496-3766	398	KIT	5310-01-504-5729	490A	9
5330-01-496-5547	223	4	5306-01-504-6221	490A	8
5330-01-496-5548	223	4	5306-01-504-6223	490A	7
4330-01-496-5720	KITS	35	3030-01-504-6408	490A	11
6110-01-496-9260	52	1	5340-01-505-4197	490A	10
5962-01-497-1611	50	4	4720-01-505-4702	176A	23
5340-01-497-2269	33A	6	3010-01-505-7205	490A	12
5306-01-497-4738	9	7	5330-01-505-7214	176A	10
5340-01-498-7964	191	4	5331-01-505-7218	176A	7
2510-01-498-8000	397	21	5340-01-505-9463	176A	8
5340-01-498-9619	368	45	5340-01-506-1892	176A	9
5340-01-498-9625	368	45	4330-01-506-2918	176A	12
5340-01-499-0014	36	3	4730-01-506-3179	176A	6
2610-01-500-4806	167	13	5340-01-506-7986	191	24
5305-01-500-8280	88	25			

CROSS REFERENCE INDEXES

PART NUMBER INDEX

CAGE	PART NUMBER	STOCK NUMBER	FIGURE NO	ITEM NO
41947	A-327	4730-00-949-8694	335	5
		4730-00-949-8694	336	3
58536	A-A-52406-4SA	5340-01-333-0162	346	3
17576	A-A-52506	4730-00-908-6294	368	20
58536	A-A-59432-08	4730-01-135-8310	148	30
27767	A01-09314	5305-01-185-8673	156	15
24975	A010095461	5977-01-270-1466	39	66
22075	A02-08052	5310-01-186-5420	156	13
35510	A022096282	2920-01-310-9973	39	28
22075	A03-002204	5310-01-477-0828	156	3
24975	A041095972	6115-01-269-7911	39	21
89326	A22506-4	5310-00-809-4058	42	7
		5310-00-809-4058	402	2
		5310-00-809-4058	481	8
78570	A22673	5305-00-984-4988	367	16
10988	A27365	5331-00-451-0118	128	51
		5331-00-451-0118	129	26
80063	A3046166	5985-01-215-9404	410	6
		5985-01-215-9404	414	5
		5985-01-215-9404	428	5
03481	A31-125	5310-00-952-3567	374	12
80063	A3157855	5340-01-467-4153	486	7
58536	A524-72-1	2910-01-445-8097	368	30
58536	A52425-1	5940-00-549-6581	69	15
58536	A52432-1	2540-00-840-0022	328	12
58536	A52463-2-10	6240-00-044-6914	60	7
		6240-00-044-6914	61	7
		6240-00-044-6914	62	3
		6240-00-044-6914	64	11
05657	A6	4730-00-816-2787	327	23
53964	A609014	5310-00-809-4058	19	4
53964	A609015	5306-01-190-4553	19	3
53964	A618017	5331-01-335-7592	19	8
53964	A630003	2910-01-218-4489	KITS	3
35510	A777100841	5977-01-407-2847	39	63
53964	A910044	4330-01-190-3579	KITS	5
33116	A98-09439	2530-01-206-3874	KITS	4
58536	AA55569/01-009	5920-01-085-0825	52	13
		5920-01-085-0825	59	14
58536	AA55571/01-001	5925-01-430-2318	48	3
		5925-01-430-2318	469	13
58536	AA55571/02-001	5925-00-894-8015	50	10
11815	AAC-32	5320-01-362-6195	247	7
11815	AAP-610	5320-01-223-7728	298	7
54402	AD42BS	5320-00-899-0981	213	29
		5320-00-899-0981	214	19
		5320-00-899-0981	270	16
		5320-00-899-0981	315	3
		5320-00-899-0981	337	12

CROSS REFERENCE INDEXES

PART NUMBER INDEX

CAGE	PART NUMBER	STOCK NUMBER	FIGURE NO	ITEM NO
54402	AD44BS	5320-01-023-2529	325	30
90030	AD45BS	5320-00-275-8344	337	7
07707	AD48BS	5320-00-850-3282	368	44
21868	AD778-08B79	4720-00-111-5096	BULK	8
11078	ADS43	5320-00-083-5009	52	9
		5320-00-083-5009	197	1
		5320-00-083-5009	208	6
		5320-00-083-5009	211	4
		5320-00-083-5009	296	12
		5320-00-083-5009	311	5
00624	AE208-10	9330-00-011-2000	BULK	65
12387	AEA9630A	4730-00-908-3194	176A	22
72794	AJ7-40-CBC	5325-01-264-1522	207	3
78276	ALS4-1024-130	5325-01-411-0066	210	13
		5325-01-411-0066	225	48
		5325-01-411-0066	226	28
		5325-01-411-0066	269	7
		5325-01-411-0066	460	4
78276	ALS4-1024-225	5325-01-475-9697	269	14
19728	AMA-74		43	3
19728	AMA-75		43	2
19728	AMA-90		43	11
68505	AMA-95	2920-01-212-5816	43	50
68505	AMA1096	5910-01-218-1675	43	46
0EDY1	AMA2004AS	2920-01-180-8666	43	23
88044	AN365-1024A	5310-00-208-1918	202	41
		5310-00-208-1918	205	38
		5310-00-208-1918	206	16
		5310-00-208-1918	243	28
		5310-00-208-1918	244	17
		5310-00-208-1918	248	5
		5310-00-208-1918	249	18
		5310-00-208-1918	249	42
		5310-00-208-1918	279	28
88044	AN5H10A	5306-00-182-2027	198	25
		5306-00-182-2027	199	44
		5306-00-182-2027	317	12
		5306-00-182-2027	376	19
88044	AN5H41	5306-00-292-8253	277	37
88044	AN5H6A	5306-00-182-2025	199	45
88044	AN5H7	5306-00-180-2748	321	32
88044	AN6-16A	5306-00-208-3639	279	12
88044	AN8008D6	5342-00-200-7564	307	4
		5342-00-200-7564	308	16
88044	AN8013-2	5310-00-167-0893	16	25
		5310-00-167-0893	307	3
		5310-00-167-0893	308	14
		5310-00-167-0893	401	15
55719	AN8506-4	5120-00-184-8398	505	1

CROSS REFERENCE INDEXES

PART NUMBER INDEX

CAGE	PART NUMBER	STOCK NUMBER	FIGURE NO	ITEM NO
88044	AN960-416L	5310-00-167-0835	279	3
88044	AN960-516L	5310-00-167-0836	279	17
88044	AN960-616L	5310-00-167-0837	279	11
88044	AN960-816	5310-00-167-0823	199	21
		5310-00-167-0823	245	25
		5310-00-167-0823	251	46
		5310-00-167-0823	252	14
		5310-00-167-0823	429	35
		5310-00-167-0823	446	27
87585	ANA9-5	5325-00-276-6228	489	6
78276	ATS2-813	5325-01-409-0211	127	8
78225	AX2022-02	2590-01-196-5228	4	1
12204	B0013444	3030-00-504-8682	490	11
73821	B0625-022-S	5310-01-203-3230	273	9
80204	B107.19	5120-01-373-4981	507	5
80204	B18212HRCZ080	5310-01-478-5620	175A	10
80204	B1821BH025C050N	5305-00-071-2506	25	1
		5305-00-071-2506	28	8
		5305-00-071-2506	55	12
		5305-00-071-2506	103	4
		5305-00-071-2506	156	16
		5305-00-071-2506	365	13
		5305-00-071-2506	365	26
		5305-00-071-2506	368	24
		5305-00-071-2506	375	30
		5305-00-071-2506	496	13
80204	B1821BH025C063N	5305-00-068-7837	28	8
		5305-00-068-7837	46	25
		5305-00-068-7837	155	11
		5305-00-068-7837	177	10
		5305-00-068-7837	178	5
		5305-00-068-7837	197	30
		5305-00-068-7837	199	42
		5305-00-068-7837	210	3
		5305-00-068-7837	274	8
		5305-00-068-7837	276	1
		5305-00-068-7837	176A	17
80204	B1821BH025C075N	5305-00-068-0508	15	20
		5305-00-068-0508	17	12
		5305-00-068-0508	29	6
		5305-00-068-0508	88	50
		5305-00-068-0508	208	2
		5305-00-068-0508	233	6
		5305-00-068-0508	241	12
		5305-00-068-0508	243	13
		5305-00-068-0508	252	3
		5305-00-068-0508	269	33
		5305-00-068-0508	270	28
		5305-00-068-0508	275	5

CROSS REFERENCE INDEXES

PART NUMBER INDEX

CAGE	PART NUMBER	STOCK NUMBER	FIGURE NO	ITEM NO
		5305-00-068-0508	283	14
		5305-00-068-0508	287	12
		5305-00-068-0508	327	45
		5305-00-068-0508	331	35
		5305-00-068-0508	332	5
		5305-00-068-0508	365	4
		5305-00-068-0508	368	40
		5305-00-068-0508	398	16
		5305-00-068-0508	399	21
		5305-00-068-0508	400	14
		5305-00-068-0508	43B	41
		5305-00-068-0508	457	14
		5305-00-068-0508	468	5
		5305-00-068-0508	478	4
		5305-00-068-0508	481	6
		5305-00-068-0508	485	10
		5305-00-068-0508	492	9
		5305-00-068-0508	498	8
80204	B1821BH025C088N	5305-00-071-2505	80	13
		5305-00-071-2505	98	15
		5305-00-071-2505	99	6
		5305-00-071-2505	202	16
		5305-00-071-2505	209	6
		5305-00-071-2505	245	37
		5305-00-071-2505	247	15
		5305-00-071-2505	280	54
		5305-00-071-2505	281	54
		5305-00-071-2505	311	4
		5305-00-071-2505	325	13
		5305-00-071-2505	326	13
		5305-00-071-2505	419	1
80204	B1821BH025C100N	5305-00-225-3843	21	17
		5305-00-225-3843	42	6
		5305-00-225-3843	95	42
		5305-00-225-3843	153	5
		5305-00-225-3843	169	10
		5305-00-225-3843	169	30
		5305-00-225-3843	203	1
		5305-00-225-3843	203	26
		5305-00-225-3843	204	1
		5305-00-225-3843	227	28
		5305-00-225-3843	247	1
		5305-00-225-3843	249	2
		5305-00-225-3843	250	5
		5305-00-225-3843	252	12
		5305-00-225-3843	254	13
		5305-00-225-3843	266	21
		5305-00-225-3843	267	5
		5305-00-225-3843	277	23

CROSS REFERENCE INDEXES

PART NUMBER INDEX

CAGE	PART NUMBER	STOCK NUMBER	FIGURE NO	ITEM NO
		5305-00-225-3843	285	14
		5305-00-225-3843	286	36
		5305-00-225-3843	292	11
		5305-00-225-3843	312	1
		5305-00-225-3843	334	6
		5305-00-225-3843	343	18
		5305-00-225-3843	352	3
		5305-00-225-3843	366	17
		5305-00-225-3843	368	34
		5305-00-225-3843	417	3
		5305-00-225-3843	430	42
		5305-00-225-3843	459	3
		5305-00-225-3843	475	6
		5305-00-225-3843	484	14
		5305-00-225-3843	486	12
		5305-00-225-3843	492	15
		5305-00-225-3843	494	11
80204	B1821BH025C113N	5305-00-225-3842	5	16
		5305-00-225-3842	202	10
		5305-00-225-3842	203	5
		5305-00-225-3842	204	5
		5305-00-225-3842	308	9
		5305-00-225-3842	430	16
80204	B1821BH025C125N	5305-00-068-0509	49	6
		5305-00-068-0509	198	7
		5305-00-068-0509	251	28
		5305-00-068-0509	252	11
		5305-00-068-0509	270	8
		5305-00-068-0509	285	3
		5305-00-068-0509	288	24
		5305-00-068-0509	288	32
		5305-00-068-0509	321	11
		5305-00-068-0509	398	10
		5305-00-068-0509	402	3
		5305-00-068-0509	425	3
		5305-00-068-0509	426	10
		5305-00-068-0509	427	4
		5305-00-068-0509	487	9
80204	B1821BH025C150N	5305-00-071-2509	83	29
		5305-00-071-2509	88	46
		5305-00-071-2509	225	41
		5305-00-071-2509	246	35
		5305-00-071-2509	248	27
		5305-00-071-2509	249	20
		5305-00-071-2509	252	10
		5305-00-071-2509	253	13
		5305-00-071-2509	253	20
		5305-00-071-2509	255	19
		5305-00-071-2509	289	9

CROSS REFERENCE INDEXES

PART NUMBER INDEX

CAGE	PART NUMBER	STOCK NUMBER	FIGURE NO	ITEM NO
		5305-00-071-2509	389	11
80204	B1821BH025C175N	5305-00-071-2510	153	11
		5305-00-071-2510	211	11
		5305-00-071-2510	212	7
		5305-00-071-2510	246	29
		5305-00-071-2510	246	38
		5305-00-071-2510	249	9
		5305-00-071-2510	484	10
80204	B1821BH025C200N	5305-00-071-2511	248	20
80204	B1821BH025C225N	5305-00-071-2512	293	26
80204	B1821BH025C250N	5305-00-071-2513	248	25
		5305-00-071-2513	249	36
80204	B1821BH025C275N	5305-00-071-2514	251	10
80204	B1821BH025C450N	5305-01-202-2676	155	16
80204	B1821BH025F050N	5305-00-267-8952	387	7
80204	B1821BH025F063N	5305-00-267-8953	279	2
		5305-00-267-8953	388	12
		5305-00-267-8953	43B	32
		5305-00-267-8953	485	15
80204	B1821BH025F088N	5306-00-068-0514	379	13
80204	B1821BH025F100N	5305-00-068-0515	64	22
		5305-00-068-0515	379	52
		5305-00-068-0515	387	17
		5305-00-068-0515	393	9
80204	B1821BH025F125N	5305-00-267-8954	228	15
80204	B1821BH031C050N	5306-00-226-4822	35	16
80204	B1821BH031C056N	5306-00-226-4823	143	36
		5306-00-226-4823	151	36
80204	B1821BH031C063N	5306-00-226-4824	273	19
		5306-00-226-4824	43B	14
		5306-00-226-4824	488	23
80204	B1821BH031C075N	5306-00-226-4825	19	20
		5306-00-226-4825	100	17
		5306-00-226-4825	116	18
		5306-00-226-4825	230	26
		5306-00-226-4825	234	6
		5306-00-226-4825	480	3
		5306-00-226-4825	487	16
		5306-00-226-4825	487B	3
80204	B1821BH031C088N	5306-00-226-4826	230	19
		5306-00-226-4826	231	12
		5306-00-226-4826	273	7
		5306-00-226-4826	277	7
		5306-00-226-4826	328	8
80204	B1821BH031C100N	5306-00-226-4827	83	30
		5306-00-226-4827	204	6
		5306-00-226-4827	225	29
		5306-00-226-4827	226	14
		5306-00-226-4827	242	10

CROSS REFERENCE INDEXES

PART NUMBER INDEX

CAGE	PART NUMBER	STOCK NUMBER	FIGURE NO	ITEM NO
		5306-00-226-4827	287	20
		5306-00-226-4827	329	18
		5306-00-226-4827	473	1
		5306-00-226-4827	474	7
80204	B1821BH031C113N	5306-00-226-4828	160	13
		5306-00-226-4828	162	14
		5306-00-226-4828	225	2
		5306-00-226-4828	226	13
		5306-00-226-4828	284	1
		5306-00-226-4828	288	26
		5306-00-226-4828	292	13
		5306-00-226-4828	340	1
		5306-00-226-4828	346	1
		5306-00-226-4828	363	23
		5306-00-226-4828	374	22
		5306-00-226-4828	417	4
		5306-00-226-4828	418	7
		5306-00-226-4828	419	8
		5306-00-226-4828	420	5
		5306-00-226-4828	421	7
		5306-00-226-4828	422	9
		5306-00-226-4828	423	3
		5306-00-226-4828	439	1
		5306-00-226-4828	487D	8
80204	B1821BH031C125N	5306-00-226-4829	144	12
		5306-00-226-4829	152	12
		5306-00-226-4829	211	31
		5306-00-226-4829	212	29
		5306-00-226-4829	225	26
		5306-00-226-4829	226	8
		5306-00-226-4829	328	2
		5306-00-226-4829	390	6
		5306-00-226-4829	417	7
		5306-00-226-4829	423	7
		5306-00-226-4829	432	2
		5306-00-226-4829	461	8
80204	B1821BH031C150N	5305-00-226-4831	121	9
		5305-00-226-4831	242	2
		5305-00-226-4831	269	20
		5305-00-226-4831	279	35
		5305-00-226-4831	288	23
80204	B1821BH031C175N	5306-00-226-4832	121	8
80204	B1821BH031C200N	5306-00-226-4833	211	15
		5306-00-226-4833	212	11
		5306-00-226-4833	242	4
		5306-00-226-4833	377	15
80204	B1821BH031C250N	5306-00-226-4835	209	16
		5306-00-226-4835	338	24
		5306-00-226-4835	429	5

CROSS REFERENCE INDEXES

PART NUMBER INDEX

CAGE	PART NUMBER	STOCK NUMBER	FIGURE NO	ITEM NO
80204	B1821BH031C325N	5306-00-226-4838	189	3
80204	B1821BH031F075N	5306-00-050-1238	433	9
80204	B1821BH031F088N	5305-01-407-9487	199	6
80204	B1821BH031F100N	5305-00-051-4076	324	7
		5305-00-051-4076	378	30
80204	B1821BH031F113N	5306-00-051-4077	266	4
		5306-00-051-4077	321	29
		5306-00-051-4077	321	34
		5306-00-051-4077	325	29
		5306-00-051-4077	413	11
		5306-00-051-4077	415	5
80204	B1821BH038C075N	5305-00-543-4372	60	1
		5305-00-543-4372	61	1
		5305-00-543-4372	240	6
		5305-00-543-4372	332	35
		5305-00-543-4372	370	26
80204	B1821BH038C088N	5305-01-140-9118	175	7
		5305-01-140-9118	272	24
80204	B1821BH038C100D	5305-00-942-2196	456	22
80204	B1821BH038C100L	5306-01-114-0963	37	1
		5306-01-114-0963	475	29
		5306-01-114-0963	476	4
80204	B1821BH038C100N	5305-00-068-0510	2	6
		5305-00-068-0510	15	31
		5305-00-068-0510	16	20
		5305-00-068-0510	23	18
		5305-00-068-0510	24	26
		5305-00-068-0510	26	7
		5305-00-068-0510	35	2
		5305-00-068-0510	37	2
		5305-00-068-0510	142	15
		5305-00-068-0510	143	15
		5305-00-068-0510	150	15
		5305-00-068-0510	151	15
		5305-00-068-0510	174	13
		5305-00-068-0510	175	6
		5305-00-068-0510	245	21
		5305-00-068-0510	274	27
		5305-00-068-0510	275	1
		5305-00-068-0510	276	24
		5305-00-068-0510	277	47
		5305-00-068-0510	286	29
		5305-00-068-0510	38A	5
		5305-00-068-0510	445	13
		5305-00-068-0510	463	6
		5305-00-068-0510	464	3
		5305-00-068-0510	471	11
		5305-00-068-0510	476	1
80204	B1821BH038C113N	5305-00-543-2419	1	6

CROSS REFERENCE INDEXES

PART NUMBER INDEX

CAGE	PART NUMBER	STOCK NUMBER	FIGURE NO	ITEM NO
		5305-00-543-2419	2	2
		5305-00-543-2419	23	8
		5305-00-543-2419	251	43
		5305-00-543-2419	329	1
		5305-00-543-2419	341	1
		5305-00-543-2419	425	14
		5305-00-543-2419	463	1
80204	B1821BH038C125N	5305-00-068-0511	24	8
		5305-00-068-0511	138	16
		5305-00-068-0511	139	15
		5305-00-068-0511	145	16
		5305-00-068-0511	146	15
		5305-00-068-0511	189	9
		5305-00-068-0511	190	7
		5305-00-068-0511	266	18
		5305-00-068-0511	272	33
		5305-00-068-0511	283	6
		5305-00-068-0511	431	2
		5305-00-068-0511	462	2
80204	B1821BH038C138N	5305-00-688-2111	103	13
		5305-00-688-2111	144	16
		5305-00-688-2111	152	16
		5305-00-688-2111	438	7
80204	B1821BH038C150N	5305-00-725-2317	36	16
		5305-00-725-2317	205	20
		5305-00-725-2317	245	23
		5305-00-725-2317	270	9
		5305-00-725-2317	270	13
		5305-00-725-2317	270	30
		5305-00-725-2317	272	34
		5305-00-725-2317	273	3
		5305-00-725-2317	274	26
		5305-00-725-2317	275	22
		5305-00-725-2317	277	12
		5305-00-725-2317	286	34
		5305-00-725-2317	33A	20
		5305-00-725-2317	38A	4
		5305-00-725-2317	463	21
		5305-00-725-2317	490	1
80204	B1821BH038C175N	5305-00-821-3869	23	23
		5305-00-821-3869	24	27
		5305-00-821-3869	251	26
		5305-00-821-3869	251	44
		5305-00-821-3869	272	27
		5305-00-821-3869	285	4
		5305-00-821-3869	414	2
		5305-00-821-3869	462	11
		5305-00-821-3869	470	15
		5305-00-821-3869	471	6

CROSS REFERENCE INDEXES

PART NUMBER INDEX

CAGE	PART NUMBER	STOCK NUMBER	FIGURE NO	ITEM NO
		5305-00-821-3869	486	8
80204	B1821BH038C200N	5305-00-782-9489	23	1
		5305-00-782-9489	23	14
		5305-00-782-9489	24	13
		5305-00-782-9489	24	22
		5305-00-782-9489	202	35
		5305-00-782-9489	272	38
		5305-00-782-9489	273	4
		5305-00-782-9489	274	13
		5305-00-782-9489	398	22
		5305-00-782-9489	410	4
		5305-00-782-9489	412	4
		5305-00-782-9489	428	3
		5305-00-782-9489	490	3
80204	B1821BH038C225N	5305-00-638-8920	341	9
		5305-00-638-8920	426	14
		5305-00-638-8920	427	13
80204	B1821BH038C250N	5305-00-543-2866	272	34
		5305-00-543-2866	273	5
		5305-00-543-2866	274	26
		5305-00-543-2866	275	21
		5305-00-543-2866	276	23
		5305-00-543-2866	33A	17
		5305-00-543-2866	33B	12
80204	B1821BH038C275N	5305-00-781-3926	1	5
		5305-00-781-3926	272	23
		5305-00-781-3926	272	35
		5305-00-781-3926	272	38
		5305-00-781-3926	273	1
		5305-00-781-3926	273	4
		5305-00-781-3926	274	25
		5305-00-781-3926	275	3
		5305-00-781-3926	277	12
		5305-00-781-3926	286	32
80204	B1821BH038C300N	5305-00-846-5703	268	17
		5305-00-846-5703	272	27
		5305-00-846-5703	274	12
		5305-00-846-5703	277	48
80204	B1821BH038C350N	5305-00-781-3927	277	31
		5305-00-781-3927	288	10
		5305-00-781-3927	33A	19
80204	B1821BH038C375N	5305-00-990-8632	273	1
		5305-00-990-8632	274	25
		5305-00-990-8632	276	22
		5305-00-990-8632	277	31
80204	B1821BH038C400N	5305-00-781-3928	274	12
		5305-00-781-3928	274	23
		5305-00-781-3928	277	31
		5305-00-781-3928	288	6

CROSS REFERENCE INDEXES

PART NUMBER INDEX

CAGE	PART NUMBER	STOCK NUMBER	FIGURE NO	ITEM NO
80204	B1821BH038C450N	5305-00-857-6886	274	10
		5305-00-857-6886	276	12
		5305-00-857-6886	277	1
80204	B1821BH038C475N	5305-00-781-3930	170	21
		5305-00-781-3930	275	14
80204	B1821BH038C550N	5305-01-458-1670	274	10
		5305-01-458-1670	274	23
		5305-01-458-1670	276	18
80204	B1821BH038C575N	5305-01-446-0767	38	16
		5305-01-446-0767	275	18
80204	B1821BH038C600N	5305-01-386-9052	431	8
80204	B1821BH038C700N	5305-01-475-3154	276	13
		5305-01-475-3154	33B	1
80204	B1821BH038C750N	5305-01-475-3364	276	17
80204	B1821BH038F063N	5305-00-269-3233	363	10
80204	B1821BH038F175N	5305-00-269-3241	392	7
80204	B1821BH038F200N	5305-00-269-3242	390	15
80204	B1821BH044C100N	5305-00-071-1786	136	5
		5305-00-071-1786	151	42
80204	B1821BH044C125N	5305-00-071-1788	425	5
		5305-00-071-1788	426	8
		5305-00-071-1788	427	6
80204	B1821BH044C150N	5305-00-071-2055	35	31
		5305-00-071-2055	152	16
80204	B1821BH044C175N	5305-00-071-2056	389	3
		5305-00-071-2056	393	3
		5305-00-071-2056	395	14
80204	B1821BH044C200N	5305-00-071-2057	37	21
		5305-00-071-2057	42	5
		5305-00-071-2057	462	13
80204	B1821BH044C250N	5305-00-071-2059	37	9
		5305-00-071-2059	42	5
80204	B1821BH044F975N	5305-01-429-9149	35	21
		5305-01-429-9149	36	1
		5305-01-429-9149	38	1
		5305-01-429-9149	472	10
		5305-01-429-9149	475	10
80204	B1821BH050C100N	5305-00-071-2066	140	5
		5305-00-071-2066	140	11
		5305-00-071-2066	147	9
		5305-00-071-2066	182	13
		5305-00-071-2066	182	21
		5305-00-071-2066	183	19
		5305-00-071-2066	296	4
80204	B1821BH050C113N	5305-00-732-0511	103	18
		5305-00-732-0511	363	21
80204	B1821BH050C125D	5305-00-915-8087	2	14
		5305-00-915-8087	156	22
80204	B1821BH050C125N	5305-00-071-2067	140	11

CROSS REFERENCE INDEXES

PART NUMBER INDEX

CAGE	PART NUMBER	STOCK NUMBER	FIGURE NO	ITEM NO
		5305-00-071-2067	142	16
		5305-00-071-2067	143	16
		5305-00-071-2067	147	5
		5305-00-071-2067	150	16
		5305-00-071-2067	151	16
		5305-00-071-2067	179	17
		5305-00-071-2067	180	27
		5305-00-071-2067	182	20
		5305-00-071-2067	183	19
		5305-00-071-2067	184	7
		5305-00-071-2067	237	9
		5305-00-071-2067	429	34
		5305-00-071-2067	456	6
		5305-00-071-2067	487A	4
80204	B1821BH050C150N	5305-00-071-2069	142	34
		5305-00-071-2069	143	40
		5305-00-071-2069	174	8
		5305-00-071-2069	182	13
		5305-00-071-2069	183	9
		5305-00-071-2069	183	24
		5305-00-071-2069	187	14
		5305-00-071-2069	209	15
		5305-00-071-2069	315	8
		5305-00-071-2069	363	27
		5305-00-071-2069	456	23
80204	B1821BH050C175N	5305-00-071-2070	127	4
		5305-00-071-2070	181	8
		5305-00-071-2070	186	13
		5305-00-071-2070	242	6
		5305-00-071-2070	245	24
		5305-00-071-2070	429	38
		5305-00-071-2070	438	6
		5305-00-071-2070	441	14
		5305-00-071-2070	446	26
		5305-00-071-2070	456	24
80204	B1821BH050C200N	5305-00-071-2071	26	12
		5305-00-071-2071	185	10
		5305-00-071-2071	252	13
		5305-00-071-2071	285	6
		5305-00-071-2071	295	8
		5305-00-071-2071	455	2
		5305-00-071-2071	456	5
80204	B1821BH050C225N	5305-00-071-2072	283	4
80204	B1821BH050C250N	5305-00-071-2073	188	24
		5305-00-071-2073	191	7
80204	B1821BH050C275N	5305-00-071-2074	33	1
		5305-00-071-2074	182	18
		5305-00-071-2074	183	18
80204	B1821BH050C300N	5305-00-071-2075	182	14

CROSS REFERENCE INDEXES

PART NUMBER INDEX

CAGE	PART NUMBER	STOCK NUMBER	FIGURE NO	ITEM NO
		5305-00-071-2075	183	23
		5305-00-071-2075	188	6
		5305-00-071-2075	191	7
		5305-00-071-2075	33A	1
80204	B1821BH050C325N	5305-00-071-2076	147	9
		5305-00-071-2076	182	8
		5305-00-071-2076	182	16
		5305-00-071-2076	188	9
80204	B1821BH050C350N	5305-00-071-2077	191	5
80204	B1821BH050C375N	5305-00-071-2078	181	7
		5305-00-071-2078	184	4
		5305-00-071-2078	188	1
80204	B1821BH050C400N	5305-00-071-2079	181	3
		5305-00-071-2079	182	8
		5305-00-071-2079	188	24
		5305-00-071-2079	191	7
80204	B1821BH050C425N	5305-00-071-1783	188	22
80204	B1821BH050C450N	5305-00-071-2081	2	11
		5305-00-071-2081	179	13
		5305-00-071-2081	180	18
		5305-00-071-2081	184	17
80204	B1821BH050C475N	5305-00-071-2082	179	6
		5305-00-071-2082	180	7
80204	B1821BH050C500N	5305-00-071-2083	363	16
80204	B1821BH050C775N	5305-01-480-5408	33	16
80204	B1821BH050F150N	5305-00-719-5221	390	2
80204	B1821BH050F200N	5305-00-719-5238	397	16
80204	B1821BH050F275N	5305-00-719-5241	397	20
80204	B1821BH056C150N	5305-00-716-7680	180	14
80204	B1821BH056F950N	5305-01-475-3014	476	15
80204	B1821BH063C125N	5305-00-724-7219	140	8
		5305-00-724-7219	147	8
80204	B1821BH063C150N	5305-00-724-7220	140	10
		5305-00-724-7220	147	11
		5305-00-724-7220	157	21
		5305-00-724-7220	158	14
80204	B1821BH063C300N	5305-00-724-7228	194	8
80204	B1821BH063C350N	5305-00-724-7247	185	3
80204	B1821BH063C375N	5305-00-724-7248	186	4
		5305-00-724-7248	457	18
80204	B1821BH063C400N	5305-00-724-7254	186	3
		5305-00-724-7254	196	12
		5305-00-724-7254	470	8
80204	B1821BH063C425N	5305-00-724-7263	196	1
		5305-00-724-7263	196	16
80204	B1821BH063C450N	5305-00-724-7264	196	12
		5305-00-724-7264	196	16
80204	B1821BH063C475N	5305-00-724-7265	196	1
80204	B1821BH075C325N	5305-00-947-4355	183	17

CROSS REFERENCE INDEXES

PART NUMBER INDEX

CAGE	PART NUMBER	STOCK NUMBER	FIGURE NO	ITEM NO
80204	B1821BH075C400N	5305-00-947-4358	181	10
		5305-00-947-4358	182	6
		5305-00-947-4358	188	39
80204	B1821BH075C425N	5305-00-947-4359	183	8
80204	B1821BH075C450N	5305-00-947-4360	183	16
		5305-00-947-4360	184	13
80204	B1821BH075C475N	5305-00-947-4361	144	1
		5305-00-947-4361	152	1
		5305-00-947-4361	195	2
80204	B1821BH075C500N	5305-00-947-4362	144	22
80204	B1821BH075C550N	5305-00-947-4363	471	4
80204	B18231B10020NF	5305-01-390-0547	484	4
80204	B18231B10025NF	5305-01-380-3395	1	5
		5305-01-380-3395	2	6
80204	B18235B10110N	5306-01-504-6221	490A	8
80204	B18235B10130N	5306-01-504-6223	490A	7
80204	B18241B100	5310-01-366-3539	33A	10
80204	B18241B100F	5310-01-395-8747	30	9
		5310-01-395-8747	35	25
		5310-01-395-8747	36	20
		5310-01-395-8747	37	15
		5310-01-395-8747	38	20
		5310-01-395-8747	41	11
		5310-01-395-8747	42	11
		5310-01-395-8747	77	8
		5310-01-395-8747	472	1
		5310-01-395-8747	474	5
		5310-01-395-8747	475	13
		5310-01-395-8747	476	21
		5310-01-395-8747	490	8
83298	B20521-4	5315-00-616-5514	175A	7
28527	B2099690G1	5331-00-185-0075	496	14
81349	B47287-II-1/2	9330-01-252-1239	487A	1
		9330-01-252-1239	BULK	66
81349	B47287-II-1/2-27		162	15
81349	B47287-II-1/2-3		13	12
			14	18
81361	B5-19-1676-1	4730-00-808-5090	311	13
		4730-00-808-5090	312	9
81361	B5-19-1829	4240-00-007-9453	311	10
		4240-00-007-9453	312	6
88907	B54-32780	4730-00-278-2523	385	4
		4730-00-278-2523	388	5
72962	B79NM-50	5310-01-299-6460	327	4
81205	BACG20AF8H1	5325-00-276-6051	96	21
81205	BACT14A6	4030-00-641-3921	275	11
11815	BALM-6BP-14	5320-01-254-2283	208	37
		5320-01-254-2283	332	40
11815	BAPKTR-64	5320-01-275-1998	64	2

CROSS REFERENCE INDEXES

PART NUMBER INDEX

CAGE	PART NUMBER	STOCK NUMBER	FIGURE NO	ITEM NO
		5320-01-275-1998	197	14
		5320-01-275-1998	199	53
		5320-01-275-1998	212	21
		5320-01-275-1998	332	12
		5320-01-275-1998	379	27
98410	BB-823-06	5940-00-283-5280	367	11
98410	BB-837-08	5940-00-143-4774	367	15
72794	BJR7-100CBC	5325-01-191-7555	208	22
72794	BJR7-90	5325-01-255-1126	235	6
31272	BLC5LA13S	5315-00-765-2190	279	19
74159	BLM8S18	5940-00-114-1315	75	6
55509	BM2337	3110-00-100-5920	150	22
4A439	BN252	4730-01-357-6523	385	5
99017	BPF-3-1/2	5340-01-194-0887	270	7
		5340-01-194-0887	340	5
99017	BPF-3/8-3	5340-01-194-0888	270	27
13940	BS 78505	5325-00-371-8108	224	12
		5325-00-371-8108	316	2
		5325-00-371-8108	316	6
		5325-00-371-8108	319	3
		5325-00-371-8108	322	3
		5325-00-371-8108	324	3
		5325-00-371-8108	375	2
		5325-00-371-8108	375	5
		5325-00-371-8108	378	2
		5325-00-371-8108	378	5
33287	BT-33-73F	6635-01-093-3710	499	1
78553	C-14329-8A04	5310-01-273-1635	64	20
82484	C-1703	5340-01-211-5593	327	7
98349	C-205-TEZ-35	2530-01-188-3685	144	8
		2530-01-188-3685	152	8
80604	C-4171	5120-01-026-1666	511	9
78553	C-8036-832	5310-01-272-5464	300	10
98410	C-828-06	5940-00-204-8990	367	13
98410	C-828-08	5940-00-143-4775	367	14
98410	C-828-10	5940-00-143-4794	72	10
98410	C-840-38	5940-00-113-9826	86	34
70472	C0360-045-1250S	5360-01-118-5907	274	3
		5360-01-118-5907	276	29
73821	C0720-081-1500S	5360-01-218-1608	286	3
73821	C0850-081-2250-M	5360-01-255-9899	205	30
75272	C0V0709Z1	5340-01-071-2047	124	12
30327	C110-10	4720-00-241-4435	BULK	24
01976	C17	5310-00-261-7340	341	8
78553	C183-012-4	5310-01-213-1333	269	21
07860	C21452	2590-00-473-6331	392	6
15434	C2798	5315-00-012-0123	144	13
81349	C3030	5325-00-184-9846	89	16
		5325-00-184-9846	368	10

CROSS REFERENCE INDEXES

PART NUMBER INDEX

CAGE	PART NUMBER	STOCK NUMBER	FIGURE NO	ITEM NO
08627	C3254	5340-01-209-7808	149	13
16004	C43974	4010-00-585-2108	BULK	2
78553	C46021-1024A-1	5310-01-186-3483	222	13
57958	C5136336	5340-01-308-2168	482	20
57958	C5136338	5330-01-309-4340	482	16
57958	C5136341	4010-01-308-9168	482	6
57958	C5136342	5340-01-308-3851	484	3
57958	C5136359	2590-01-307-9303	468	14
78553	C596-1024-24	5310-01-275-1189	222	14
03487	C766	5305-00-993-0190	43	37
		5305-00-993-0190	297	7
72800	C7685-10A	5310-01-194-7066	199	56
		5310-01-194-7066	208	7
		5310-01-194-7066	331	34
78563	C7740-1420	5310-01-253-6439	203	14
78553	C8117-1024	5310-01-215-5356	199	31
		5310-01-215-5356	331	18
71468	CA121003-3	5935-01-460-5508	458	45
71468	CA3106E28-21S-B-F80	5935-01-397-0201	86	28
97403	CARX5-583027	5325-00-720-8064	245	4
28818	CF40BH52	2590-01-312-7355	BULK	44
99862	CL7AHK4T	5355-01-032-7430	293	23
81348	CMDX2-3PT573036	5340-00-809-1492	77	4
		5340-00-809-1492	83	5
		5340-00-809-1492	84	29
		5340-00-809-1492	88	13
		5340-00-809-1492	96	22
		5340-00-809-1492	125	12
		5340-00-809-1492	315	10
		5340-00-809-1492	444	7
		5340-00-809-1492	478	2
75272	COV-0909	5340-00-385-8820	17	11
		5340-00-385-8820	27	12
75272	COV-1109Z1	5340-01-153-9425	177	14
75272	COV-1309	5340-01-101-8262	18	2
75272	COV-1609	5340-01-229-3632	5	5
75272	COV-3311	5340-01-210-0692	17	18
75272	COVO7O9Z1	5340-01-071-2047	18	12
78500	CPL6N8	2520-00-352-2168	169	29
19207	CPR104420-1	4720-01-058-7213	443	11
		4720-01-058-7213	BULK	61
19207	CPR104420-1-17		135	1
19207	CPR104420-1-24		135	8
34623	CPR104420-1-26		12	6
19207	CPR104420-1-28		12	6
19207	CPR104420-1-4		141	4
			457	3
19207	CPR104420-1-40		443	16

CROSS REFERENCE INDEXES

PART NUMBER INDEX

CAGE	PART NUMBER	STOCK NUMBER	FIGURE NO	ITEM NO
19207	CPR104420-1-70		313	6
			457	1
19207	CPR104420-2	4720-01-014-4915	BULK	62
63769	CR 535094-60	5330-01-203-6551	142	2
		5330-01-203-6551	143	2
		5330-01-203-6551	150	2
		5330-01-203-6551	151	2
11815	CR-212-6-4	5320-01-136-1785	219	4
		5320-01-136-1785	287	14
		5320-01-136-1785	290	8
11815	CR-212-6-5	5320-01-273-0020	287	15
11815	CR-213-4-2	5320-01-258-2576	208	12
11815	CR-213-4-5	5320-01-259-7423	226	2
		5320-01-259-7423	237	5
11815	CR-213-6-2	5320-01-143-5075	213	36
		5320-01-143-5075	214	29
11815	CR-213-6-3	5320-01-135-7319	211	3
		5320-01-135-7319	213	37
		5320-01-135-7319	214	30
		5320-01-135-7319	218	1
		5320-01-135-7319	219	1
		5320-01-135-7319	237	17
		5320-01-135-7319	292	5
		5320-01-135-7319	365	1
		5320-01-135-7319	384	14
11815	CR-213-6-5	5320-01-084-9235	224	15
		5320-01-084-9235	287	3
11815	CR-213-6-8	5320-01-273-4601	224	10
		5320-01-273-4601	294	8
11815	CR-3213-6-5	5320-01-084-9235	212	8
11815	CR-3213-6-6	5320-01-084-9234	211	24
11815	CR3212-6-3	5320-01-084-6101	197	26
		5320-01-084-6101	199	37
		5320-01-084-6101	290	10
11815	CR3212-6-5	5320-01-136-1787	288	3
11815	CR3212-6-7	5320-01-086-1147	287	16
11815	CR3213-4-3	5320-01-138-4239	219	10
		5320-01-138-4239	235	4
		5320-01-138-4239	235	18
11815	CR3213-6-06	5320-01-084-9234	212	23
		5320-01-084-9234	260	17
11815	CR3213-6-1	5320-01-085-1755	211	23
11815	CR3213-6-2	5320-01-143-5075	197	27
		5320-01-143-5075	199	35
		5320-01-143-5075	220	6
		5320-01-143-5075	300	15
11815	CR3213-6-3	5320-01-135-7319	197	11
		5320-01-135-7319	199	15
		5320-01-135-7319	227	39

CROSS REFERENCE INDEXES

PART NUMBER INDEX

CAGE	PART NUMBER	STOCK NUMBER	FIGURE NO	ITEM NO
11815	CR3213-6-4	5320-01-136-1782	197	8
		5320-01-136-1782	199	17
		5320-01-136-1782	212	9
		5320-01-136-1782	287	1
		5320-01-136-1782	289	6
11815	CR3213-6-5	5320-01-084-9235	197	24
		5320-01-084-9235	199	38
11815	CR3213-6-7	5320-01-085-9995	197	19
		5320-01-085-9995	199	20
		5320-01-085-9995	287	28
11815	CR3213-6-8	5320-01-086-1144	223	5
11815	CR3213-6-9	5320-01-086-1143	197	10
		5320-01-086-1143	199	16
11815	CR3242-6-2	5320-01-033-8643	205	19
11815	CR3242-6-4	5320-01-033-9126	208	35
11815	CR3243-6-3	5320-01-033-8638	208	39
11815	CR3243-6-4	5320-01-033-8637	208	23
11815	CR3243-6-5	5320-01-034-1884	321	24
		5320-01-034-1884	376	22
06090	CRN1RED	5970-00-827-6566	44	14
		5970-00-827-6566	313	14
60380	CRS22CP	3110-00-162-3766	286	12
16236	CS-4520-SV-0705	4520-00-217-5782	345	30
		4520-00-217-5782	348	29
7Z588	CT250L	4730-01-329-9151	29	11
75272	CWV-0407	5340-01-215-5478	333	30
33116	D00-09102	2530-01-174-7441	156	1
64878	D100-MIL-1	5180-01-201-4978	504	10
24866	D12604	2540-01-184-5503	327	21
81346	D1785	4710-00-228-2177	BULK	45
07860	D21059-16	5310-00-080-6004	8	13
		5310-00-080-6004	12	21
		5310-00-080-6004	97	7
		5310-00-080-6004	133	5
		5310-00-080-6004	155	18
		5310-00-080-6004	251	5
		5310-00-080-6004	270	32
		5310-00-080-6004	274	11
		5310-00-080-6004	275	2
81361	D5-19-1754	4240-00-565-6059	307	2
		4240-00-565-6059	308	8
81361	D5-19-2353	4240-01-026-3112	307	1
		4240-01-026-3112	308	7
62161	D528235-H1	2640-01-419-6200	167	27
84760	DB2829-4523	2910-01-199-2355	10	2
84760	DB2829-4879	2910-01-326-9221	10	2
84760	DB2831-5149	2910-01-414-1272	10	2
84760	DB2831-5209	2910-01-467-9029	10	2
93061	DC603-2	4820-00-752-9040	29	9

CROSS REFERENCE INDEXES

PART NUMBER INDEX

CAGE	PART NUMBER	STOCK NUMBER	FIGURE NO	ITEM NO
5A910	DC8218	6220-01-107-2613	62	2
34904	DC8226	5330-01-076-6172	62	10
13873	DGSCV-91-157	6220-01-128-0087	62	4
1FH08	DIN933M10X20	5306-01-158-9917	12	22
60827	DP3-01-01	6680-01-482-4995	176A	14
02126	DR-T10X3/4	5305-01-006-5736	74	5
		5305-01-006-5736	303	11
68505	DRA-3002D	2920-01-187-1310	45	8
70308	E06879-00	2540-01-203-0183	230	18
72658	E06879-00	2540-01-203-0183	235	10
01568	E1000-105-3500M	5360-01-255-2808	243	33
30327	E14A	4730-00-254-6211	334	9
7X868	E19250-00	2540-01-315-3358	234	2
81361	E5-19-1782	4240-00-807-6856	311	7
		4240-00-807-6856	312	3
34623	EC-RCSK1834-3-1	5340-01-412-3563	105	26
34623	EC112338639-2B1	2510-01-189-9744	206	17
34623	EC12338083	5340-01-197-6755	277	49
34623	EC12339050	5306-01-465-1564	137	3
34623	EC12460241B1	5340-01-432-8681	160	25
		5340-01-432-8681	162	19
		5340-01-432-8681	487A	5
34623	EC12460245B1	5340-01-432-4877	182	15
34623	EC12460253B1	5340-01-437-8751	182	12
34623	EC12460284B1	2510-01-457-0949	183	22
34623	ECEX4939B1	5340-01-457-5734	44	8
02978	ERNA245	5310-00-584-5272	69	2
		5310-00-584-5272	103	19
		5310-00-584-5272	174	7
		5310-00-584-5272	240	2
		5310-00-584-5272	240	12
		5310-00-584-5272	271	16
		5310-00-584-5272	271	28
		5310-00-584-5272	277	39
		5310-00-584-5272	453	2
34623	ET029	4720-01-185-6673	BULK	22
34623	EX4228-2	5340-01-434-8109	160	17
		5340-01-434-8109	162	24
		5340-01-434-8109	487A	5
34623	EX4231-3	4710-01-434-3151	160	19
		4710-01-434-3151	162	20
		4710-01-434-3151	487A	7
34623	EX4231-4	4710-01-434-3157	160	24
		4710-01-434-3157	162	23
		4710-01-434-3157	487B	7
34623	EX4233	4710-01-434-3037	160	21
		4710-01-434-3037	487A	13
34623	EX4234	4710-01-434-3159	162	21
		4710-01-434-3159	487C	4

CROSS REFERENCE INDEXES

PART NUMBER INDEX

CAGE	PART NUMBER	STOCK NUMBER	FIGURE NO	ITEM NO
34623	EX4319	7690-01-473-4550	356	3
34623	EX4717-1	5340-01-458-7156	162	12
		5340-01-458-7156	487D	1
34623	EX4717-2	5340-01-458-7147	162	26
		5340-01-458-7147	487D	1
34623	EX4786-4	4720-01-456-2955	162	7
34623	EX5061	7690-01-476-2855	354	12
19207	EX5063		180	1
34623	EXCE4718	5340-01-458-8236	160	23
		5340-01-458-8236	487B	6
78940	F-6D9K090B	2940-01-189-1809	12	3
29944	F07011	2540-01-315-3143	234	2
		2540-01-315-3143	239	1
27182	F35SRBXXBZXX	5340-01-271-6461	296	11
57526	F6TZ9B076A-A	5325-01-210-2870	15	5
		5325-01-210-2870	16	5
55719	FAM7E	5120-01-437-3658	505	5
01276	FB9665-02	4720-01-257-3705	5	11
16717	FB9778-01	4720-01-213-1574	178	11
55719	FC18B	5120-01-335-1094	505	1
55719	FC22B	5120-01-335-1096	505	1
55719	FC28B	5120-01-335-1099	505	1
55719	FC30B	5120-01-335-1100	505	1
55719	FCOM14	5120-01-079-8023	505	1
01276	FF3323-0706-259	4730-01-493-4056	176A	24
01276	FF90154-18		175A	2
01276	FF9311-36	4730-00-909-8627	379	34
16632	FLX400132057600	4720-01-299-8469	337	20
95760	FP-161	5340-01-274-7337	258	1
		5340-01-274-7337	259	9
55719	FTX40E	5120-01-367-3536	510	8
62161	G 6793	2530-01-386-5499	167	18
34623	G-00271166	5310-01-251-0760	62	13
34623	G-00271482	5310-01-272-1356	56	4
34623	G-11500829	5306-01-254-2357	174	10
34623	G-11501940	5306-01-251-9190	75	47
		5306-01-251-9190	174	4
75535	G-408-3/8	4030-01-256-0471	314	19
		4030-01-256-0471	458	40
34623	G0045696	5305-01-272-9034	339	23
12204	G121224	5315-01-206-7135	293	34
34634	G167084	5305-01-210-6249	325	1
24161	G3336US-10	4720-00-006-9541	BULK	10
34623	G45637	5315-01-218-1114	245	40
57733	G488213	2540-00-039-8258	56	13
78385	G704177	2540-01-165-8175	345	31
		2540-01-165-8175	348	25
78385	G704183	5935-01-163-8981	348	2
78385	G704213	2540-01-164-6170	348	9

CROSS REFERENCE INDEXES

PART NUMBER INDEX

CAGE	PART NUMBER	STOCK NUMBER	FIGURE NO	ITEM NO
78385	G704232	2540-01-165-0465	345	19
		2540-01-165-0465	348	19
78385	G704234	5935-01-163-8987	348	8
78385	G704284	2540-01-165-0814	350	2
		2540-01-165-0814	351	1
78385	G704288-1	2540-01-165-8176	345	29
		2540-01-165-8176	348	31
78385	G704293	5340-01-165-0745	348	30
78385	G704373	6150-01-165-4667	345	26
		6150-01-165-4667	348	24
78385	G704554	2540-01-008-1501	348	26
78385	G706014	2540-01-289-8328	345	28
78385	G706016	2540-01-253-6112	349	16
78385	G706024		349	14
78385	G706026	6150-01-293-4074	349	6
78385	G706033	5340-01-290-6331	345	3
78385	G706034		345	16
78385	G706035	2540-01-289-8329	345	39
78385	G706037	2540-01-162-4339	348	35
78385	G706039		350	11
78385	G706052-13	6150-01-287-9925	349	1
78385	G706052-15	6150-01-287-9924	349	2
78385	G706052-17	6150-01-287-9926	349	13
78385	G706052-19	6150-01-287-9923	349	10
78385	G706052-21	6150-01-287-9917	345	43
78385	G706052-25	6150-01-287-9918	345	9
78385	G706052-9	6150-01-291-4809	345	41
78385	G706055	4520-01-284-7099	345	22
		4520-01-284-7099	KITS	7
78385	G706057	6110-01-285-3902	349	9
78385	G706064	2540-01-284-7091	345	2
78385	G706133	2540-01-168-9481	351	11
09527	GG0490	6685-01-180-9037	47	9
09527	GG0552	6620-01-181-1757	47	11
01276	GG308-NP08-18	4730-01-358-8538	175A	1
72794	GH7	5325-01-266-8414	207	2
		5325-01-266-8414	208	20
19728	GK-174A		45	39
7X677	GM8670757	5306-01-150-4835	104	4
97783	GR011RED	9905-00-205-2795	212	10
82484	GS-2176	2540-01-422-0253	327	1
76599	H12SS	4730-00-908-3194	268	32
81718	H2525M	5310-00-637-9541	89	7
		5310-00-637-9541	205	35
		5310-00-637-9541	401	12
50992	H38C-2619	4820-01-189-2107	333	37
76599	H68SS	4730-01-189-0871	12	7
11815	H749A-456	5130-01-104-5370	504	11
88818	H795220608	5305-00-889-3000	43	34

CROSS REFERENCE INDEXES

PART NUMBER INDEX

CAGE	PART NUMBER	STOCK NUMBER	FIGURE NO	ITEM NO
54979	HC-9.56	4010-01-203-0411	243	17
0HDW7	HC3213-4-04	5320-01-143-5079	230	24
K5667	HE11595		175A	6
K5667	HE1250079/100		175A	5
K5667	HE1290019	5305-01-491-2143	175A	9
K5667	HE206000	5310-01-491-2014	175A	8
K5667	HE260128		175A	4
35708	HS32	4730-00-204-3491	29	1
		4730-00-204-3491	177	6
78947	HS49745	5340-01-195-8837	269	22
78947	HS49746	5340-01-196-8158	269	23
7Z588	HTM-1200	4730-01-210-5785	12	35
21102	HV032504	2540-01-282-8562	300	16
21002	HV033596	5905-01-270-0966	342	3
21102	HV034186	2540-01-276-5935	224	7
24825	I F-5	2510-01-250-7594	227	26
24825	IF-3	2510-01-250-7595	227	25
55883	IPD8S5128	2530-01-069-0906	45	27
25341	J-21362	4910-01-178-6551	511	7
33287	J-21370-10	5120-01-423-0032	510	2
25341	J-21370-A	4910-01-178-0722	500	3
33287	J-21552	5120-01-179-1032	503	8
33287	J-21777-43	5120-01-366-9468	512	3
25341	J-23327	4910-01-178-0724	510	1
60380	J-2416	3110-01-155-4440	130	38
33287	J-25018-A	5120-01-410-8216	510	4
25341	J-29162	4910-01-179-5530	502	3
25341	J-29167	5120-01-170-3278	501	3
25341	J-29168	5120-01-169-4876	501	2
25341	J-29642-C	5180-01-267-2907	509	1
25341	J-33043	4820-01-179-4869	511	15
33287	J-33149-A	5120-01-218-8235	502	5
33287	J-33826	5120-01-357-3633	501	15
33287	J-33829	5120-01-357-3629	501	16
33287	J-33831	5120-01-357-3632	501	12
33287	J-33832		511	10
33287	J-33833	5120-01-357-3630	501	17
33287	J-33839	5120-01-357-3631	501	18
33287	J-33843	5120-01-361-3101	501	14
33287	J-34175-4	5120-01-366-0894	512	9
33287	J-35199	5180-01-216-8643	502	7
33287	J-35209	4730-01-042-5266	505	17
33287	J-35307	5120-01-265-4872	501	6
33287	J-35506-2	5120-01-366-6260	512	7
33287	J-35506-3	5120-01-366-0895	512	5
33287	J-37789-A	5120-01-422-1308	510	6
33287	J-38655	5120-01-422-1326	510	7
33287	J-38731	5180-01-422-0138	510	11
33287	J-38731-1	5120-01-422-0173	510	12

CROSS REFERENCE INDEXES

PART NUMBER INDEX

CAGE	PART NUMBER	STOCK NUMBER	FIGURE NO	ITEM NO
33287	J-38731-2	5120-01-422-0219	510	13
33287	J-38731-3	5120-01-422-0139	510	14
33287	J-38732	5120-01-422-1301	511	5
33287	J-38732-1	5120-01-422-1293	511	6
33287	J-38734	5120-01-422-1329	510	10
33287	J-38736-1	5120-01-422-1310	510	16
33287	J-38736-2	5120-01-422-5406	510	17
33287	J-38736-3	5120-01-422-5411	510	18
33287	J-38736-4	5120-01-422-1318	510	19
33287	J-38736-5	5120-01-422-1324	510	20
33287	J-38736-6	5120-01-408-7051	510	15
		5120-01-408-7051	510	21
33287	J-38737	5120-01-422-1313	510	3
33287	J-38739	5180-01-422-1294	511	1
33287	J-38739-1	5120-01-422-1297	511	2
33287	J-38739-2	5120-01-422-1302	511	3
33287	J-38739-3	5120-01-422-1306	511	4
33287	J-38868-A	5120-01-422-1300	510	5
33287	J-39084	5120-01-422-0334	510	9
33287	J-39250	5120-01-335-5847	505	6
33287	J-39250-1		505	11
33287	J-39524-1	5120-01-366-2520	512	2
33287	J-39524-2	5120-01-366-0893	512	1
33287	J-39524-4	5140-01-366-0642	512	8
33287	J-39524-5	5120-01-366-4713	512	6
25341	J-6278	5120-01-082-6447	503	7
33287	J-9276-3	5120-01-357-9123	501	19
03787	J0082	9905-00-202-3639	330	2
27182	J105CCLXBZ02	5342-01-264-6532	211	2
25341	J21359-A	5120-01-176-1845	500	5
33287	J21465-01	5180-01-195-9777	500	2
33287	J21664	4910-01-210-1318	499	6
33287	J21786	5120-01-185-7957	502	9
33287	J21787	5120-01-187-3660	502	1
25341	J21795-02	4910-01-178-8865	499	5
33287	J22661	5120-01-227-1680	501	13
33287	J24396	4910-01-209-0729	500	6
33287	J25033-B	4910-01-179-2517	503	5
33287	J25323-1	3020-01-255-2906	504	7
33287	J25323-16	4820-01-252-6169	504	4
33287	J25323-17	4720-01-253-2809	504	3
33287	J25323-18	4720-01-253-2810	504	5
33287	J25323-2	4730-01-254-6023	504	6
33287	J25323-5	6685-01-256-3406	504	8
33287	J25323-7	6680-01-253-6782	504	9
33287	J26999-30	4910-01-238-2551	505	14
33287	J29163	5120-01-195-2721	501	4
33287	J29166	5120-01-196-0084	501	1
33287	J29169	5120-01-185-7955	501	5

CROSS REFERENCE INDEXES

PART NUMBER INDEX

CAGE	PART NUMBER	STOCK NUMBER	FIGURE NO	ITEM NO
33287	J29170	5120-01-195-4551	501	11
33287	J29174	5120-01-185-7960	501	21
33287	J29185	5120-01-185-7956	501	8
33287	J29185-2	5120-01-247-6629	501	7
33287	J29369	5120-01-201-7857	501	20
33287	J3289-20	5120-01-144-4484	499	3
33287	J33127	5180-01-186-3114	499	8
33287	J33141	4910-01-231-1709	504	1
33287	J33142	5120-01-187-3659	502	4
33287	J33143	5120-01-187-3607	503	1
33287	J33144	5120-01-185-7963	503	2
33287	J35184	5120-01-229-0842	503	3
33287	J38869	5120-01-414-1849	511	14
33287	J39636	5120-01-389-9992	501	22
27182	J4501XXBZ01	5306-01-265-8897	287	31
		5306-01-265-8897	294	7
27182	J450XXLXBZ01	2540-01-385-7497	289	8
33287	J4670-01	5120-01-210-8793	499	2
27182	J50062XXBZ01	5340-01-276-6673	211	12
		5340-01-276-6673	212	6
27182	J500IHXXBZ01	5340-01-265-8911	211	25
		5340-01-265-8911	212	28
		5340-01-265-8911	213	27
		5340-01-265-8911	214	22
81343	J512	4730-00-278-3828	17	5
33287	J6221	5120-01-185-7965	503	9
33287	J6471-2	5120-01-130-8865	500	4
33287	J6471-8	5120-01-391-5131	501	9
33287	J6692	4910-00-785-6437	505	15
25341	J7624	5120-01-082-6436	503	6
33287	J7818	5120-01-185-8024	501	10
33287	J8092	5120-00-677-2259	500	1
33287	J8608	5120-01-185-7962	502	8
33287	J8611-01	5120-01-185-7964	502	2
33287	J8763-B	5120-01-198-7583	499	4
27182	J8UBXXFXBZ01	5340-01-265-8859	292	12
27182	J95CCXRXBZ01	5340-01-310-1658	214	12
27182	J95CCXXXBZ02	5340-01-310-1189	213	16
81343	JAE J1508	4730-00-908-3193	365	10
81343	JAEJ1508	4730-00-908-3193	301	4
		4730-00-908-3193	303	6
		4730-00-908-3193	304	2
		4730-00-908-3193	368	14
59556	K-500-PC-0001	5315-00-842-3044	101	1
78189	K1224	5310-00-995-4130	72	8
78940	L-111D30	2940-01-188-5117	12	23
78940	L-111DR30-L		12	24
98349	L-18-CPS-5-A-10	5340-01-191-8161	170	16
		5340-01-191-8161	195	5

CROSS REFERENCE INDEXES

PART NUMBER INDEX

CAGE	PART NUMBER	STOCK NUMBER	FIGURE NO	ITEM NO
98349	L-18-SV-5150-C-12	2530-01-197-2160	170	17
		2530-01-197-2160	195	6
98349	L-18-SV-5151-C-12	2530-01-189-2195	170	11
98349	L-18-VT-5276-B-11	2530-01-194-2049	170	10
98349	L-18-VT-5277-B-11	2510-01-205-6089	195	3
98349	L-20-MA-132-A-11	2530-01-252-8362	170	7
98349	L-20-MA-133-A-11	2530-01-249-1577	170	2
78940	L-223C24	5340-01-190-0402	12	29
46717	L-3604-13	4730-00-877-6298	436	5
78940	L-563C170	2940-01-188-3387	12	28
78940	L-638C2GS	2520-01-024-1273	12	31
46717	L-6493-1	5310-00-045-4007	84	25
16563	LD-1501	4720-01-187-3387	7	7
60038	LM603049LM603012	3110-00-892-0896	148	19
84256	LT1504-C6-08	1640-01-072-1167	433	5
10177	M-200-60-EP	5325-01-187-1604	26	2
92830	M-C1100-096-0875	5360-01-190-6218	99	15
81349	M13486/1-11	6145-00-538-8219	BULK	69
81349	M13486/1-14	6145-00-705-6674	BULK	70
81349	M13486/1-4	6145-01-341-9591	BULK	67
81349	M13486/1-5	6145-00-152-6499	81	17
81349	M13486/1-9	6145-00-538-8222	BULK	68
81349	M13516/1-1	5925-00-026-4767	380	4
		5925-00-026-4767	385	12
61465	M2025103	5310-00-167-0821	101	2
		5310-00-167-0821	382	9
		5310-00-167-0821	390	8
61208	M2046S	5310-00-595-7237	482	13
81343	M23053/15-112-0	5970-01-276-7753	BULK	41
81349	M23053/15-112-0-.75		94	7
81349	M23053/15-112-2		BULK	42
81349	M23053/15-112-2-.75		94	2
81349	M23053/15-202-0	5970-01-359-7836	98	12
81349	M23053/4-103-0	5970-01-048-9378	485	4
81349	M23053/4-202-2		BULK	29
81349	M23053/4-202-2-2		95	23
81349	M23053/4-203-2		BULK	30
81349	M23053/4-203-2-3		95	13
81349	M23053/4-302-0	5970-01-161-6796	BULK	31
81349	M23053/4-302-0-.75		93	3
81349	M23053/4-302-2		BULK	32
81349	M23053/4-302-2-2		95	8

CROSS REFERENCE INDEXES

PART NUMBER INDEX

CAGE	PART NUMBER	STOCK NUMBER	FIGURE NO	ITEM NO
81349	M23053/4-303-0		BULK	33
81349	M23053/4-303-0-.75		93	5
81349	M23053/4-303-0-1		85	32
81349	M23053/4-303-0-3	5970-01-142-2282	96	17
81349	M23053/4-303-2		BULK	34
81349	M23053/4-303-2-3		95	18
			96	8
81349	M23053/4-304-0	5970-01-163-1103	BULK	35
81349	M23053/4-304-0-1		69	37
81349	M23053/4-304-2		BULK	36
81349	M23053/4-304-2-2		474	12
81349	M23053/4-304-2-4		95	11
81349	M23053/6-103-6	5970-00-724-1910	91	6
		5970-00-724-1910	BULK	37
81349	M23053/6-104-2	5970-01-049-9948	BULK	38
81349	M23053/6-104-2-4		91	3
81349	M23053/6-107-0	5790-01-031-0736	BULK	39
81349	M23053/6-107-0-7		90	4
			92	9
81349	M23053/6-107-1	5970-00-724-1907	BULK	40
81349	M23053/6-107-1-7		92	7
81349	M23469/2-30605	5320-01-333-5545	197	21
		5320-01-333-5545	199	47
81349	M23469/2-50809		199	29
81349	M24066-2-354	5340-01-282-1115	311	15
81349	M24243/1-A403	5320-00-083-5009	270	17
		5320-00-083-5009	311	17
		5320-00-083-5009	317	8
		5320-00-083-5009	321	9
		5320-00-083-5009	325	18
		5320-00-083-5009	332	15
		5320-00-083-5009	354	13
		5320-00-083-5009	355	3
		5320-00-083-5009	373	7
		5320-00-083-5009	376	8
		5320-00-083-5009	376	12
81349	M24243/1-A404	5320-01-023-2529	65	18
		5320-01-023-2529	198	1
		5320-01-023-2529	199	10
		5320-01-023-2529	225	22
		5320-01-023-2529	229	2
		5320-01-023-2529	316	8
		5320-01-023-2529	318	10
		5320-01-023-2529	324	15
		5320-01-023-2529	370	11
81349	M24243/1-A405	5320-01-029-8205	239	8
81349	M24243/1-B604	5320-00-493-4101	300	8
81349	M24243/1-D404	5320-00-865-8994	498	15

CROSS REFERENCE INDEXES

PART NUMBER INDEX

CAGE	PART NUMBER	STOCK NUMBER	FIGURE NO	ITEM NO
81349	M24243/1A402	5320-01-019-5694	355	3
		5320-01-019-5694	370	21
		5320-01-019-5694	371	2
81349	M24243/1A404	5320-01-023-2529	28	4
		5320-01-023-2529	320	6
		5320-01-023-2529	320	29
		5320-01-023-2529	324	37
02768	M36-0790-10	5325-01-257-0801	268	23
81349	M43436/1-3	9905-00-893-3570	41	4
		9905-00-893-3570	41	9
		9905-00-893-3570	41	18
		9905-00-893-3570	44	15
		9905-00-893-3570	44	21
		9905-00-893-3570	44	26
		9905-00-893-3570	69	13
		9905-00-893-3570	69	22
		9905-00-893-3570	69	27
		9905-00-893-3570	69	38
		9905-00-893-3570	72	6
		9905-00-893-3570	72	18
		9905-00-893-3570	73	20
		9905-00-893-3570	73	24
		9905-00-893-3570	81	6
		9905-00-893-3570	81	12
		9905-00-893-3570	94	3
		9905-00-893-3570	474	13
		9905-00-893-3570	480	19
		9905-00-893-3570	480	28
		9905-00-893-3570	480	33
81349	M43436/1-4	9905-00-945-7637	86	2
		9905-00-945-7637	94	4
		9905-00-945-7637	480	14
81349	M43436/3-1	9905-01-013-8723	65	6
		9905-01-013-8723	65	14
		9905-01-013-8723	75	3
		9905-01-013-8723	76	3
		9905-01-013-8723	79	8
		9905-01-013-8723	80	3
		9905-01-013-8723	81	4
		9905-01-013-8723	81	10
		9905-01-013-8723	81	16
		9905-01-013-8723	83	2
		9905-01-013-8723	84	30
		9905-01-013-8723	85	2
		9905-01-013-8723	89	3
		9905-01-013-8723	90	3
		9905-01-013-8723	91	4
		9905-01-013-8723	92	5
		9905-01-013-8723	93	7

CROSS REFERENCE INDEXES

PART NUMBER INDEX

CAGE	PART NUMBER	STOCK NUMBER	FIGURE NO	ITEM NO
		9905-01-013-8723	95	3
		9905-01-013-8723	96	3
96906	M45912/3-6FG8C	5310-00-814-0672	144	4
		5310-00-814-0672	152	4
		5310-00-814-0672	272	24
81349	M45913-4FG8C	5310-00-935-9022	393	12
81349	M45913/1-4CG5C	5310-00-088-1251	50	13
		5310-00-088-1251	169	12
81349	M45913/3-4FG8C	5310-00-935-9022	411	19
81349	M45913/3-5FG8C	5310-00-241-6658	199	1
		5310-00-241-6658	277	35
		5310-00-241-6658	321	30
		5310-00-241-6658	402	8
81349	M45913/3-6CG8P	5310-01-249-0904	461	5
34623	M46792 2-1	2540-01-194-3323	368	19
81349	M5501/11-F1	5340-01-174-4894	370	23
		5340-01-174-4894	394	3
81349	M5501/11-F5	5340-00-727-4774	394	1
81349	M5501/11-F7	5340-01-167-9314	394	2
81349	M5501/7-F2	5340-01-026-3250	203	10
		5340-01-026-3250	378	12
60038	M802048M802011	3110-00-406-9608	148	18
81349	M83413/8-A05BD	6150-00-242-4885	313	24
81349	M83461/1-020	5331-01-107-4950	6	2
81349	M83461/1-029	5331-01-336-3236	73	13
81349	M83461/1-030	5331-01-392-1793	73	11
81349	M83461/1-208	5331-01-392-0830	73	15
81349	M83461/1-236	5331-01-183-0971	6	8
81349	M85049/52-1-24W	5935-01-174-3669	75	19
43334	M88048M88010	3110-00-854-1504	148	6
34623	MA128-21182	5330-01-037-0663	62	9
19728	MAD-110A		45	68
19728	MAW-37		45	53
19728	MBD-233B		45	64
19728	MBD-2566		45	38
19728	MBD-438		45	55
19728	MBD-439		45	63
19728	MBD-442		45	56
19728	MBD-444		45	54
19728	MCS-47A		45	11
24975	MEL50	3120-00-450-1905	45	18
19728	MES-117A		45	13
19728	MES-61		45	16
19728	MES-71A		45	71
19728	MES-72		45	72
19728	MES-78A		45	77
19728	MES-91		45	75
19728	MES-93		45	74
19728	MES-94		45	73

CROSS REFERENCE INDEXES

PART NUMBER INDEX

CAGE	PART NUMBER	STOCK NUMBER	FIGURE NO	ITEM NO
68505	MES-95S	5330-00-138-0251	45	41
68505	MEU-2042B	3010-01-068-6996	45	12
19728	MFJ-13A		45	46
24975	MFJ-2012BS	5977-01-189-4988	KITS	8
19728	MFJ-28A		45	70
24975	MFY-1064B	5977-01-324-6323	45	45
68505	MFY-109	2920-01-211-4935	45	79
19728	MFY-117		45	69
19728	MFY-133		45	7
19728	MFY-19		45	48
68505	MFY-19S	5360-01-190-7234	KITS	9
19728	MFY-21		45	66
19728	MFY-2101SS		45	42
68505	MFY-2130	2990-01-205-5981	45	2
19728	MFY-25		45	6
19728	MFY-53		45	10
19728	MFY-63		45	15
68505	MFY-6701UT	2920-01-168-7891	44	2
68505	MFY1102S	2920-01-212-4976	45	67
9K475	MGLP-B6-4	5320-01-271-6357	71	9
		5320-01-271-6357	199	12
		5320-01-271-6357	211	10
		5320-01-271-6357	213	2
		5320-01-271-6357	214	23
		5320-01-271-6357	215	1
		5320-01-271-6357	216	11
		5320-01-271-6357	217	7
		5320-01-271-6357	220	3
		5320-01-271-6357	245	36
		5320-01-271-6357	261	8
		5320-01-271-6357	289	22
		5320-01-271-6357	291	1
		5320-01-271-6357	293	3
		5320-01-271-6357	295	1
		5320-01-271-6357	296	14
		5320-01-271-6357	297	1
		5320-01-271-6357	298	3
		5320-01-271-6357	299	4
		5320-01-271-6357	300	7
		5320-01-271-6357	307	8
		5320-01-271-6357	308	10
		5320-01-271-6357	334	2
		5320-01-271-6357	343	1
		5320-01-271-6357	347	10
81349	MIL-DTL-49513/3	5310-00-935-9022	64	29
		5310-00-935-9022	368	18
		5310-00-935-9022	379	22
		5310-00-935-9022	380	14
		5310-00-935-9022	484	12

CROSS REFERENCE INDEXES

PART NUMBER INDEX

CAGE	PART NUMBER	STOCK NUMBER	FIGURE NO	ITEM NO
81349	MIL-P-18066	5530-00-641-6069	BULK	47
81361	MIL-PRF-51193E	4240-01-365-0982	307	15
		4240-01-365-0982	308	3
81349	MIL-PRF-62550/3	2540-01-194-3323	345	1
81349	MIL-W-83420/14IN		275	10
			276	6
19728	ML-128A		45	40
19728	ML-129	5310-00-883-2237	45	1
76599	MMF4-SS	4730-01-118-8278	13	6
		4730-01-118-8278	14	6
		4730-01-118-8278	19	11
		4730-01-118-8278	27	4
		4730-01-118-8278	124	9
		4730-01-118-8278	177	2
		4730-01-118-8278	334	16
		4730-01-118-8278	386	7
34623	MS-00034206-221	5305-01-255-4950	274	22
96906	MS-35338-45	5310-00-407-9566	180	12
		5310-00-407-9566	454	3
		5310-00-407-9566	473	5
		5310-00-407-9566	474	8
		5310-00-407-9566	487	15
		5310-00-407-9566	175A	13
96906	MS122031	5310-00-285-7037	269	28
96906	MS122083	5325-00-331-4774	43B	11
96906	MS15001-1	4730-00-050-4203	136	9
		4730-00-050-4203	136	18
		4730-00-050-4203	136	22
		4730-00-050-4203	137	8
		4730-00-050-4203	137	11
		4730-00-050-4203	137	23
		4730-00-050-4203	144	9
		4730-00-050-4203	144	19
		4730-00-050-4203	152	9
		4730-00-050-4203	152	19
		4730-00-050-4203	170	8
96906	MS15001-3	4730-00-050-4205	170	12
		4730-00-050-4205	170	18
		4730-00-050-4205	195	7
96906	MS15001-4	4730-00-050-4207	191	25
96906	MS15002-1	4730-00-172-0010	169	16
96906	MS15795-808	5310-00-619-1148	482	12
80205	MS15795-812	5310-00-625-5756	43B	16
80205	MS15795-815	5310-00-595-6057	488	15
80205	MS15795-819	5310-00-656-0114	476	25
80205	MS15795-820	5310-00-614-3505	35	8
80205	MS15795-841	5310-00-225-5328	79	14
		5310-00-225-5328	482	17
80205	MS15795-852	5310-01-304-8733	43B	12

CROSS REFERENCE INDEXES

PART NUMBER INDEX

CAGE	PART NUMBER	STOCK NUMBER	FIGURE NO	ITEM NO
		5310-01-304-8733	43B	30
80205	MS15795-908	5310-00-045-5207	69	32
80205	MS15795-918	5310-00-045-5218	70	6
		5310-00-045-5218	481	4
80205	MS16562-20	5315-00-814-3529	230	11
80205	MS16562-256	5315-00-753-3895	202	22
80205	MS16562-28	5315-00-616-4261	133	12
96906	MS16624-1062	5325-00-803-7305	99	25
		5325-00-803-7305	133	7
96906	MS16624-1066	5325-00-282-1830	205	29
96906	MS16633-1031	5325-00-682-1762	116	19
96906	MS16633-1050	5325-00-442-5845	155	7
		5325-00-442-5845	280	42
		5325-00-442-5845	281	42
		5325-00-442-5845	289	19
96906	MS16843-5	4030-00-237-8741	314	18
80205	MS16995-50	5305-00-988-7614	315	9
80205	MS16995-63	5305-00-225-7211	5	3
80205	MS16995-72	5305-00-992-6143	178	16
		5305-00-992-6143	436	11
80205	MS16995-77	5305-00-051-8605	149	9
		5305-00-051-8605	159	11
		5305-00-051-8605	161	4
		5305-00-051-8605	162	4
96906	MS16995-77	5305-00-051-8605	141	11
80205	MS16995-78	5305-00-226-7237	12	37
80205	MS16996-10	5305-00-052-6456	34	17
96906	MS17131-55	3110-00-056-9376	128	7
96906	MS17829-4F	5310-00-483-8791	321	18
		5310-00-483-8791	376	14
		5310-00-483-8791	382	6
		5310-00-483-8791	389	10
		5310-00-483-8791	397	5
96906	MS17986-C1013	5315-01-249-0555	437	2
96906	MS17986-C423	5315-00-376-9034	433	10
96906	MS17986-C840	5315-00-150-2793	276	3
80205	MS17986C1009	5315-01-473-1590	462	6
96906	MS19059-2410	3110-00-100-6162	314	38
96906	MS19061-20007	3110-00-900-2560	118	2
		3110-00-900-2560	120	11
96906	MS20002-12	5310-00-595-6612	39	9
96906	MS20002-20	5310-00-515-8776	453	14
96906	MS20392-3C67	5315-00-840-9653	243	11
96906	MS20392-4C69	5315-00-983-7402	268	8
96906	MS20392-4C77	5315-00-240-0251	243	32
96906	MS20392-4C95	5315-00-989-0534	244	11
96906	MS20392-6C17	5315-00-890-3461	390	11
96906	MS20426-AD6-8	5320-00-117-7288	289	10
80205	MS20426AD10-16	5320-00-117-6910	288	17

CROSS REFERENCE INDEXES

PART NUMBER INDEX

CAGE	PART NUMBER	STOCK NUMBER	FIGURE NO	ITEM NO
80205	MS20426AD6-12	5320-00-117-7291	213	4
80205	MS20426AD6-4	5320-00-526-2945	213	30
80205	MS20426AD6-7	5320-00-117-7287	224	16
80205	MS20426AD6-9	5320-00-117-7289	288	4
80205	MS20470AD6-10	5320-00-721-9062	197	22
		5320-00-721-9062	199	46
		5320-00-721-9062	212	17
		5320-00-721-9062	288	9
		5320-00-721-9062	289	20
80205	MS20470AD6-12	5320-00-117-6856	197	15
80205	MS20470AD6-7	5320-00-754-0992	198	5
		5320-00-754-0992	238	6
80205	MS20470AD6-8	5320-00-117-6853	197	15
		5320-00-117-6853	197	36
		5320-00-117-6853	199	52
		5320-00-117-6853	289	13
80205	MS20470B4-4	5320-00-119-6823	498	3
96906	MS20604AD6W4	5320-00-957-2507	282	12
96906	MS20604B4W1	5320-00-957-2500	357	2
96906	MS20659-103	5940-00-113-3143	90	5
		5940-00-113-3143	93	12
		5940-00-113-3143	95	5
		5940-00-113-3143	96	12
96906	MS20659-104	5940-00-107-1481	75	5
		5940-00-107-1481	76	6
		5940-00-107-1481	92	10
		5940-00-107-1481	96	6
96906	MS20659-105	5940-00-114-1300	95	9
		5940-00-114-1300	96	10
96906	MS20659-106	5940-00-113-9819	95	10
		5940-00-113-9819	96	7
96906	MS20659-108	5940-00-115-2674	41	2
		5940-00-115-2674	95	12
		5940-00-115-2674	96	13
96906	MS20659-109	5940-00-114-1317	91	7
96906	MS20659-110	5940-00-115-4992	91	2
		5940-00-115-4992	94	6
96906	MS20659-111	5940-00-115-2678	41	7
		5940-00-115-2678	474	16
96906	MS20659-118	5940-00-115-2684	480	35
96906	MS20659-124	5940-00-115-5023	480	13
96906	MS20659-129	5940-00-114-1314	41	5
		5940-00-114-1314	95	16
		5940-00-114-1314	96	16
96906	MS20659-135	5940-00-115-5001	480	21
96906	MS20659-141	5940-00-113-9825	75	4
		5940-00-113-9825	95	20
		5940-00-113-9825	96	15
96906	MS20659-142	5940-00-114-1315	76	12

CROSS REFERENCE INDEXES

PART NUMBER INDEX

CAGE	PART NUMBER	STOCK NUMBER	FIGURE NO	ITEM NO
96906	MS20659-143	5940-00-115-2676	91	5
		5940-00-115-2676	94	5
96906	MS20659-151	5940-00-115-2683	480	32
96906	MS20659-152	5940-00-115-2685	69	39
96906	MS20659-157	5940-00-115-5012	480	15
96906	MS20659-163	5940-00-113-3145	95	17
		5940-00-113-3145	96	9
96906	MS20659-165	5940-00-113-0954	93	13
96906	MS20659-166	5940-00-113-9821	367	7
96906	MS20668-4	1640-00-132-9181	275	9
		1640-00-132-9181	276	7
96906	MS20913-6S	4730-00-221-2140	363	12
80205	MS21042-08	5310-00-807-1466	273	14
		5310-00-807-1466	275	13
		5310-00-807-1466	276	9
80205	MS21042L4	5310-00-807-1475	279	14
80205	MS21042L5	5310-00-807-1476	279	18
80205	MS21042L6	5310-00-807-1477	279	26
96906	MS21044-C3	5310-00-208-9255	480	10
		5310-00-208-9255	482	11
96906	MS21044-N08	5310-00-811-3494	252	4
		5310-00-811-3494	379	3
96906	MS21044-N4	5310-00-877-5796	328	13
96906	MS21044-N5	5310-00-088-0553	392	4
80205	MS21044N3	5310-00-877-5797	368	36
		5310-00-877-5797	379	49
		5310-00-877-5797	388	3
		5310-00-877-5797	393	15
		5310-00-877-5797	396	11
96906	MS21045-04	5310-00-889-2543	55	10
96906	MS21045-3	5310-00-061-7326	365	22
96906	MS21045-6	5310-00-982-4908	128	55
		5310-00-982-4908	129	22
96906	MS21045-7	5310-00-274-9364	238	3
96906	MS21083N08	5310-00-941-6019	250	14
		5310-00-941-6019	378	10
		5310-00-941-6019	378	13
		5310-00-941-6019	389	1
96906	MS21245-8	5310-00-449-2376	167	26
		5310-00-449-2376	191	16
96906	MS21245-L10	5310-00-449-2381	35	7
96906	MS21245-L12	5310-00-419-0876	36	7
		5310-00-419-0876	38	7
		5310-00-419-0876	39	10
		5310-00-419-0876	476	9
96906	MS21266-2N	5325-00-074-3301	BULK	6
80205	MS21318-20	5305-00-253-5614	197	35
80205	MS21318-47	5305-00-253-5626	191	18
80205	MS21318-48	5305-00-253-5627	357	8

CROSS REFERENCE INDEXES

PART NUMBER INDEX

CAGE	PART NUMBER	STOCK NUMBER	FIGURE NO	ITEM NO
96906	MS21333-101	5340-00-088-6655	88	40
		5340-00-088-6655	93	27
		5340-00-088-6655	410	27
96906	MS21333-102	5340-00-984-8540	19	13
		5340-00-984-8540	88	11
		5340-00-984-8540	89	10
		5340-00-984-8540	96	26
		5340-00-984-8540	338	15
		5340-00-984-8540	339	24
		5340-00-984-8540	414	23
96906	MS21333-103	5340-00-854-6729	93	17
		5340-00-854-6729	96	23
		5340-00-854-6729	412	21
		5340-00-854-6729	425	17
		5340-00-854-6729	426	23
		5340-00-854-6729	427	23
96906	MS21333-104	5340-00-088-1254	75	33
		5340-00-088-1254	84	17
		5340-00-088-1254	88	15
		5340-00-088-1254	155	1
		5340-00-088-1254	416	26
		5340-00-088-1254	176A	18
96906	MS21333-105	5340-00-809-1494	44	17
		5340-00-809-1494	64	27
		5340-00-809-1494	75	29
		5340-00-809-1494	84	11
		5340-00-809-1494	88	19
		5340-00-809-1494	338	29
		5340-00-809-1494	339	25
		5340-00-809-1494	480	22
96906	MS21333-106	5340-00-984-8541	44	11
96906	MS21333-107	5340-00-809-1500	75	50
		5340-00-809-1500	77	22
96906	MS21333-109	5340-00-067-3868	135	2
		5340-00-067-3868	141	22
96906	MS21333-112	5340-00-057-3043	160	15
		5340-00-057-3043	162	11
		5340-00-057-3043	424	2
		5340-00-057-3043	426	26
96906	MS21333-113	5340-00-988-1162	80	14
96906	MS21333-114	5340-00-057-3052	69	41
		5340-00-057-3052	282	6
80205	MS21333-116	5340-00-764-7052	77	11
96906	MS21333-119	5340-00-050-9077	123	3
		5340-00-050-9077	135	6
		5340-00-050-9077	149	8
		5340-00-050-9077	414	12
96906	MS21333-120	5340-00-964-5267	75	45
		5340-00-964-5267	77	19

CROSS REFERENCE INDEXES

PART NUMBER INDEX

CAGE	PART NUMBER	STOCK NUMBER	FIGURE NO	ITEM NO
		5340-00-964-5267	487D	4
96906	MS21333-121	5340-00-954-6014	18	11
		5340-00-954-6014	89	8
		5340-00-954-6014	124	16
		5340-00-954-6014	125	16
		5340-00-954-6014	159	12
		5340-00-954-6014	160	3
		5340-00-954-6014	161	12
96906	MS21333-122	5340-00-833-8476	66	5
		5340-00-833-8476	79	21
		5340-00-833-8476	410	18
		5340-00-833-8476	412	15
96906	MS21333-123	5340-00-989-1771	77	3
		5340-00-989-1771	141	12
		5340-00-989-1771	338	13
		5340-00-989-1771	484	2
		5340-00-989-1771	487B	5
		5340-00-989-1771	487D	2
96906	MS21333-124	5340-00-854-6730	416	16
		5340-00-854-6730	428	16
96906	MS21333-125	5340-00-725-5280	75	38
		5340-00-725-5280	77	20
		5340-00-725-5280	177	12
		5340-00-725-5280	178	25
96906	MS21333-126	5340-00-053-8994	75	39
		5340-00-053-8994	472	4
		5340-00-053-8994	474	2
		5340-00-053-8994	480	24
96906	MS21333-128	5340-00-702-2848	41	14
		5340-00-702-2848	473	4
		5340-00-702-2848	474	2
		5340-00-702-2848	475	30
80205	MS21333-129	5340-00-151-9651	12	18
		5340-00-151-9651	30	6
		5340-00-151-9651	41	14
96906	MS21333-19	5340-00-988-3186	365	21
96906	MS21333-36	5340-00-286-2494	327	46
96906	MS21333-41	5340-00-282-7537	246	22
		5340-00-282-7537	366	28
		5340-00-282-7537	386	10
96906	MS21333-42	5340-00-282-7517	327	25
96906	MS21333-45	5340-00-881-5303	11	7
96906	MS21333-62	5340-00-282-7509	84	15
96906	MS21333-65	5340-00-905-0790	485	6
96906	MS21333-66	5340-00-990-7610	332	24
96906	MS21333-67	5340-00-079-7837	21	16
		5340-00-079-7837	398	11
		5340-00-079-7837	400	9
		5340-00-079-7837	425	18

CROSS REFERENCE INDEXES

PART NUMBER INDEX

CAGE	PART NUMBER	STOCK NUMBER	FIGURE NO	ITEM NO
96906	MS21333-68	5340-00-843-7825	65	20
		5340-00-843-7825	88	30
		5340-00-843-7825	89	14
		5340-00-843-7825	95	28
		5340-00-843-7825	96	20
		5340-00-843-7825	327	28
96906	MS21333-69	5340-00-764-7051	83	19
		5340-00-764-7051	85	28
		5340-00-764-7051	88	24
		5340-00-764-7051	92	21
		5340-00-764-7051	95	46
		5340-00-764-7051	335	4
		5340-00-764-7051	396	12
		5340-00-764-7051	468	11
96906	MS21333-70	5340-00-689-9514	84	33
		5340-00-689-9514	85	4
		5340-00-689-9514	88	2
		5340-00-689-9514	91	14
		5340-00-689-9514	92	20
		5340-00-689-9514	95	24
		5340-00-689-9514	488	7
96906	MS21333-71	5340-00-057-2904	75	25
		5340-00-057-2904	77	6
		5340-00-057-2904	79	22
		5340-00-057-2904	83	22
		5340-00-057-2904	85	29
		5340-00-057-2904	88	23
		5340-00-057-2904	92	15
		5340-00-057-2904	93	19
		5340-00-057-2904	95	26
		5340-00-057-2904	96	24
		5340-00-057-2904	282	3
		5340-00-057-2904	338	8
		5340-00-057-2904	339	2
		5340-00-057-2904	366	7
		5340-00-057-2904	410	24
		5340-00-057-2904	412	18
		5340-00-057-2904	414	14
96906	MS21333-72	5340-00-091-3790	55	16
		5340-00-091-3790	75	46
		5340-00-091-3790	79	17
		5340-00-091-3790	83	16
		5340-00-091-3790	85	26
		5340-00-091-3790	88	6
		5340-00-091-3790	93	26
		5340-00-091-3790	96	25
		5340-00-091-3790	366	5
		5340-00-091-3790	424	4
		5340-00-091-3790	426	25

CROSS REFERENCE INDEXES

PART NUMBER INDEX

CAGE	PART NUMBER	STOCK NUMBER	FIGURE NO	ITEM NO
		5340-00-091-3790	427	25
		5340-00-091-3790	445	9
		5340-00-091-3790	488	13
96906	MS21333-73	5340-00-057-2906	88	32
		5340-00-057-2906	92	12
		5340-00-057-2906	95	35
		5340-00-057-2906	410	19
		5340-00-057-2906	414	17
		5340-00-057-2906	416	18
		5340-00-057-2906	428	17
		5340-00-057-2906	453	4
96906	MS21333-74	5340-00-989-9222	83	9
		5340-00-989-9222	84	9
		5340-00-989-9222	88	20
		5340-00-989-9222	95	33
		5340-00-989-9222	282	5
		5340-00-989-9222	385	2
		5340-00-989-9222	414	15
		5340-00-989-9222	445	5
96906	MS21333-75	5340-00-050-2740	59	9
		5340-00-050-2740	83	21
		5340-00-050-2740	84	12
		5340-00-050-2740	88	18
		5340-00-050-2740	91	11
		5340-00-050-2740	94	9
		5340-00-050-2740	96	27
		5340-00-050-2740	282	5
		5340-00-050-2740	338	16
		5340-00-050-2740	339	12
		5340-00-050-2740	410	22
		5340-00-050-2740	412	16
		5340-00-050-2740	414	20
		5340-00-050-2740	416	23
		5340-00-050-2740	416	29
		5340-00-050-2740	424	3
		5340-00-050-2740	428	22
96906	MS21333-76	5340-00-724-7038	59	9
		5340-00-724-7038	83	18
		5340-00-724-7038	84	3
		5340-00-724-7038	88	21
		5340-00-724-7038	91	9
		5340-00-724-7038	95	44
		5340-00-724-7038	410	21
		5340-00-724-7038	414	18
		5340-00-724-7038	416	21
		5340-00-724-7038	428	20
96906	MS21333-77	5340-00-922-6300	58	11
		5340-00-922-6300	59	11
		5340-00-922-6300	84	2

CROSS REFERENCE INDEXES

PART NUMBER INDEX

CAGE	PART NUMBER	STOCK NUMBER	FIGURE NO	ITEM NO
		5340-00-922-6300	88	22
		5340-00-922-6300	93	22
		5340-00-922-6300	95	31
		5340-00-922-6300	96	28
		5340-00-922-6300	306	9
		5340-00-922-6300	310	4
		5340-00-922-6300	338	28
		5340-00-922-6300	379	2
		5340-00-922-6300	410	20
		5340-00-922-6300	414	19
		5340-00-922-6300	416	19
		5340-00-922-6300	428	18
96906	MS21333-78	5340-00-958-8457	282	17
		5340-00-958-8457	303	3
		5340-00-958-8457	338	4
		5340-00-958-8457	416	22
		5340-00-958-8457	428	21
96906	MS21333-86	5340-00-193-4111	370	18
96906	MS21333-96	5340-00-088-1255	485	7
96906	MS21333-98	5340-00-809-1490	75	23
		5340-00-809-1490	88	37
		5340-00-809-1490	400	11
96906	MS21333-99	5340-00-993-6207	77	14
		5340-00-993-6207	89	15
		5340-00-993-6207	334	15
		5340-00-993-6207	366	20
		5340-00-993-6207	368	42
		5340-00-993-6207	379	46
		5340-00-993-6207	386	6
96906	MS21334-25	5340-01-049-9564	13	23
		5340-01-049-9564	14	10
96906	MS21334-28	5340-00-926-5449	313	20
96906	MS21334-31	5340-00-929-1794	477	7
96906	MS21334-34	5340-00-731-9611	480	7
96906	MS24521-7	4730-00-100-3918	379	44
96906	MS24523-21	5930-00-681-4727	396	10
96906	MS24539	6620-00-993-5546	66	10
80205	MS24625-42	5305-00-045-7603	224	8
		5305-00-045-7603	268	26
80205	MS24629-46	5305-00-855-0957	225	9
		5305-00-855-0957	277	40
		5305-00-855-0957	294	2
80205	MS24629-57	5305-00-052-6921	28	2
80205	MS24629-73	5305-00-204-4850	327	15
80205	MS24630-13	5305-00-052-8881	469	4
80205	MS24630-66	5305-01-109-0587	323	6
96906	MS24659-23G	5930-00-856-1654	482	2
80205	MS24665-132	5315-00-839-2325	238	18
		5315-00-839-2325	250	10

CROSS REFERENCE INDEXES

PART NUMBER INDEX

CAGE	PART NUMBER	STOCK NUMBER	FIGURE NO	ITEM NO
80205	MS24665-134	5315-00-839-5820	202	18
		5315-00-839-5820	243	9
		5315-00-839-5820	293	10
80205	MS24665-208	5315-00-829-1480	368	8
80205	MS24665-281	5315-00-839-2326	274	5
		5315-00-839-2326	276	31
80205	MS24665-283	5315-00-842-3044	155	19
		5315-00-842-3044	243	23
		5315-00-842-3044	244	9
		5315-00-842-3044	390	14
80205	MS24665-298	5315-00-234-1861	268	9
80205	MS24665-319	5315-01-267-7570	403	8
80205	MS24665-351	5315-00-839-5821	134	1
80205	MS24665-353	5315-00-839-5822	443	17
80205	MS24665-355	5315-00-012-0123	152	13
		5315-00-012-0123	188	13
		5315-00-012-0123	195	12
96906	MS24665-355	5315-00-012-0123	183	4
		5315-00-012-0123	185	15
		5315-00-012-0123	187	19
80205	MS24665-357	5315-00-298-1481	437	11
80205	MS24665-377	5315-00-285-7161	365	8
		5315-00-285-7161	368	12
80205	MS24665-423	5315-00-013-7228	156	14
80205	MS24665-513	5315-00-239-8032	186	8
		5315-00-239-8032	188	19
		5315-00-239-8032	188	35
80205	MS24665-628	5315-00-846-0126	191	10
		5315-00-846-0126	442	13
		5315-00-846-0126	453	15
96906	MS24665-640	5315-00-243-1169	191	21
96906	MS24667-52Z	5305-01-393-7801	210	11
96906	MS24667-77	5305-00-052-2232	199	18
		5305-00-052-2232	251	19
		5305-00-052-2232	270	11
		5305-00-052-2232	296	1
96906	MS24693-S350	5305-00-901-7250	390	7
96906	MS24694-S98	5305-00-043-2682	279	23
81343	MS25036-112	5940-00-143-4794	72	20
		5940-00-143-4794	73	6
96906	MS25036-133	5940-00-115-5006	44	16
		5940-00-115-5006	69	14
		5940-00-115-5006	69	20
		5940-00-115-5006	69	25
		5940-00-115-5006	72	4
		5940-00-115-5006	72	19
		5940-00-115-5006	73	18
		5940-00-115-5006	73	22
		5940-00-115-5006	474	16

CROSS REFERENCE INDEXES

PART NUMBER INDEX

CAGE	PART NUMBER	STOCK NUMBER	FIGURE NO	ITEM NO
		5940-00-115-5006	480	17
96906	MS25043-32DA	5935-01-223-9420	74	12
96906	MS25171-1S	5975-00-553-6995	380	13
96906	MS25231-1873	6240-00-419-3185	49	2
96906	MS25306-222	5930-00-728-4328	55	19
		5930-00-728-4328	56	16
96906	MS25307-312	5930-00-978-8805	55	17
		5930-00-978-8805	56	12
96906	MS27040-13	5310-00-982-4939	313	23
96906	MS27130-20	5310-01-009-9785	337	13
96906	MS27130-29	5310-00-074-2351	292	1
96906	MS27130-31	5310-01-093-3493	492	17
96906	MS27130-A26	5310-00-141-3062	256	8
		5310-00-141-3062	257	8
		5310-00-141-3062	259	11
		5310-00-141-3062	262	7
96906	MS27130-A27	5310-00-003-6779	260	13
96906	MS27130-A28	5310-01-395-3549	213	22
		5310-01-395-3549	262	16
96906	MS27130-A31	5310-01-088-7962	254	14
		5310-01-088-7962	492	17
96906	MS27130-A37	5310-00-126-5168	228	11
96906	MS27130-A43	5310-01-046-5382	340	9
96906	MS27130-A50	5310-01-101-6046	340	8
96906	MS27130-CR27	5310-01-046-5371	487	6
96906	MS27130-CR31	5310-01-283-8482	383	7
96906	MS27130-S25	5310-00-990-1361	487	5
		5310-00-990-1361	487	6
96906	MS27130-S26	5310-00-269-3466	225	13
96906	MS27130-S32	5310-00-006-8291	225	44
96906	MS27130-S37	5310-00-460-4490	218	6
		5310-00-460-4490	257	5
96906	MS27130-S43	5310-00-080-2411	432	5
		5310-00-080-2411	487	13
96906	MS27130-S44	5310-01-080-5746	487	13
96906	MS27130-S71	5310-01-085-1208	377	11
96906	MS27130A32	5310-00-401-5321	237	13
		5310-00-401-5321	258	6
		5310-00-401-5321	262	4
96906	MS27142-2	5935-00-462-6603	65	4
		5935-00-462-6603	65	27
		5935-00-462-6603	75	11
		5935-00-462-6603	76	14
		5935-00-462-6603	80	2
		5935-00-462-6603	81	7
		5935-00-462-6603	83	20
		5935-00-462-6603	84	32
		5935-00-462-6603	85	15
		5935-00-462-6603	86	8

CROSS REFERENCE INDEXES

PART NUMBER INDEX

CAGE	PART NUMBER	STOCK NUMBER	FIGURE NO	ITEM NO
		5935-00-462-6603	87	2
		5935-00-462-6603	87	4
		5935-00-462-6603	89	5
		5935-00-462-6603	90	6
		5935-00-462-6603	92	4
		5935-00-462-6603	93	9
		5935-00-462-6603	445	7
96906	MS27142-3	5935-00-115-2306	65	17
		5935-00-115-2306	81	13
96906	MS27144-1	5935-00-167-7775	65	5
		5935-00-167-7775	65	26
		5935-00-167-7775	75	10
		5935-00-167-7775	76	4
		5935-00-167-7775	80	5
		5935-00-167-7775	81	3
		5935-00-167-7775	81	15
		5935-00-167-7775	83	3
		5935-00-167-7775	84	31
		5935-00-167-7775	85	1
		5935-00-167-7775	86	1
		5935-00-167-7775	87	1
		5935-00-167-7775	87	5
		5935-00-167-7775	89	2
		5935-00-167-7775	90	2
		5935-00-167-7775	92	6
		5935-00-167-7775	93	8
		5935-00-167-7775	95	2
		5935-00-167-7775	96	5
		5935-00-167-7775	367	8
		5935-00-167-7775	445	8
96906	MS27144-2	5935-00-115-2307	65	13
		5935-00-115-2307	81	9
		5935-00-115-2307	483	5
96906	MS27144-3	5935-00-184-6707	75	9
		5935-00-184-6707	76	8
		5935-00-184-6707	81	5
		5935-00-184-6707	85	20
		5935-00-184-6707	86	13
96906	MS27147-1	5935-00-900-6281	366	32
		5935-00-900-6281	386	11
		5935-00-900-6281	469	11
		5935-00-900-6281	483	3
96906	MS27183-10	5310-00-809-4058	12	1
		5310-00-809-4058	16	22
		5310-00-809-4058	21	18
		5310-00-809-4058	50	14
		5310-00-809-4058	51	2
		5310-00-809-4058	62	28
		5310-00-809-4058	64	14

CROSS REFERENCE INDEXES

PART NUMBER INDEX

CAGE	PART NUMBER	STOCK NUMBER	FIGURE NO	ITEM NO
		5310-00-809-4058	64	21
		5310-00-809-4058	69	4
		5310-00-809-4058	70	11
		5310-00-809-4058	84	19
		5310-00-809-4058	84	21
		5310-00-809-4058	141	15
		5310-00-809-4058	155	5
		5310-00-809-4058	169	11
		5310-00-809-4058	177	11
		5310-00-809-4058	178	6
		5310-00-809-4058	197	29
		5310-00-809-4058	198	8
		5310-00-809-4058	198	14
		5310-00-809-4058	203	12
		5310-00-809-4058	204	12
		5310-00-809-4058	206	25
		5310-00-809-4058	207	7
		5310-00-809-4058	211	27
		5310-00-809-4058	212	26
		5310-00-809-4058	214	5
		5310-00-809-4058	225	42
		5310-00-809-4058	227	30
		5310-00-809-4058	238	19
		5310-00-809-4058	241	13
		5310-00-809-4058	243	7
		5310-00-809-4058	246	23
		5310-00-809-4058	248	26
		5310-00-809-4058	249	1
		5310-00-809-4058	250	13
		5310-00-809-4058	250	18
		5310-00-809-4058	267	2
		5310-00-809-4058	267	4
		5310-00-809-4058	269	31
		5310-00-809-4058	272	3
		5310-00-809-4058	280	49
		5310-00-809-4058	281	49
		5310-00-809-4058	287	24
		5310-00-809-4058	288	21
		5310-00-809-4058	288	29
		5310-00-809-4058	292	10
		5310-00-809-4058	293	30
		5310-00-809-4058	294	5
		5310-00-809-4058	304	8
		5310-00-809-4058	312	2
		5310-00-809-4058	321	12
		5310-00-809-4058	323	8
		5310-00-809-4058	325	14
		5310-00-809-4058	326	11
		5310-00-809-4058	327	44

CROSS REFERENCE INDEXES

PART NUMBER INDEX

CAGE	PART NUMBER	STOCK NUMBER	FIGURE NO	ITEM NO
		5310-00-809-4058	328	14
		5310-00-809-4058	331	26
		5310-00-809-4058	343	16
		5310-00-809-4058	365	16
		5310-00-809-4058	365	25
		5310-00-809-4058	366	16
		5310-00-809-4058	368	22
		5310-00-809-4058	375	29
		5310-00-809-4058	379	14
		5310-00-809-4058	382	5
		5310-00-809-4058	384	8
		5310-00-809-4058	388	9
		5310-00-809-4058	389	9
		5310-00-809-4058	397	9
		5310-00-809-4058	429	12
		5310-00-809-4058	430	15
		5310-00-809-4058	475	8
		5310-00-809-4058	492	8
		5310-00-809-4058	497	4
96906	MS27183-11	5310-00-809-3078	4	31
		5310-00-809-3078	71	11
		5310-00-809-3078	180	20
		5310-00-809-3078	203	2
		5310-00-809-3078	206	3
		5310-00-809-3078	233	2
		5310-00-809-3078	243	16
		5310-00-809-3078	247	6
		5310-00-809-3078	248	19
		5310-00-809-3078	266	15
		5310-00-809-3078	375	21
		5310-00-809-3078	430	35
		5310-00-809-3078	446	13
96906	MS27183-12	5310-00-081-4219	5	4
		5310-00-081-4219	74	2
		5310-00-081-4219	142	28
		5310-00-081-4219	143	37
		5310-00-081-4219	150	28
		5310-00-081-4219	151	37
		5310-00-081-4219	154	7
		5310-00-081-4219	160	14
		5310-00-081-4219	162	13
		5310-00-081-4219	178	14
		5310-00-081-4219	180	11
		5310-00-081-4219	189	4
		5310-00-081-4219	190	2
		5310-00-081-4219	198	20
		5310-00-081-4219	199	2
		5310-00-081-4219	204	7
		5310-00-081-4219	209	3

CROSS REFERENCE INDEXES

PART NUMBER INDEX

CAGE	PART NUMBER	STOCK NUMBER	FIGURE NO	ITEM NO
		5310-00-081-4219	211	14
		5310-00-081-4219	212	12
		5310-00-081-4219	225	30
		5310-00-081-4219	226	15
		5310-00-081-4219	230	4
		5310-00-081-4219	235	7
		5310-00-081-4219	236	7
		5310-00-081-4219	243	24
		5310-00-081-4219	244	10
		5310-00-081-4219	273	8
		5310-00-081-4219	273	17
		5310-00-081-4219	277	33
		5310-00-081-4219	280	46
		5310-00-081-4219	281	46
		5310-00-081-4219	288	19
		5310-00-081-4219	321	19
		5310-00-081-4219	321	31
		5310-00-081-4219	324	8
		5310-00-081-4219	325	27
		5310-00-081-4219	329	6
		5310-00-081-4219	333	23
		5310-00-081-4219	363	15
		5310-00-081-4219	376	15
		5310-00-081-4219	377	14
		5310-00-081-4219	378	29
		5310-00-081-4219	402	7
		5310-00-081-4219	429	6
		5310-00-081-4219	432	4
		5310-00-081-4219	433	8
		5310-00-081-4219	436	9
		5310-00-081-4219	473	2
		5310-00-081-4219	474	6
		5310-00-081-4219	480	5
		5310-00-081-4219	487B	4
		5310-00-081-4219	487D	9
96906	MS27183-13	5310-00-087-7493	37	4
		5310-00-087-7493	52	25
		5310-00-087-7493	60	2
		5310-00-087-7493	61	2
		5310-00-087-7493	103	16
		5310-00-087-7493	153	16
		5310-00-087-7493	159	3
		5310-00-087-7493	160	10
		5310-00-087-7493	205	2
		5310-00-087-7493	206	1
		5310-00-087-7493	206	9
		5310-00-087-7493	206	29
		5310-00-087-7493	238	22
		5310-00-087-7493	240	7

CROSS REFERENCE INDEXES

PART NUMBER INDEX

CAGE	PART NUMBER	STOCK NUMBER	FIGURE NO	ITEM NO
		5310-00-087-7493	268	18
		5310-00-087-7493	270	14
		5310-00-087-7493	285	5
		5310-00-087-7493	286	10
		5310-00-087-7493	288	7
		5310-00-087-7493	292	17
		5310-00-087-7493	293	5
		5310-00-087-7493	398	23
		5310-00-087-7493	429	17
		5310-00-087-7493	436	8
		5310-00-087-7493	490	2
96906	MS27183-14	5310-00-080-6004	2	3
		5310-00-080-6004	23	2
		5310-00-080-6004	24	7
		5310-00-080-6004	36	17
		5310-00-080-6004	66	6
		5310-00-080-6004	79	20
		5310-00-080-6004	128	54
		5310-00-080-6004	129	23
		5310-00-080-6004	134	2
		5310-00-080-6004	142	14
		5310-00-080-6004	143	14
		5310-00-080-6004	150	14
		5310-00-080-6004	151	14
		5310-00-080-6004	163	6
		5310-00-080-6004	164	2
		5310-00-080-6004	175	9
		5310-00-080-6004	187	9
		5310-00-080-6004	189	1
		5310-00-080-6004	190	4
		5310-00-080-6004	245	22
		5310-00-080-6004	266	25
		5310-00-080-6004	272	25
		5310-00-080-6004	273	2
		5310-00-080-6004	277	2
		5310-00-080-6004	280	25
		5310-00-080-6004	281	25
		5310-00-080-6004	328	18
		5310-00-080-6004	329	13
		5310-00-080-6004	332	34
		5310-00-080-6004	392	9
		5310-00-080-6004	431	3
		5310-00-080-6004	438	8
		5310-00-080-6004	440	6
		5310-00-080-6004	441	8
		5310-00-080-6004	461	9
		5310-00-080-6004	471	10
96906	MS27183-15	5310-00-809-4061	1	3
		5310-00-809-4061	8	1

CROSS REFERENCE INDEXES

PART NUMBER INDEX

CAGE	PART NUMBER	STOCK NUMBER	FIGURE NO	ITEM NO
		5310-00-809-4061	37	11
		5310-00-809-4061	170	22
96906	MS27183-16	5310-00-809-4085	36	2
		5310-00-809-4085	38	2
		5310-00-809-4085	136	4
		5310-00-809-4085	144	15
		5310-00-809-4085	169	15
		5310-00-809-4085	171	2
		5310-00-809-4085	202	33
		5310-00-809-4085	234	9
		5310-00-809-4085	239	6
		5310-00-809-4085	271	10
		5310-00-809-4085	271	25
		5310-00-809-4085	313	22
		5310-00-809-4085	398	4
		5310-00-809-4085	402	9
		5310-00-809-4085	438	19
		5310-00-809-4085	475	11
96906	MS27183-17	5310-00-809-5997	209	13
		5310-00-809-5997	292	19
		5310-00-809-5997	429	37
96906	MS27183-18	5310-00-809-5998	142	17
		5310-00-809-5998	143	17
		5310-00-809-5998	150	17
		5310-00-809-5998	151	17
		5310-00-809-5998	165	9
		5310-00-809-5998	166	6
		5310-00-809-5998	293	9
		5310-00-809-5998	295	7
		5310-00-809-5998	295	13
		5310-00-809-5998	363	17
		5310-00-809-5998	390	3
		5310-00-809-5998	397	15
		5310-00-809-5998	455	3
96906	MS27183-19	5310-00-809-3079	455	5
96906	MS27183-20	5310-00-068-5285	127	12
		5310-00-068-5285	165	5
		5310-00-068-5285	166	4
		5310-00-068-5285	179	9
		5310-00-068-5285	180	10
96906	MS27183-21	5310-00-823-8803	193	5
		5310-00-823-8803	199	41
		5310-00-823-8803	437	4
96906	MS27183-23	5310-00-809-8533	178	22
		5310-00-809-8533	385	10
96906	MS27183-4	5310-00-950-1310	274	21
96906	MS27183-42	5310-00-014-5850	63	6
		5310-00-014-5850	93	25
		5310-00-014-5850	95	39

CROSS REFERENCE INDEXES

PART NUMBER INDEX

CAGE	PART NUMBER	STOCK NUMBER	FIGURE NO	ITEM NO
		5310-00-014-5850	96	29
		5310-00-014-5850	169	20
		5310-00-014-5850	199	33
		5310-00-014-5850	199	57
		5310-00-014-5850	202	42
		5310-00-014-5850	203	31
		5310-00-014-5850	205	39
		5310-00-014-5850	206	15
		5310-00-014-5850	213	15
		5310-00-014-5850	214	11
		5310-00-014-5850	222	11
		5310-00-014-5850	227	49
		5310-00-014-5850	232	2
		5310-00-014-5850	241	8
		5310-00-014-5850	243	2
		5310-00-014-5850	244	18
		5310-00-014-5850	246	8
		5310-00-014-5850	246	13
		5310-00-014-5850	247	12
		5310-00-014-5850	248	4
		5310-00-014-5850	249	41
		5310-00-014-5850	268	25
		5310-00-014-5850	272	15
		5310-00-014-5850	293	12
		5310-00-014-5850	299	2
		5310-00-014-5850	303	10
		5310-00-014-5850	331	22
		5310-00-014-5850	333	15
		5310-00-014-5850	337	17
		5310-00-014-5850	339	27
		5310-00-014-5850	347	4
		5310-00-014-5850	368	26
		5310-00-014-5850	374	14
		5310-00-014-5850	411	7
		5310-00-014-5850	429	4
		5310-00-014-5850	430	8
		5310-00-014-5850	430	40
		5310-00-014-5850	446	10
		5310-00-014-5850	447	8
		5310-00-014-5850	448	7
		5310-00-014-5850	449	8
		5310-00-014-5850	450	2
		5310-00-014-5850	480	9
96906	MS27183-57	5310-01-280-5796	379	25
96906	MS27183-8	5310-00-809-8546	46	10
		5310-00-809-8546	446	8
		5310-00-809-8546	447	9
		5310-00-809-8546	449	3
96906	MS27183-9	5310-00-823-8804	5	6

CROSS REFERENCE INDEXES

PART NUMBER INDEX

CAGE	PART NUMBER	STOCK NUMBER	FIGURE NO	ITEM NO
		5310-00-823-8804	15	21
		5310-00-823-8804	18	3
		5310-00-823-8804	21	2
		5310-00-823-8804	21	28
		5310-00-823-8804	253	2
		5310-00-823-8804	494	4
		5310-00-823-8804	495	12
		5310-00-823-8804	496	7
		5310-00-823-8804	66A	4
96906	MS27407-4	5930-00-445-9274	55	6
		5930-00-445-9274	56	18
96906	MS28775-110	5331-00-585-6663	21	7
81343	MS28775-222	5331-00-297-9990	72	24
81343	MS28775-223	5331-00-171-6649	163	11
96906	MS3108R18-11S	5935-00-806-4183	93	11
96906	MS3217-2075	5325-01-388-2363	456	10
96906	MS3367-1-0	5975-00-984-6582	64	28
		5975-00-984-6582	81	11
		5975-00-984-6582	160	2
		5975-00-984-6582	469	2
		5975-00-984-6582	487B	2
81343	MS3367-1-9	5975-00-074-2072	345	7
96906	MS3367-1-9	5975-00-074-2072	12	9
		5975-00-074-2072	98	8
		5975-00-074-2072	485	8
96906	MS3367-2-0	5975-00-899-4606	282	10
96906	MS3367-2-9	5975-00-156-3253	488	5
96906	MS3367-3-0	5975-00-985-6630	75	21
		5975-00-985-6630	83	38
		5975-00-985-6630	85	31
		5975-00-985-6630	89	12
		5975-00-985-6630	94	10
		5975-00-985-6630	95	27
		5975-00-985-6630	96	32
		5975-00-985-6630	178	21
		5975-00-985-6630	335	15
		5975-00-985-6630	336	12
		5975-00-985-6630	338	18
		5975-00-985-6630	436	3
		5975-00-985-6630	457	15
		5975-00-985-6630	483	2
		5975-00-985-6630	484	1
96906	MS3367-3-9	5975-00-451-5001	5	8
		5975-00-451-5001	435	8
96906	MS3367-4-0	5975-00-903-2284	99	3
96906	MS3367-4-2	5975-00-903-2288	98	6
96906	MS3367-5-0	5975-00-133-8687	51	14
		5975-00-133-8687	386	3
		5975-00-133-8687	388	11

CROSS REFERENCE INDEXES

PART NUMBER INDEX

CAGE	PART NUMBER	STOCK NUMBER	FIGURE NO	ITEM NO
96906	MS3367-5-9	5975-00-111-3208	492	6
96906	MS3367-7	5975-01-205-5379	313	7
		5975-01-205-5379	333	32
		5975-01-205-5379	339	13
		5975-01-205-5379	410	28
		5975-01-205-5379	443	6
		5975-01-205-5379	485	9
96906	MS3367-7-0	5975-01-034-5871	98	7
		5975-01-034-5871	332	8
		5975-01-034-5871	369	2
		5975-01-034-5871	371	3
		5975-01-034-5871	412	22
		5975-01-034-5871	414	24
		5975-01-034-5871	416	27
		5975-01-034-5871	468	1
		5975-01-034-5871	470	4
		5975-01-034-5871	472	6
		5975-01-034-5871	473	7
		5975-01-034-5871	474	1
		5975-01-034-5871	475	3
		5975-01-034-5871	479	4
		5975-01-034-5871	480	1
		5975-01-034-5871	492	14
96906	MS3367-7-9	5975-00-570-9598	18	9
		5975-00-570-9598	41	15
		5975-00-570-9598	77	28
		5975-00-570-9598	379	7
		5975-00-570-9598	381	2
96906	MS3456W12-5S	5935-01-147-0148	95	21
		5935-01-147-0148	96	2
96906	MS3456W18-11S	5935-01-035-5139	367	9
96906	MS3456W24-11S	5935-01-173-7654	75	18
96906	MS35058-22	5930-00-655-1514	367	5
96906	MS35059-21	5930-00-615-9376	52	30
96906	MS35059-31	5930-00-615-7897	367	6
80205	MS35190-272	5305-00-088-8332	374	2
		5305-00-088-8332	429	10
		5305-00-088-8332	430	6
		5305-00-088-8332	430	20
		5305-00-088-8332	430	33
96906	MS35190-273	5305-00-958-5471	249	17
80205	MS35190-289	5305-00-958-5246	247	3
		5305-00-958-5246	271	15
		5305-00-958-5246	338	19
80205	MS35190-290	5305-00-954-3937	243	29
80205	MS35190-305	5305-00-958-5469	225	46
		5305-00-958-5469	226	31
80205	MS35190-306	5305-00-958-5253	225	46
		5305-00-958-5253	226	25

CROSS REFERENCE INDEXES

PART NUMBER INDEX

CAGE	PART NUMBER	STOCK NUMBER	FIGURE NO	ITEM NO
		5305-00-958-5253	226	31
80205	MS35190-307	5305-00-958-5254	226	25
		5305-00-958-5254	226	31
80205	MS35190-324	5305-00-958-5262	383	5
96906	MS35191-272	5305-00-984-7363	412	23
96906	MS35191-273	5305-00-984-7341	377	5
		5305-00-984-7341	447	7
		5305-00-984-7341	448	10
		5305-00-984-7341	449	7
		5305-00-984-7341	450	4
96906	MS35191-274	5305-00-984-7342	251	17
		5305-00-984-7342	251	42
		5305-00-984-7342	252	20
		5305-00-984-7342	446	19
		5305-00-984-7342	448	1
96906	MS35191-276	5305-00-984-7343	323	14
		5305-00-984-7343	429	15
		5305-00-984-7343	449	1
96906	MS35191-277	5305-00-957-2635	447	6
96906	MS35191-278	5305-00-984-7352	446	6
96906	MS35191-292	5305-00-988-9106	248	10
96906	MS35191-324	5305-00-959-2704	382	8
96906	MS35191-326	5305-00-824-2004	382	13
96906	MS35191-348	5305-01-315-9683	397	4
80205	MS35206-219	5305-00-984-4976	55	3
80205	MS35206-226	5305-00-984-4983	55	2
80205	MS35206-228	5305-00-984-4988	213	19
80205	MS35206-231	5305-00-889-3001	57	1
96906	MS35206-231	5305-00-889-3001	43	39
80205	MS35206-232	5305-00-984-4992	79	13
96906	MS35206-242	5305-00-889-3002	45	51
80205	MS35206-243	5305-00-984-6191	47	7
		5305-00-984-6191	354	11
80205	MS35206-244	5305-00-984-6192	72	21
		5305-00-984-6192	73	9
80205	MS35206-245	5305-00-984-6193	84	23
		5305-00-984-6193	280	36
		5305-00-984-6193	281	36
		5305-00-984-6193	300	12
		5305-00-984-6193	453	5
80205	MS35206-246	5305-00-984-6194	52	21
		5305-00-984-6194	59	24
		5305-00-984-6194	273	11
		5305-00-984-6194	379	1
96906	MS35206-247	5305-00-984-6195	48	4
		5305-00-984-6195	275	7
		5305-00-984-6195	276	5
		5305-00-984-6195	282	14
		5305-00-984-6195	337	6

CROSS REFERENCE INDEXES

PART NUMBER INDEX

CAGE	PART NUMBER	STOCK NUMBER	FIGURE NO	ITEM NO
		5305-00-984-6195	343	10
		5305-00-984-6195	378	9
		5305-00-984-6195	378	25
		5305-00-984-6195	380	3
80063	MS35206-248	5305-00-984-6196	281	10
80205	MS35206-248	5305-00-984-6196	280	10
96906	MS35206-249	5305-00-984-6197	50	9
96906	MS35206-251	5305-00-984-6199	213	33
		5305-00-984-6199	214	26
96906	MS35206-263	5305-00-984-6210	213	20
		5305-00-984-6210	214	17
96906	MS35206-264	5305-00-984-6211	63	7
96906	MS35206-265	5305-00-984-6212	35	13
		5305-00-984-6212	88	41
		5305-00-984-6212	202	3
		5305-00-984-6212	284	13
		5305-00-984-6212	293	11
		5305-00-984-6212	439	6
96906	MS35206-266	5305-00-984-6213	203	32
		5305-00-984-6213	222	12
		5305-00-984-6213	347	2
96906	MS35206-267	5305-00-984-6214	272	19
		5305-00-984-6214	281	16
96906	MS35206-280	5305-00-988-1724	97	2
		5305-00-988-1724	237	7
		5305-00-988-1724	330	3
96906	MS35206-281	5305-00-988-1725	49	7
		5305-00-988-1725	51	1
		5305-00-988-1725	59	25
		5305-00-988-1725	75	37
		5305-00-988-1725	83	29
		5305-00-988-1725	84	18
		5305-00-988-1725	88	36
		5305-00-988-1725	213	6
		5305-00-988-1725	214	2
		5305-00-988-1725	267	1
		5305-00-988-1725	280	14
		5305-00-988-1725	281	14
		5305-00-988-1725	313	5
		5305-00-988-1725	316	15
		5305-00-988-1725	320	14
		5305-00-988-1725	320	26
		5305-00-988-1725	321	28
		5305-00-988-1725	378	20
96906	MS35206-283	5305-00-988-1727	198	18
		5305-00-988-1727	213	8
		5305-00-988-1727	254	21
		5305-00-988-1727	376	17
96906	MS35206-284	5305-00-988-1170	267	17

CROSS REFERENCE INDEXES

PART NUMBER INDEX

CAGE	PART NUMBER	STOCK NUMBER	FIGURE NO	ITEM NO
96906	MS35206-285	5305-00-988-1171	237	12
96906	MS35206-295	5305-00-984-5675	277	34
96906	MS35206-298	5305-00-984-5678	233	1
96906	MS35206-329	5305-00-150-3408	56	21
96906	MS35206-345	5305-00-482-6825	254	29
		5305-00-482-6825	281	7
96906	MS35207-242	5305-00-958-4357	72	13
96906	MS35207-261	5305-00-990-6444	43	36
		5305-00-990-6444	45	30
		5305-00-990-6444	45	47
		5305-00-990-6444	52	27
		5305-00-990-6444	396	6
		5305-00-990-6444	485	26
96906	MS35207-262	5305-00-989-6265	39	32
		5305-00-989-6265	393	11
96906	MS35207-263	5305-00-989-7434	45	43
		5305-00-989-7434	52	29
		5305-00-989-7434	54	6
		5305-00-989-7434	55	20
		5305-00-989-7434	56	7
		5305-00-989-7434	59	23
		5305-00-989-7434	282	2
		5305-00-989-7434	317	5
		5305-00-989-7434	338	10
		5305-00-989-7434	396	3
		5305-00-989-7434	398	15
		5305-00-989-7434	416	28
96906	MS35207-264	5305-00-989-7435	52	28
		5305-00-989-7435	95	25
		5305-00-989-7435	207	10
		5305-00-989-7435	255	6
		5305-00-989-7435	258	5
		5305-00-989-7435	260	8
		5305-00-989-7435	337	19
		5305-00-989-7435	338	9
		5305-00-989-7435	379	53
		5305-00-989-7435	447	3
		5305-00-989-7435	449	6
96906	MS35207-265	5305-00-993-1848	52	3
		5305-00-993-1848	54	11
		5305-00-993-1848	55	22
		5305-00-993-1848	59	18
		5305-00-993-1848	79	24
		5305-00-993-1848	96	19
		5305-00-993-1848	246	2
		5305-00-993-1848	252	34
		5305-00-993-1848	255	33
		5305-00-993-1848	325	9
		5305-00-993-1848	446	20

CROSS REFERENCE INDEXES

PART NUMBER INDEX

CAGE	PART NUMBER	STOCK NUMBER	FIGURE NO	ITEM NO
		5305-00-993-1848	448	4
96906	MS35207-266	5305-00-995-3444	58	7
		5305-00-995-3444	63	7
		5305-00-995-3444	247	10
		5305-00-995-3444	256	2
		5305-00-995-3444	257	3
		5305-00-995-3444	260	14
		5305-00-995-3444	262	9
		5305-00-995-3444	263	9
		5305-00-995-3444	291	2
		5305-00-995-3444	297	6
80205	MS35207-267	5305-00-993-1851	65	23
96906	MS35207-268	5305-00-995-3442	446	3
96906	MS35207-270	5305-00-995-3440	46	18
96906	MS35207-271	5305-00-995-6311	368	27
96906	MS35207-280	5305-00-993-2738	397	2
96906	MS35207-282	5305-00-993-2460	391	1
		5305-00-993-2460	397	1
96906	MS35207-284	5305-00-993-2457	376	20
		5305-00-993-2457	382	4
		5305-00-993-2457	389	7
80205	MS35215-53	5305-00-206-2508	69	30
96906	MS35265-43	5305-00-614-3423	46	12
96906	MS35266-65	5305-00-616-4831	43B	35
96906	MS35291-41	5306-00-226-4834	211	16
		5306-00-226-4834	212	13
96906	MS35307-355	5305-00-478-0273	73	2
96906	MS35307-357	5305-00-655-9711	73	12
96906	MS35307-361	5305-00-721-5665	482	14
96906	MS35307-389	5305-00-660-2832	456	15
80205	MS35308-384	5305-00-689-7472	148	26
96906	MS35309-306	5305-00-543-5828	52	14
96906	MS35333-35	5310-00-579-5554	72	12
96906	MS35333-38	5310-00-559-0070	379	12
96906	MS35333-39	5310-00-576-5752	333	17
		5310-00-576-5752	349	4
96906	MS35333-40	5310-00-550-1130	68	7
		5310-00-550-1130	269	32
		5310-00-550-1130	327	14
		5310-00-550-1130	366	4
		5310-00-550-1130	384	7
		5310-00-550-1130	484	6
96906	MS35333-41	5310-00-167-0721	436	10
96906	MS35333-42	5310-00-595-7237	412	6
96906	MS35333-43	5310-00-685-3228	327	11
96906	MS35333-44	5310-00-194-1483	46	15
		5310-00-194-1483	388	14
96906	MS35333-47	5310-00-550-3714	380	12
96906	MS35335-33	5310-00-209-0786	55	13

CROSS REFERENCE INDEXES

PART NUMBER INDEX

CAGE	PART NUMBER	STOCK NUMBER	FIGURE NO	ITEM NO
96906	MS35336-53	5310-00-957-2677	296	2
96906	MS35338-100	5310-00-261-8278	69	31
96906	MS35338-103	5310-00-184-8971	69	29
		5310-00-184-8971	434	5
		5310-00-184-8971	435	10
96906	MS35338-141	5310-00-984-7042	73	3
		5310-00-984-7042	482	9
96906	MS35338-27	5310-00-543-5101	88	49
96906	MS35338-41	5310-00-045-4007	39	30
		5310-00-045-4007	56	22
		5310-00-045-4007	213	18
		5310-00-045-4007	214	14
		5310-00-045-4007	333	29
96906	MS35338-42	5310-00-045-3299	46	13
		5310-00-045-3299	48	2
		5310-00-045-3299	52	22
		5310-00-045-3299	64	18
		5310-00-045-3299	380	2
80205	MS35338-43	5310-00-045-3296	240	19
		5310-00-045-3296	283	29
		5310-00-045-3296	327	35
		5310-00-045-3296	410	13
		5310-00-045-3296	410	17
		5310-00-045-3296	412	10
		5310-00-045-3296	43B	23
		5310-00-045-3296	460	3
96906	MS35338-43	5310-00-045-3296	39	33
		5310-00-045-3296	54	12
		5310-00-045-3296	55	21
		5310-00-045-3296	59	17
		5310-00-045-3296	260	10
		5310-00-045-3296	335	13
		5310-00-045-3296	336	10
		5310-00-045-3296	337	18
		5310-00-045-3296	338	11
		5310-00-045-3296	416	15
		5310-00-045-3296	426	22
		5310-00-045-3296	427	17
		5310-00-045-3296	428	15
		5310-00-045-3296	442	7
		5310-00-045-3296	482	21
		5310-00-045-3296	485	16
96906	MS35338-44	5310-00-582-5965	28	7
		5310-00-582-5965	53	4
		5310-00-582-5965	62	26
		5310-00-582-5965	75	35
		5310-00-582-5965	93	18
		5310-00-582-5965	155	12
		5310-00-582-5965	156	17

CROSS REFERENCE INDEXES

PART NUMBER INDEX

CAGE	PART NUMBER	STOCK NUMBER	FIGURE NO	ITEM NO
		5310-00-582-5965	205	23
		5310-00-582-5965	228	14
		5310-00-582-5965	237	11
		5310-00-582-5965	240	24
		5310-00-582-5965	250	9
		5310-00-582-5965	267	6
		5310-00-582-5965	286	37
		5310-00-582-5965	287	11
		5310-00-582-5965	308	5
		5310-00-582-5965	311	3
		5310-00-582-5965	313	2
		5310-00-582-5965	327	39
		5310-00-582-5965	342	5
		5310-00-582-5965	343	15
		5310-00-582-5965	365	5
		5310-00-582-5965	368	23
		5310-00-582-5965	387	8
		5310-00-582-5965	410	37
		5310-00-582-5965	414	16
		5310-00-582-5965	416	20
		5310-00-582-5965	425	8
		5310-00-582-5965	426	5
		5310-00-582-5965	427	9
		5310-00-582-5965	428	19
		5310-00-582-5965	430	41
		5310-00-582-5965	443	2
		5310-00-582-5965	444	8
		5310-00-582-5965	444	9
		5310-00-582-5965	446	12
		5310-00-582-5965	451	2
		5310-00-582-5965	467	5
		5310-00-582-5965	492	16
		5310-00-582-5965	492	18
		5310-00-582-5965	498	18
		5310-00-582-5965	66A	6
96906	MS35338-45	5310-00-407-9566	19	19
		5310-00-407-9566	35	15
		5310-00-407-9566	59	4
		5310-00-407-9566	74	10
		5310-00-407-9566	136	15
		5310-00-407-9566	137	2
		5310-00-407-9566	178	15
		5310-00-407-9566	205	32
		5310-00-407-9566	206	19
		5310-00-407-9566	211	30
		5310-00-407-9566	212	30
		5310-00-407-9566	225	31
		5310-00-407-9566	226	16
		5310-00-407-9566	231	13

CROSS REFERENCE INDEXES

PART NUMBER INDEX

CAGE	PART NUMBER	STOCK NUMBER	FIGURE NO	ITEM NO
		5310-00-407-9566	268	5
		5310-00-407-9566	269	15
		5310-00-407-9566	287	19
		5310-00-407-9566	328	7
		5310-00-407-9566	329	7
		5310-00-407-9566	340	10
		5310-00-407-9566	373	9
		5310-00-407-9566	430	13
		5310-00-407-9566	432	3
		5310-00-407-9566	43B	15
		5310-00-407-9566	461	6
96906	MS35338-46	5310-00-637-9541	1	4
		5310-00-637-9541	2	5
		5310-00-637-9541	5	13
		5310-00-637-9541	16	23
		5310-00-637-9541	23	17
		5310-00-637-9541	24	25
		5310-00-637-9541	34	14
		5310-00-637-9541	35	3
		5310-00-637-9541	35	20
		5310-00-637-9541	36	15
		5310-00-637-9541	37	3
		5310-00-637-9541	38	15
		5310-00-637-9541	43	48
		5310-00-637-9541	44	3
		5310-00-637-9541	52	24
		5310-00-637-9541	62	7
		5310-00-637-9541	64	13
		5310-00-637-9541	68	3
		5310-00-637-9541	70	10
		5310-00-637-9541	72	2
		5310-00-637-9541	75	43
		5310-00-637-9541	77	2
		5310-00-637-9541	79	19
		5310-00-637-9541	83	33
		5310-00-637-9541	88	38
		5310-00-637-9541	124	15
		5310-00-637-9541	125	15
		5310-00-637-9541	164	3
		5310-00-637-9541	169	2
		5310-00-637-9541	174	14
		5310-00-637-9541	175	8
		5310-00-637-9541	286	9
		5310-00-637-9541	286	35
		5310-00-637-9541	328	17
		5310-00-637-9541	33A	16
		5310-00-637-9541	33B	2
		5310-00-637-9541	340	3
		5310-00-637-9541	352	2

CROSS REFERENCE INDEXES

PART NUMBER INDEX

CAGE	PART NUMBER	STOCK NUMBER	FIGURE NO	ITEM NO
		5310-00-637-9541	363	11
		5310-00-637-9541	372	5
		5310-00-637-9541	379	23
		5310-00-637-9541	38A	3
		5310-00-637-9541	43B	31
		5310-00-637-9541	443	12
		5310-00-637-9541	443	13
		5310-00-637-9541	457	6
		5310-00-637-9541	459	2
		5310-00-637-9541	468	8
		5310-00-637-9541	472	15
		5310-00-637-9541	475	23
		5310-00-637-9541	476	2
		5310-00-637-9541	481	7
		5310-00-637-9541	490	9
96906	MS35338-47	5310-00-209-0965	35	22
		5310-00-209-0965	36	10
		5310-00-209-0965	37	10
		5310-00-209-0965	38	10
		5310-00-209-0965	42	4
		5310-00-209-0965	150	35
		5310-00-209-0965	151	41
		5310-00-209-0965	171	3
		5310-00-209-0965	472	21
		5310-00-209-0965	475	17
96906	MS35338-48	5310-00-584-5272	156	21
		5310-00-584-5272	33A	2
		5310-00-584-5272	363	19
		5310-00-584-5272	369	1
		5310-00-584-5272	410	35
		5310-00-584-5272	412	26
		5310-00-584-5272	424	7
		5310-00-584-5272	434	3
		5310-00-584-5272	435	7
96906	MS35338-49	5310-00-167-0680	476	12
96906	MS35338-50	5310-00-820-6653	193	6
96906	MS35338-63	5310-00-274-8715	249	3
		5310-00-274-8715	315	11
96906	MS35338-65	5310-00-011-5093	138	17
		5310-00-011-5093	139	14
		5310-00-011-5093	145	17
		5310-00-011-5093	146	14
		5310-00-011-5093	164	3
96906	MS35338-67	5310-00-011-6121	70	7
96906	MS35340-43	5310-00-721-7809	35	12
		5310-00-721-7809	398	12
96906	MS35340-47	5310-00-655-9370	438	18
96906	MS35340-48	5310-00-834-7606	438	13
96906	MS35387-1	9905-00-205-2795	296	17

CROSS REFERENCE INDEXES

PART NUMBER INDEX

CAGE	PART NUMBER	STOCK NUMBER	FIGURE NO	ITEM NO
96906	MS35421-1	6220-00-299-7425	63	3
		6220-00-299-7425	63	9
96906	MS35421-2	6220-00-299-7426	63	3
		6220-00-299-7426	63	9
96906	MS35422-1	6220-00-729-9295	63	2
96906	MS35423-1	6220-00-577-3434	63	1
96906	MS35423-2	6220-00-726-1916	63	1
96906	MS35425-68	5310-01-106-1144	331	38
96906	MS35425-74	5310-01-088-2490	340	2
96906	MS35425-75	5310-01-078-5996	261	1
96906	MS35436-16	5940-00-020-0072	79	12
96906	MS35489-11	5325-00-291-9366	92	13
		5325-00-291-9366	333	34
		5325-00-291-9366	380	7
96906	MS35489-110	5325-00-202-4005	80	17
96906	MS35489-115	5325-00-928-6214	65	7
96906	MS35489-135	5325-00-263-6648	496	3
96906	MS35489-143	5325-01-292-7558	485	24
96906	MS35489-149	5325-01-309-7164	379	16
96906	MS35489-17	5325-01-242-7083	333	10
		5325-01-242-7083	367	10
96906	MS35489-18	5325-00-276-6090	496	21
96906	MS35489-19	5325-00-276-6091	369	4
96906	MS35489-21	5325-00-270-8891	380	5
96906	MS35489-23	5325-00-276-6343	473	9
		5325-00-276-6343	481	10
96906	MS35489-27	5325-00-290-1960	70	13
96906	MS35489-39X	5325-01-274-3317	95	30
96906	MS35489-40	5325-00-185-0004	96	18
96906	MS35489-41	5325-01-088-7468	327	17
96906	MS35489-45	5325-00-285-8363	424	6
96906	MS35489-48	5325-00-174-9332	80	12
		5325-00-174-9332	315	13
96906	MS35489-50	5325-00-754-1155	428	8
96906	MS35492-28	5305-00-900-2546	382	1
96906	MS35492-76	5305-00-902-6643	383	2
96906	MS35493-51	5305-00-901-2099	394	5
96906	MS35493-55	5305-00-901-2134	385	13
96906	MS35493-74	5305-00-056-7879	385	1
		5305-00-056-7879	395	11
		5305-00-056-7879	396	4
96906	MS35493-76	5305-00-014-9926	387	12
		5305-00-014-9926	392	1
96906	MS35495-124	5305-01-315-9512	392	2
96906	MS35495-126	5305-01-315-9882	395	24
		5305-01-315-9882	397	12
96906	MS35495-127	5305-01-317-0409	393	6
		5305-01-317-0409	395	20
96906	MS35649-103	5310-00-852-8593	498	10

CROSS REFERENCE INDEXES

PART NUMBER INDEX

CAGE	PART NUMBER	STOCK NUMBER	FIGURE NO	ITEM NO
96906	MS35649-202	5310-00-934-9758	64	16
		5310-00-934-9758	64	26
		5310-00-934-9758	74	9
		5310-00-934-9758	88	43
		5310-00-934-9758	208	28
		5310-00-934-9758	213	14
		5310-00-934-9758	214	10
		5310-00-934-9758	240	1
		5310-00-934-9758	240	13
		5310-00-934-9758	240	20
		5310-00-934-9758	241	7
		5310-00-934-9758	269	2
		5310-00-934-9758	283	30
		5310-00-934-9758	327	30
		5310-00-934-9758	335	14
		5310-00-934-9758	336	11
		5310-00-934-9758	442	8
96906	MS35649-205	5310-00-934-9764	63	5
		5310-00-934-9764	85	6
		5310-00-934-9764	169	19
		5310-00-934-9764	246	33
		5310-00-934-9764	293	15
96906	MS35649-2252	5310-00-997-1888	88	39
		5310-00-997-1888	324	28
		5310-00-997-1888	375	19
		5310-00-997-1888	375	27
		5310-00-997-1888	378	27
96906	MS35649-2255	5310-00-855-1102	52	16
96906	MS35649-2384	5310-00-477-6768	482	8
96906	MS35649-262	5310-00-934-9747	333	28
96906	MS35649-282	5310-00-934-9757	48	1
96906	MS35650-302	5310-00-934-9751	45	49
		5310-00-934-9751	327	34
		5310-00-934-9751	333	18
		5310-00-934-9751	482	22
96906	MS35650-382	5310-00-934-9754	380	1
96906	MS35690-824	5310-00-010-3028	437	6
96906	MS35691-33	5310-00-834-8732	44	6
96906	MS35692-53	5310-01-280-6751	39	56
96906	MS35692-54	5310-00-850-7004	144	10
		5310-00-850-7004	144	18
		5310-00-850-7004	152	10
		5310-00-850-7004	152	18
		5310-00-850-7004	170	3
		5310-00-850-7004	170	9
		5310-00-850-7004	170	13
		5310-00-850-7004	183	5
		5310-00-850-7004	185	14
		5310-00-850-7004	187	18

CROSS REFERENCE INDEXES

PART NUMBER INDEX

CAGE	PART NUMBER	STOCK NUMBER	FIGURE NO	ITEM NO
		5310-00-850-7004	188	14
		5310-00-850-7004	437	10
96906	MS35692-62	5310-00-850-6993	186	9
		5310-00-850-6993	188	18
96906	MS35692-9	5310-00-850-6868	188	34
96906	MS35692-94	5310-00-849-6882	191	11
80205	MS35751-42	5306-00-911-5005	433	1
80205	MS35751-43	5306-00-753-6996	403	13
96906	MS35751-44	5306-00-012-0231	403	10
80205	MS35756-17	5315-00-012-4553	36	5
		5315-00-012-4553	38	5
		5315-00-012-4553	39	8
		5315-00-012-4553	43B	26
80205	MS35756-20	5315-00-616-5501	476	8
80205	MS35756-6	5315-00-616-5514	43	4
80205	MS35756-8	5315-00-616-5526	35	9
96906	MS35764-1303	5306-01-068-4592	409	5
		5306-01-068-4592	411	11
		5306-01-068-4592	415	10
96906	MS35764-848	5306-01-253-1611	150	36
96906	MS35764-850	5306-01-253-1612	202	34
96906	MS35764-851	5306-01-203-2637	313	21
96906	MS35764-853	5306-01-276-0848	35	21
96906	MS35764-861	5306-01-254-6356	171	4
96906	MS35764-887	5306-01-253-4426	179	8
96906	MS35769-9	5330-01-355-3686	4	24
96906	MS35810-1	5315-00-417-5223	238	13
96906	MS35810-3	5315-00-754-0848	153	21
96906	MS35810-4	5315-00-815-8840	153	4
		5315-00-815-8840	155	17
96906	MS35810-6	5315-00-140-1938	293	16
96906	MS35823-7A	5340-01-053-7128	224	2
96906	MS35842-11	4730-00-908-3194	310	7
		4730-00-908-3194	379	9
96906	MS35842-14	4730-00-908-6292	10	14
		4730-00-908-6292	331	20
		4730-00-908-6292	368	3
96906	MS39061-4	5930-00-226-6429	46	6
96906	MS45904-60	5310-00-080-9786	88	27
		5310-00-080-9786	215	9
		5310-00-080-9786	222	10
		5310-00-080-9786	339	8
		5310-00-080-9786	346	6
		5310-00-080-9786	347	3
		5310-00-080-9786	426	18
		5310-00-080-9786	427	21
		5310-00-080-9786	467	1
96906	MS45904-68	5310-00-889-2528	327	13
96906	MS49006-6	4730-00-045-9769	142	30

CROSS REFERENCE INDEXES

PART NUMBER INDEX

CAGE	PART NUMBER	STOCK NUMBER	FIGURE NO	ITEM NO
		4730-00-045-9769	143	39
		4730-00-045-9769	150	30
		4730-00-045-9769	151	39
96906	MS51085-1	2910-00-025-3493	335	9
		2910-00-025-3493	336	6
		2910-00-025-3493	388	7
96906	MS51108-139	5305-01-331-6284	437	3
96906	MS51113-1	5930-00-307-8856	46	19
96906	MS51335-1	2540-00-078-6633	191	9
		2540-00-078-6633	191	17
96906	MS51412-1	5310-01-303-4701	43	31
		5310-01-303-4701	425	6
		5310-01-303-4701	426	9
		5310-01-303-4701	427	7
96906	MS51412-18	5310-01-253-1618	52	31
		5310-01-253-1618	208	27
		5310-01-253-1618	252	5
		5310-01-253-1618	260	11
		5310-01-253-1618	273	13
		5310-01-253-1618	275	12
		5310-01-253-1618	276	8
		5310-01-253-1618	300	13
		5310-01-253-1618	327	29
96906	MS51412-2	5310-01-234-9416	35	14
		5310-01-234-9416	37	7
		5310-01-234-9416	52	11
		5310-01-234-9416	56	8
		5310-01-234-9416	59	16
		5310-01-234-9416	234	16
		5310-01-234-9416	246	32
		5310-01-234-9416	247	23
		5310-01-234-9416	249	44
		5310-01-234-9416	260	7
		5310-01-234-9416	269	3
		5310-01-234-9416	284	14
		5310-01-234-9416	298	8
		5310-01-234-9416	307	12
		5310-01-234-9416	321	16
		5310-01-234-9416	327	36
		5310-01-234-9416	327	42
96906	MS51412-23	5310-01-333-0060	283	16
96906	MS51412-36	5310-01-449-0628	50	7
96906	MS51412-5	5310-01-234-9415	88	16
96906	MS51415-7	5310-01-218-7137	457	10
96906	MS51415-9	5310-01-216-7390	44	5
		5310-01-216-7390	209	14
		5310-01-216-7390	443	13
		5310-01-216-7390	457	11
96906	MS51470-03	5310-01-249-0899	398	1

CROSS REFERENCE INDEXES

PART NUMBER INDEX

CAGE	PART NUMBER	STOCK NUMBER	FIGURE NO	ITEM NO
96906	MS51471-01	5310-01-272-9981	142	35
		5310-01-272-9981	143	41
96906	MS51480-05	5305-01-264-0923	245	9
96906	MS51500A10-6	4730-01-066-1278	6	9
96906	MS51815-4P	4730-00-985-4804	505	16
96906	MS51844-63	4030-01-142-0456	276	4
96906	MS51848-13	5310-01-016-9348	283	22
96906	MS51849-100	5305-01-075-0957	243	20
		5305-01-075-0957	308	4
96906	MS51849-11	5305-00-164-7082	65	8
		5305-00-164-7082	65	15
96906	MS51849-33	5305-00-227-1543	333	31
96906	MS51849-53	5305-00-115-9406	349	8
96906	MS51849-55	5305-00-115-9934	205	14
96906	MS51849-64	5305-00-180-4966	39	6
		5305-00-180-4966	259	12
		5305-00-180-4966	263	7
		5305-00-180-4966	289	4
		5305-00-180-4966	292	3
		5305-00-180-4966	365	20
96906	MS51849-65	5305-01-006-2052	252	37
96906	MS51849-74	5305-00-470-3321	74	11
		5305-00-470-3321	283	26
96906	MS51849-75	5305-01-006-2053	208	25
		5305-01-006-2053	279	29
		5305-01-006-2053	429	11
96906	MS51849-76	5305-00-240-0194	67	2
		5305-00-240-0194	88	10
		5305-00-240-0194	169	22
		5305-00-240-0194	197	33
		5305-00-240-0194	199	59
		5305-00-240-0194	205	4
		5305-00-240-0194	206	7
		5305-00-240-0194	225	50
		5305-00-240-0194	226	30
		5305-00-240-0194	248	28
		5305-00-240-0194	286	31
		5305-00-240-0194	327	26
		5305-00-240-0194	411	5
		5305-00-240-0194	460	2
96906	MS51849-77	5305-01-005-6715	243	27
96906	MS51849-78	5305-00-240-6668	85	3
		5305-00-240-6668	88	1
		5305-00-240-6668	327	48
96906	MS51849-79	5305-00-240-6541	227	50
96906	MS51849-95	5305-01-016-4344	453	18
96906	MS51849-98	5305-00-390-0524	83	29
		5305-00-390-0524	272	8
96906	MS51850-69	5305-01-315-9524	395	15

CROSS REFERENCE INDEXES

PART NUMBER INDEX

CAGE	PART NUMBER	STOCK NUMBER	FIGURE NO	ITEM NO
96906	MS51851-126	5305-01-101-3312	443	7
		5305-01-101-3312	457	4
96906	MS51851-34	5305-01-076-3150	50	5
96906	MS51851-43	5305-00-757-8287	379	5
96906	MS51851-64	5305-00-757-8122	75	44
		5305-00-757-8122	488	12
96906	MS51851-85	5305-00-191-3640	313	10
		5305-00-191-3640	443	9
		5305-00-191-3640	457	9
96906	MS51851-95	5305-01-087-4478	5	9
96906	MS51859-20	5310-01-313-3562	329	16
		5310-01-313-3562	461	4
96906	MS51861-22C	5305-01-298-2436	332	45
96906	MS51861-26	5305-00-432-4165	49	11
96906	MS51861-34	5305-00-058-1082	12	34
		5305-00-058-1082	274	28
96906	MS51861-35	5305-00-432-4170	403	12
		5305-00-432-4170	433	4
96906	MS51861-45	5305-00-432-4201	485	5
96906	MS51861-49	5305-00-432-4205	208	9
		5305-00-432-4205	280	34
		5305-00-432-4205	281	34
		5305-00-432-4205	331	29
96906	MS51861-67	5305-00-432-4253	395	1
		5305-00-432-4253	396	2
96906	MS51861-69	5305-00-432-4254	446	32
96906	MS51863-22	5305-01-076-6308	43	45
96906	MS51863-33	5305-01-138-9540	46	4
		5305-01-138-9540	97	11
		5305-01-138-9540	367	1
96906	MS51869-23	5305-01-039-6633	44	28
96906	MS51871-1	5305-01-084-6067	124	17
		5305-01-084-6067	125	17
		5305-01-084-6067	366	3
96906	MS51873-32	4730-01-315-3242	385	9
96906	MS51941-10	5310-01-025-6444	383	8
96906	MS51943-3	5310-00-472-2963	421	9
		5310-00-472-2963	422	4
96906	MS51943-31	5310-00-061-4650	5	7
		5310-00-061-4650	13	18
		5310-00-061-4650	14	24
		5310-00-061-4650	15	3
		5310-00-061-4650	16	3
		5310-00-061-4650	17	9
		5310-00-061-4650	18	4
		5310-00-061-4650	18	10
		5310-00-061-4650	21	1
		5310-00-061-4650	25	7
		5310-00-061-4650	27	14

CROSS REFERENCE INDEXES

PART NUMBER INDEX

CAGE	PART NUMBER	STOCK NUMBER	FIGURE NO	ITEM NO
		5310-00-061-4650	29	3
		5310-00-061-4650	42	8
		5310-00-061-4650	46	21
		5310-00-061-4650	50	8
		5310-00-061-4650	71	10
		5310-00-061-4650	84	22
		5310-00-061-4650	97	4
		5310-00-061-4650	98	13
		5310-00-061-4650	99	11
		5310-00-061-4650	124	13
		5310-00-061-4650	125	13
		5310-00-061-4650	141	17
		5310-00-061-4650	153	17
		5310-00-061-4650	169	27
		5310-00-061-4650	169	33
		5310-00-061-4650	177	13
		5310-00-061-4650	178	24
		5310-00-061-4650	202	26
		5310-00-061-4650	203	9
		5310-00-061-4650	203	23
		5310-00-061-4650	204	14
		5310-00-061-4650	206	24
		5310-00-061-4650	210	4
		5310-00-061-4650	211	26
		5310-00-061-4650	212	27
		5310-00-061-4650	241	5
		5310-00-061-4650	243	8
		5310-00-061-4650	244	7
		5310-00-061-4650	245	16
		5310-00-061-4650	245	32
		5310-00-061-4650	246	18
		5310-00-061-4650	247	5
		5310-00-061-4650	247	18
		5310-00-061-4650	248	7
		5310-00-061-4650	249	27
		5310-00-061-4650	250	19
		5310-00-061-4650	251	1
		5310-00-061-4650	252	22
		5310-00-061-4650	253	21
		5310-00-061-4650	254	22
		5310-00-061-4650	255	20
		5310-00-061-4650	267	3
		5310-00-061-4650	267	13
		5310-00-061-4650	269	13
		5310-00-061-4650	270	1
		5310-00-061-4650	270	26
		5310-00-061-4650	271	9
		5310-00-061-4650	272	2
		5310-00-061-4650	274	18

CROSS REFERENCE INDEXES

PART NUMBER INDEX

CAGE	PART NUMBER	STOCK NUMBER	FIGURE NO	ITEM NO
		5310-00-061-4650	275	20
		5310-00-061-4650	276	20
		5310-00-061-4650	285	13
		5310-00-061-4650	286	16
		5310-00-061-4650	288	22
		5310-00-061-4650	288	30
		5310-00-061-4650	289	5
		5310-00-061-4650	293	31
		5310-00-061-4650	316	21
		5310-00-061-4650	323	13
		5310-00-061-4650	331	9
		5310-00-061-4650	332	42
		5310-00-061-4650	333	39
		5310-00-061-4650	334	5
		5310-00-061-4650	338	22
		5310-00-061-4650	339	17
		5310-00-061-4650	343	17
		5310-00-061-4650	366	30
		5310-00-061-4650	368	32
		5310-00-061-4650	375	28
		5310-00-061-4650	376	13
		5310-00-061-4650	384	9
		5310-00-061-4650	398	27
		5310-00-061-4650	399	15
		5310-00-061-4650	400	13
		5310-00-061-4650	402	12
		5310-00-061-4650	409	9
		5310-00-061-4650	411	10
		5310-00-061-4650	413	5
		5310-00-061-4650	415	15
		5310-00-061-4650	417	18
		5310-00-061-4650	418	9
		5310-00-061-4650	419	4
		5310-00-061-4650	420	6
		5310-00-061-4650	421	6
		5310-00-061-4650	422	8
		5310-00-061-4650	423	9
		5310-00-061-4650	429	22
		5310-00-061-4650	430	17
		5310-00-061-4650	430	38
		5310-00-061-4650	440	21
		5310-00-061-4650	446	16
		5310-00-061-4650	468	4
		5310-00-061-4650	475	9
		5310-00-061-4650	477	5
		5310-00-061-4650	478	3
		5310-00-061-4650	484	15
		5310-00-061-4650	485	14
		5310-00-061-4650	486	9

CROSS REFERENCE INDEXES

PART NUMBER INDEX

CAGE	PART NUMBER	STOCK NUMBER	FIGURE NO	ITEM NO
		5310-00-061-4650	492	7
		5310-00-061-4650	176A	21
96906	MS51943-32	5310-00-935-9022	388	10
		5310-00-935-9022	485	17
96906	MS51943-33	5310-00-814-0673	74	8
		5310-00-814-0673	83	25
		5310-00-814-0673	144	4
		5310-00-814-0673	152	4
		5310-00-814-0673	153	25
		5310-00-814-0673	154	6
		5310-00-814-0673	169	33
		5310-00-814-0673	189	6
		5310-00-814-0673	190	1
		5310-00-814-0673	205	1
		5310-00-814-0673	206	10
		5310-00-814-0673	206	13
		5310-00-814-0673	208	29
		5310-00-814-0673	209	8
		5310-00-814-0673	211	19
		5310-00-814-0673	212	16
		5310-00-814-0673	226	12
		5310-00-814-0673	230	16
		5310-00-814-0673	242	5
		5310-00-814-0673	250	23
		5310-00-814-0673	266	1
		5310-00-814-0673	268	10
		5310-00-814-0673	268	29
		5310-00-814-0673	269	16
		5310-00-814-0673	284	12
		5310-00-814-0673	288	20
		5310-00-814-0673	292	15
		5310-00-814-0673	328	6
		5310-00-814-0673	328	15
		5310-00-814-0673	329	9
		5310-00-814-0673	333	21
		5310-00-814-0673	338	27
		5310-00-814-0673	339	22
		5310-00-814-0673	364	7
		5310-00-814-0673	375	31
		5310-00-814-0673	390	5
		5310-00-814-0673	401	9
		5310-00-814-0673	409	4
		5310-00-814-0673	411	4
		5310-00-814-0673	413	6
		5310-00-814-0673	414	11
		5310-00-814-0673	415	14
		5310-00-814-0673	416	14
		5310-00-814-0673	417	11
		5310-00-814-0673	418	8

CROSS REFERENCE INDEXES

PART NUMBER INDEX

CAGE	PART NUMBER	STOCK NUMBER	FIGURE NO	ITEM NO
		5310-00-814-0673	419	9
		5310-00-814-0673	420	4
		5310-00-814-0673	423	4
		5310-00-814-0673	428	14
		5310-00-814-0673	429	18
		5310-00-814-0673	440	11
		5310-00-814-0673	445	2
		5310-00-814-0673	463	12
		5310-00-814-0673	468	7
		5310-00-814-0673	480	4
96906	MS51943-34	5310-00-241-6658	154	5
		5310-00-241-6658	198	19
		5310-00-241-6658	273	16
		5310-00-241-6658	280	47
		5310-00-241-6658	281	47
		5310-00-241-6658	317	11
		5310-00-241-6658	373	8
		5310-00-241-6658	376	18
		5310-00-241-6658	378	28
		5310-00-241-6658	389	14
		5310-00-241-6658	415	4
		5310-00-241-6658	433	7
96906	MS51943-35	5310-00-935-9021	2	15
		5310-00-935-9021	23	4
		5310-00-935-9021	24	10
		5310-00-935-9021	26	6
		5310-00-935-9021	52	23
		5310-00-935-9021	103	17
		5310-00-935-9021	144	14
		5310-00-935-9021	152	14
		5310-00-935-9021	159	4
		5310-00-935-9021	160	9
		5310-00-935-9021	164	4
		5310-00-935-9021	169	1
		5310-00-935-9021	187	10
		5310-00-935-9021	189	2
		5310-00-935-9021	190	3
		5310-00-935-9021	205	9
		5310-00-935-9021	210	14
		5310-00-935-9021	245	30
		5310-00-935-9021	251	45
		5310-00-935-9021	266	24
		5310-00-935-9021	268	19
		5310-00-935-9021	270	19
		5310-00-935-9021	270	21
		5310-00-935-9021	272	29
		5310-00-935-9021	273	22
		5310-00-935-9021	274	17
		5310-00-935-9021	275	19

CROSS REFERENCE INDEXES

PART NUMBER INDEX

CAGE	PART NUMBER	STOCK NUMBER	FIGURE NO	ITEM NO
		5310-00-935-9021	276	19
		5310-00-935-9021	277	4
		5310-00-935-9021	278	12
		5310-00-935-9021	283	8
		5310-00-935-9021	285	9
		5310-00-935-9021	286	28
		5310-00-935-9021	288	13
		5310-00-935-9021	292	16
		5310-00-935-9021	293	6
		5310-00-935-9021	369	10
		5310-00-935-9021	372	6
		5310-00-935-9021	398	25
		5310-00-935-9021	409	8
		5310-00-935-9021	410	9
		5310-00-935-9021	411	14
		5310-00-935-9021	412	7
		5310-00-935-9021	414	9
		5310-00-935-9021	415	13
		5310-00-935-9021	416	10
		5310-00-935-9021	425	16
		5310-00-935-9021	426	20
		5310-00-935-9021	427	20
		5310-00-935-9021	428	10
		5310-00-935-9021	431	7
		5310-00-935-9021	440	17
		5310-00-935-9021	441	11
		5310-00-935-9021	456	18
		5310-00-935-9021	463	3
		5310-00-935-9021	464	1
		5310-00-935-9021	470	13
		5310-00-935-9021	471	5
		5310-00-935-9021	484	13
		5310-00-935-9021	490	10
96906	MS51943-37	5310-00-241-6659	170	14
96906	MS51943-39	5310-00-488-3889	2	8
		5310-00-488-3889	140	1
		5310-00-488-3889	147	1
		5310-00-488-3889	179	3
		5310-00-488-3889	180	4
		5310-00-488-3889	181	9
		5310-00-488-3889	182	4
		5310-00-488-3889	183	14
		5310-00-488-3889	184	1
		5310-00-488-3889	185	7
		5310-00-488-3889	186	7
		5310-00-488-3889	187	11
		5310-00-488-3889	188	5
		5310-00-488-3889	188	38
		5310-00-488-3889	191	1

CROSS REFERENCE INDEXES

PART NUMBER INDEX

CAGE	PART NUMBER	STOCK NUMBER	FIGURE NO	ITEM NO
		5310-00-488-3889	199	22
		5310-00-488-3889	242	8
		5310-00-488-3889	245	26
		5310-00-488-3889	251	47
		5310-00-488-3889	270	22
		5310-00-488-3889	283	18
		5310-00-488-3889	315	5
		5310-00-488-3889	429	36
		5310-00-488-3889	441	5
		5310-00-488-3889	442	4
		5310-00-488-3889	444	3
		5310-00-488-3889	446	28
		5310-00-488-3889	453	1
		5310-00-488-3889	455	6
		5310-00-488-3889	456	17
		5310-00-488-3889	463	9
		5310-00-488-3889	471	1
		5310-00-488-3889	487A	6
		5310-00-488-3889	487B	1
96906	MS51943-45	5310-00-409-3333	144	3
		5310-00-409-3333	152	3
		5310-00-409-3333	181	16
		5310-00-409-3333	182	2
		5310-00-409-3333	183	13
		5310-00-409-3333	184	19
		5310-00-409-3333	188	28
		5310-00-409-3333	195	13
		5310-00-409-3333	270	35
		5310-00-409-3333	271	5
		5310-00-409-3333	271	22
		5310-00-409-3333	456	20
		5310-00-409-3333	471	3
96906	MS51943-6	5310-01-344-8250	16	32
96906	MS51943-71	5310-01-408-7138	462	4
96906	MS51957-131	5305-00-182-9304	255	35
96906	MS51957-134	5305-01-052-4438	280	7
96906	MS51957-28	5305-00-054-6652	214	15
96906	MS51957-45	5305-00-054-6670	482	19
96906	MS51957-47	5305-00-054-6672	64	17
		5305-00-054-6672	252	7
96906	MS51957-63	5305-00-050-9229	347	2
96906	MS51957-64B	5305-01-083-1591	465	2
96906	MS51957-67	5305-00-050-9233	280	16
96906	MS51957-77	5305-00-071-1313	373	4
		5305-00-071-1313	376	4
96906	MS51957-79	5305-00-071-1315	316	16
		5305-00-071-1315	320	15
		5305-00-071-1315	320	27
		5305-00-071-1315	375	23

CROSS REFERENCE INDEXES

PART NUMBER INDEX

CAGE	PART NUMBER	STOCK NUMBER	FIGURE NO	ITEM NO
		5305-00-071-1315	378	23
96906	MS51957-8	5305-00-054-5642	238	21
96906	MS51957-83	5305-00-071-1318	214	4
		5305-00-071-1318	246	24
		5305-00-071-1318	251	7
		5305-00-071-1318	252	26
		5305-00-071-1318	267	18
		5305-00-071-1318	296	15
96906	MS51958-63	5305-00-059-3659	227	14
		5305-00-059-3659	321	6
		5305-00-059-3659	339	4
		5305-00-059-3659	373	3
		5305-00-059-3659	376	5
		5305-00-059-3659	410	14
		5305-00-059-3659	412	9
		5305-00-059-3659	416	12
		5305-00-059-3659	426	21
		5305-00-059-3659	427	18
		5305-00-059-3659	428	12
96906	MS51958-64	5305-00-059-3660	65	19
		5305-00-059-3660	92	14
		5305-00-059-3660	95	43
		5305-00-059-3660	218	5
		5305-00-059-3660	236	1
		5305-00-059-3660	253	7
		5305-00-059-3660	253	10
		5305-00-059-3660	253	18
		5305-00-059-3660	253	30
		5305-00-059-3660	255	9
		5305-00-059-3660	255	17
		5305-00-059-3660	255	23
		5305-00-059-3660	259	5
		5305-00-059-3660	260	2
		5305-00-059-3660	262	13
		5305-00-059-3660	325	22
		5305-00-059-3660	426	17
		5305-00-059-3660	427	22
96906	MS51958-65	5305-00-059-3661	255	9
		5305-00-059-3661	255	17
		5305-00-059-3661	255	23
		5305-00-059-3661	255	28
		5305-00-059-3661	410	25
		5305-00-059-3661	412	19
96906	MS51959-81	5305-00-719-5021	339	14
		5305-00-719-5021	409	12
		5305-00-719-5021	413	3
		5305-00-719-5021	415	3
		5305-00-719-5021	486	11
96906	MS51959-82	5305-00-719-5017	246	11

CROSS REFERENCE INDEXES

PART NUMBER INDEX

CAGE	PART NUMBER	STOCK NUMBER	FIGURE NO	ITEM NO
96906	MS51959-84	5305-00-719-5003	248	29
96906	MS51959-99	5305-00-763-7829	225	1
96906	MS51960-65	5305-00-071-1322	246	31
		5305-00-071-1322	410	29
96906	MS51960-70	5305-00-071-1327	316	10
		5305-00-071-1327	320	8
		5305-00-071-1327	320	20
		5305-00-071-1327	378	16
80205	MS51964-65	5305-00-724-5812	333	20
96906	MS51965-29	5305-00-724-6783	368	9
96906	MS51967-12	5310-00-896-0903	170	23
		5310-00-896-0903	194	7
		5310-00-896-0903	195	9
		5310-00-896-0903	202	30
		5310-00-896-0903	425	10
		5310-00-896-0903	426	12
		5310-00-896-0903	427	11
96906	MS51967-15	5310-00-761-3706	283	10
		5310-00-761-3706	285	10
96906	MS51967-18	5310-00-763-8919	165	6
		5310-00-763-8919	179	12
96906	MS51967-2	5310-00-761-6882	64	12
		5310-00-761-6882	252	9
		5310-00-761-6882	494	10
		5310-00-761-6882	495	14
96906	MS51967-3	5310-00-905-0762	213	11
		5310-00-905-0762	240	23
		5310-00-905-0762	311	14
		5310-00-905-0762	313	1
		5310-00-905-0762	315	12
		5310-00-905-0762	327	40
		5310-00-905-0762	425	9
		5310-00-905-0762	426	6
		5310-00-905-0762	427	10
		5310-00-905-0762	443	1
		5310-00-905-0762	444	9
		5310-00-905-0762	457	5
96906	MS51967-45	5310-00-432-3760	441	10
96906	MS51967-5	5310-00-880-7744	71	2
		5310-00-880-7744	209	5
		5310-00-880-7744	226	21
		5310-00-880-7744	230	5
		5310-00-880-7744	235	8
		5310-00-880-7744	236	6
		5310-00-880-7744	295	10
96906	MS51967-6	5310-00-931-8167	203	21
		5310-00-931-8167	204	9
		5310-00-931-8167	473	6
		5310-00-931-8167	474	9

CROSS REFERENCE INDEXES

PART NUMBER INDEX

CAGE	PART NUMBER	STOCK NUMBER	FIGURE NO	ITEM NO
96906	MS51967-8	5310-00-732-0558	44	4
		5310-00-732-0558	62	8
		5310-00-732-0558	75	42
		5310-00-732-0558	77	1
		5310-00-732-0558	89	9
		5310-00-732-0558	401	11
		5310-00-732-0558	490	15
96906	MS51967-9	5310-00-761-0654	15	23
		5310-00-761-0654	16	27
		5310-00-761-0654	39	11
		5310-00-761-0654	205	34
		5310-00-761-0654	206	23
		5310-00-761-0654	286	8
96906	MS51968-18	5310-00-763-8906	476	11
96906	MS51968-2	5310-00-768-0319	35	19
		5310-00-768-0319	43	49
		5310-00-768-0319	62	27
		5310-00-768-0319	487	11
96906	MS51968-5	5310-00-880-7746	137	1
96906	MS51968-6	5310-00-905-4600	59	3
		5310-00-905-4600	136	14
96906	MS51969-5	5310-00-913-5474	70	8
		5310-00-913-5474	481	5
80205	MS51973-50	5305-00-728-6274	213	26
		5305-00-728-6274	214	21
96906	MS51987-117	5315-01-278-2123	292	21
96906	MS51988-7	5310-00-930-8214	167	6
		5310-00-930-8214	245	27
96906	MS51988-8	5310-00-447-8774	103	2
		5310-00-447-8774	127	1
96906	MS521301A203R	4720-00-491-0102	BULK	27
96906	MS521301A203R 58		379	10
96906	MS521301A203R 7		379	32
96906	MS521301A203R 74		379	8
96906	MS521302B206R	4720-00-555-8015	BULK	28
96906	MS53000-1	2590-00-801-2355	51	8
96906	MS75021-2	5935-00-846-3884	83	35
		5935-00-846-3884	86	37
96906	MS87006-33	4030-00-948-7315	293	25
96906	MS87006-53	4030-00-916-2141	191	20
96906	MS90724-39	5310-01-110-1145	395	16
80205	MS90725-14	5305-00-071-2237	338	21
		5305-00-071-2237	339	16
		5305-00-071-2237	393	1
		5305-00-071-2237	395	12
		5305-00-071-2237	413	8
		5305-00-071-2237	486	5
80205	MS90725-15	5305-00-071-2236	266	23
		5305-00-071-2236	401	14

CROSS REFERENCE INDEXES

PART NUMBER INDEX

CAGE	PART NUMBER	STOCK NUMBER	FIGURE NO	ITEM NO
80205	MS90725-31	5306-00-225-8496	180	13
80205	MS90725-33	5306-00-225-8498	250	20
		5306-00-225-8498	418	4
		5306-00-225-8498	419	5
		5306-00-225-8498	420	3
96906	MS90725-33	5306-00-225-8498	213	9
		5306-00-225-8498	421	1
		5306-00-225-8498	422	1
		5306-00-225-8498	423	1
80205	MS90725-34	5306-00-225-8499	153	27
		5306-00-225-8499	203	20
		5306-00-225-8499	205	31
		5306-00-225-8499	206	2
		5306-00-225-8499	206	18
		5306-00-225-8499	333	24
96906	MS90725-34	5306-00-225-8499	74	1
		5306-00-225-8499	154	10
		5306-00-225-8499	268	4
		5306-00-225-8499	329	11
		5306-00-225-8499	339	20
		5306-00-225-8499	402	5
		5306-00-225-8499	409	1
		5306-00-225-8499	410	8
		5306-00-225-8499	411	1
		5306-00-225-8499	413	1
		5306-00-225-8499	414	7
		5306-00-225-8499	415	1
		5306-00-225-8499	416	7
		5306-00-225-8499	418	6
		5306-00-225-8499	419	7
		5306-00-225-8499	420	1
		5306-00-225-8499	421	8
		5306-00-225-8499	422	3
		5306-00-225-8499	423	8
		5306-00-225-8499	428	7
80205	MS90725-36	5306-01-075-8519	209	12
		5306-01-075-8519	430	12
80205	MS90725-47	5306-00-225-8511	12	13
80205	MS90725-5	5305-00-068-0501	18	13
		5305-00-068-0501	118	12
		5305-00-068-0501	286	19
		5305-00-068-0501	307	9
96906	MS90725-58	5305-00-115-9526	72	1
		5305-00-115-9526	251	4
96906	MS90725-6	5305-00-068-0502	19	16
		5305-00-068-0502	21	4
		5305-00-068-0502	50	11
		5305-00-068-0502	53	3
		5305-00-068-0502	58	9

CROSS REFERENCE INDEXES

PART NUMBER INDEX

CAGE	PART NUMBER	STOCK NUMBER	FIGURE NO	ITEM NO
		5305-00-068-0502	68	1
		5305-00-068-0502	70	9
		5305-00-068-0502	84	24
		5305-00-068-0502	93	16
		5305-00-068-0502	124	10
		5305-00-068-0502	125	10
		5305-00-068-0502	141	14
		5305-00-068-0502	155	2
		5305-00-068-0502	180	19
		5305-00-068-0502	203	11
		5305-00-068-0502	206	4
		5305-00-068-0502	208	14
		5305-00-068-0502	241	3
		5305-00-068-0502	244	16
		5305-00-068-0502	245	20
		5305-00-068-0502	250	16
		5305-00-068-0502	251	21
		5305-00-068-0502	252	1
		5305-00-068-0502	253	1
		5305-00-068-0502	254	1
		5305-00-068-0502	255	1
		5305-00-068-0502	267	9
		5305-00-068-0502	269	11
		5305-00-068-0502	270	5
		5305-00-068-0502	294	4
		5305-00-068-0502	311	2
		5305-00-068-0502	313	9
		5305-00-068-0502	331	25
		5305-00-068-0502	333	9
		5305-00-068-0502	338	30
		5305-00-068-0502	339	28
		5305-00-068-0502	342	4
		5305-00-068-0502	343	14
		5305-00-068-0502	377	1
		5305-00-068-0502	384	13
		5305-00-068-0502	393	7
		5305-00-068-0502	395	19
		5305-00-068-0502	399	13
		5305-00-068-0502	410	30
		5305-00-068-0502	412	11
		5305-00-068-0502	416	3
		5305-00-068-0502	421	11
		5305-00-068-0502	422	11
		5305-00-068-0502	440	10
		5305-00-068-0502	484	5
		5305-00-068-0502	492	9
		5305-00-068-0502	494	5
		5305-00-068-0502	495	11
		5305-00-068-0502	496	9

CROSS REFERENCE INDEXES

PART NUMBER INDEX

CAGE	PART NUMBER	STOCK NUMBER	FIGURE NO	ITEM NO
		5305-00-068-0502	497	5
		5305-00-068-0502	498	17
80205	MS90725-94	5305-00-069-5578	398	3
96906	MS90726-162	5305-00-727-2283	437	8
80205	MS90726-34	5306-00-225-9089	280	45
		5306-00-225-9089	281	45
80205	MS90726-42	5306-00-225-9097	392	3
96906	MS90727-116	5305-00-719-5239	397	8
		5305-00-719-5239	437	12
96906	MS90727-84	5305-00-709-8283	234	19
80204	MS90728-7	5305-00-071-2505	418	1
		5305-00-071-2505	420	9
		5305-00-071-2505	421	3
		5305-00-071-2505	422	5
		5305-00-071-2505	423	12
28666	MT161A	5330-01-282-2213	277	10
55719	MT95	4910-01-231-3671	499	7
19728	MZ-294		45	57
68505	MZ-414S	5310-01-214-7784	45	44
02697	N1173 2-015	5331-01-495-4814	490A	2
76761	N1602-1	2920-01-466-1855	476	7
76761	N3135	2920-01-483-2291	40	46
		2920-01-483-2291	43B	34
03538	N405P42C12	5310-00-407-9566	176A	3
76761	N7309	6115-01-349-5320	40	5
76761	N7312	2920-01-363-5173	40	2
76761	N7346		40	9
76761	N7347		40	11
76761	N7348		40	18
76761	N7370	4140-01-350-0839	40	41
76761	N7398		43B	17
76761	N7399		43B	29
76761	N7400		43B	27
76761	N7401	2920-01-399-0794	43B	43
76761	N7402		43B	25
76761	N7433		43B	17
76761	N7434		40	18
09817	N80P21012Q90	5305-00-988-1725	88	31
76761	N9005	5305-01-032-4165	40	16
		5305-01-032-4165	43B	5
76761	N9008	5325-01-032-4222	40	13
76761	N9009	5325-01-034-2757	40	15
76761	N9010	3110-01-037-4661	40	14
76761	N9015	5310-01-046-0186	40	37
76761	N9016	5310-01-032-4169	40	47
76761	N9018	5310-01-032-4827	40	48
76761	N9062	5310-01-232-1363	43B	9
76761	N9063	5310-01-050-6565	40	6
		5310-01-050-6565	43B	39

CROSS REFERENCE INDEXES

PART NUMBER INDEX

CAGE	PART NUMBER	STOCK NUMBER	FIGURE NO	ITEM NO
76761	N9077	5306-01-223-4345	40	39
76761	N9092	5310-01-390-5105	43B	40
76761	N9098	5310-01-225-0701	40	3
76761	N9099	5310-01-165-1312	40	8
		5310-01-165-1312	43B	28
76761	N9256	5325-01-136-4880	43B	21
76761	N9260	5325-01-136-7662	40	12
		5325-01-136-7662	43B	19
76761	N9265	5310-01-136-4888	40	17
		5310-01-136-4888	43B	6
76761	N9269	5365-01-225-0844	40	35
76761	N9318	5999-01-348-0302	40	19
76761	N9331	5310-01-232-1361	40	30
76761	N9338	5310-01-232-1362	40	40
76761	N9343	5310-01-232-6617	43B	8
76761	N9385	3110-01-348-4867	40	10
		3110-01-348-4867	43B	33
76761	N9393	5310-01-348-8384	40	43
76761	N9406	5310-01-362-6171	43B	10
76761	N9408	5310-01-348-8386	40	33
76761	N9410	5310-01-348-8398	40	51
		5310-01-348-8398	43B	13
76761	N9414	5920-01-348-0303	40	32
76761	N9416	5310-01-348-8360	40	44
		5310-01-348-8360	43B	2
76761	N9417	3120-01-348-3364	40	20
76761	N9420	5970-01-350-5646	40	31
76761	N9426	5310-01-348-8313	40	38
76761	N9451	5315-01-348-6880	40	45
76761	N9452		40	4
76761	N9453	5310-01-348-8314	40	28
76761	N9455	5310-01-348-8385	40	36
76761	N9457	5306-01-348-8310	40	24
76761	N9459	5310-01-348-8393	40	25
76761	N9460	5365-01-348-6971	40	34
76761	N9461	5310-01-348-8392	40	29
76761	N9464	5975-01-350-1987	40	21
		5975-01-350-1987	43B	37
76761	N9465	5310-01-350-8549	40	23
		5310-01-350-8549	43B	36
76761	N9467	5310-01-350-4257	40	22
		5310-01-350-4257	43B	46
76761	N9486	3130-01-396-8388	43B	20
76761	N9491	4140-01-397-2228	43B	38
76761	N9492	3120-01-424-1525	43B	4
76761	N9493	5340-01-396-3950	43B	7
76761	N9494	5325-01-396-4320	43B	18
76761	N9500	5975-01-358-0021	40	27
76761	N9502	2920-01-475-3180	40	19

CROSS REFERENCE INDEXES

PART NUMBER INDEX

CAGE	PART NUMBER	STOCK NUMBER	FIGURE NO	ITEM NO
76761	N9545	3120-01-424-1028	43B	44
80205	NAS-1635-3LE12	5305-01-117-3396	376	9
80205	NAS1080R06	5320-01-075-0367	197	20
80205	NAS1080R08	5320-01-044-7545	199	28
80205	NAS1149F0863P	5310-01-396-8392	270	23
80205	NAS1329A3B80	5310-00-811-0966	291	4
		5310-00-811-0966	297	4
80205	NAS1329A3K280	5310-00-682-0775	257	6
80205	NAS1329A4B60	5310-01-481-4029	291	5
		5310-01-481-4029	297	8
80205	NAS1330A3-116	5310-00-964-7092	215	4
80205	NAS1387-4	5940-00-113-9420	485	3
81343	NAS1464-050-10T	5340-01-450-8693	487	4
80205	NAS1635-3-12P	5305-00-442-7347	40	49
80205	NAS1635-3LE12	5305-01-117-3396	321	10
		5305-01-117-3396	325	12
80205	NAS1831A6E28	5340-01-248-2878	59	15
80205	NAS1922-0150	4730-01-322-9160	302	4
80205	NAS1922-0150-1	4730-01-322-9160	305	6
		4730-01-322-9160	306	4
		4730-01-322-9160	309	5
80205	NAS387-832-12P	5305-01-035-8766	74	14
80205	NAS453-10K75	5310-00-550-4725	256	7
80205	NAS561C4-18	5315-00-559-7467	99	13
80205	NAS601-12P	5305-00-813-2785	375	10
		5305-00-813-2785	375	25
80205	NAS9301BNS-4-04	5320-01-143-5079	208	10
		5320-01-143-5079	220	1
		5320-01-143-5079	231	29
		5320-01-143-5079	369	15
80205	NAS9301BNS-6-02	5320-01-143-5075	208	13
80205	NAS9301BNS-6-03	5320-01-135-7319	278	1
		5320-01-135-7319	291	6
		5320-01-135-7319	366	26
		5320-01-135-7319	368	5
		5320-01-135-7319	369	8
		5320-01-135-7319	379	21
80205	NAS9301BNS-6-04	5320-01-136-1782	64	2
		5320-01-136-1782	229	5
		5320-01-136-1782	238	11
80205	NAS9301BNS-6-06	5320-01-084-9234	258	9
		5320-01-084-9234	259	1
80205	NAS9301BNS-6-07	5320-01-085-9995	293	32
80205	NAS9302BNS-6-05	5320-01-136-1787	290	5
80205	NAS9302BNS-6-06	5320-01-086-1148	219	3
		5320-01-086-1148	287	13
		5320-01-086-1148	290	3
80205	NAS9303B-6-03	5320-01-354-2547	220	5
80205	NAS9303B-6-04	5320-01-470-1545	197	16

CROSS REFERENCE INDEXES

PART NUMBER INDEX

CAGE	PART NUMBER	STOCK NUMBER	FIGURE NO	ITEM NO
80205	NAS9303B-6-06	5320-01-407-6239	197	16
81348	NN-P-530	5330-00-262-8195	BULK	48
60380	NTA2435	3110-00-580-3843	128	38
21335	NTA2840	3110-00-756-2022	128	44
06968	ORD-112	5330-01-197-8298	268	15
		5330-01-197-8298	295	6
73165	OS34400	5330-01-310-6780	4	27
9G287	P-100	2530-00-848-4581	167	12
9G287	P-450	6670-01-261-6847	167	12
9G287	P-500	6670-01-262-8647	167	12
9G287	P-550	6670-01-263-2268	167	12
21335	P207K	3110-00-155-6152	148	13
65035	P49866-11	5310-00-637-9541	206	22
61424	P4EUB-4	4730-01-298-4363	401	3
81755	P5006-4G	4020-00-246-0688	BULK	3
81755	P5006-4G-9		72	11
			72	22
			73	8
18631	PDG6120-1/8-1-1/4	5315-00-187-9384	458	48
70040	PF1218	4330-01-398-8484	6	7
61424	PFT-6B	4720-01-169-9891	BULK	19
61424	PFT-88-BLK-100	4720-01-003-6706	BULK	20
00198	PK379	5315-00-816-1794	165	7
		5315-00-816-1794	166	7
16941	PL25D02P12	5305-01-210-6249	321	1
16941	PL25D040P12	5305-01-198-3385	323	2
		5305-01-198-3385	323	7
		5305-01-198-3385	324	22
		5305-01-198-3385	324	34
		5305-01-198-3385	326	2
16941	PL25D040P8	5305-01-206-7217	324	21
		5305-01-206-7217	324	33
		5305-01-206-7217	375	20
16941	PL25J02P12	5305-01-199-3371	266	13
		5305-01-199-3371	317	9
		5305-01-199-3371	318	5
16941	PL25J02P20	5305-01-198-1619	324	11
		5305-01-198-1619	324	25
		5305-01-198-1619	375	16
18876	PMS90727001-06	5306-00-068-0513	66A	3
80063	PPL-10323	5820-01-222-1107	414	KIT
80063	PPL-10324	5820-01-222-1106	416	KIT
68505	PS-1475SS	2920-01-290-9245	45	17
82647	PSA-25	5925-01-373-1034	367	12
58727	PT1	5640-00-555-3011	467	12
77445	PWA10132-3	5310-00-225-6993	188	32
76700	Q186245	5340-01-506-1892	176A	9
76700	Q206141	5340-01-505-9463	176A	8

CROSS REFERENCE INDEXES

PART NUMBER INDEX

CAGE	PART NUMBER	STOCK NUMBER	FIGURE NO	ITEM NO
76700	Q348148	4730-01-506-3179	176A	6
76700	Q63330		176A	11
76700	Q79699	5330-01-505-7214	176A	10
76700	Q79869	5331-01-380-2118	176A	13
76700	Q79870	5331-01-505-7218	176A	7
21335	QAR29523	3110-00-689-4076	128	2
77252	QR816	5310-00-007-1607	283	12
09094	QRP3C0855	5315-01-197-7563	275	8
71843	R-2423-A	2510-01-264-6546	211	13
		2510-01-264-6546	212	14
26051	R-451-N	5330-01-041-9721	BULK	5
81343	R-495-T		BULK	56
35510	R027100150		39	35
35510	R055102143	5998-01-147-7895	39	74
83065	RB1450-1-4IDX1-2 0D	4720-00-684-4033	BULK	18
0ALB6	RC01A008-07-05	4730-01-455-1231	466	3
		4730-01-455-1231	467	2
0ALB6	RC01A009-07-04	4730-01-455-1259	466	2
0ALB6	RC01A010-07-08	4730-01-455-1276	466	1
01276	RC01C-008	4820-01-461-1703	466	6
0ALB6	RC01C-009	4820-01-455-5021	466	8
0ALB6	RC01D007-07-04	4730-01-455-1220	467	3
34623	RCSK-18685	3020-01-444-5447	38	8
34623	RCSK17028-1	2520-01-421-4589	146	1
34623	RCSK17028-2	2520-01-423-1947	139	1
34623	RCSK17028-3	2520-01-421-4588	139	1
34623	RCSK17089-1	2530-01-420-7892	152	6
34623	RCSK17089-2	2530-01-420-7893	152	6
34623	RCSK17123	5340-01-433-2743	183	21
34623	RCSK17176	2510-01-433-4421	183	12
34623	RCSK17215	2530-01-420-8025	KITS	10
34623	RCSK17250	2530-01-420-7895	144	20
			152	20
34623	RCSK17805		160	4
34623	RCSK18121	4710-01-473-2352	333	7
34623	RCSK18220	3020-01-473-2048	36	8
34623	RCSK18221	3020-01-442-7278	34	22
34623	RCSK18268	2920-01-444-2749	38	11
34623	RCSK18278-6	2590-01-444-3317	33	9
34623	RCSK18330	2530-01-460-2439	174	5
		2530-01-460-2439	175	1
34623	RCSK18375	2990-01-411-3954	24	5
34623	RCSK18434-2	4720-01-442-9875	160	1
		4720-01-442-9875	487A	3
34623	RCSK18434-3	4720-01-443-3033	160	16
		4720-01-443-3033	487A	2
34623	RCSK18435-2	4720-01-443-8487	162	25
		4720-01-443-8487	487A	16
34623	RCSK18435-3	4720-01-443-3481	162	9

CROSS REFERENCE INDEXES

PART NUMBER INDEX

CAGE	PART NUMBER	STOCK NUMBER	FIGURE NO	ITEM NO
		4720-01-443-3481	487A	15
34623	RCSK18531	5340-01-476-2963	188	26
34623	RCSK18532	5340-01-476-2972	188	36
34623	RCSK18596	5340-01-476-5072	188	30
34623	RCSK18626	3020-01-458-0176	33	5
		3020-01-458-0176	33A	5
34623	RCSK18627	3020-01-458-0185	33	3
34623	RCSK18628	3020-01-462-1202	33	4
34623	RCSK18639	5330-01-476-9732	180	22
34623	RCSK18683	5365-01-480-5282	33	19
34623	RCSK18686	3020-01-444-2311	175	3
34623	RCSK18747-1	5340-01-476-2845	188	33
34623	RCSK18747-2	5340-01-476-2840	188	33
34623	RCSK18809	2510-01-477-3968	180	24
34623	RCSK19027	5305-01-477-1867	180	25
34623	RCSK19361	5340-01-488-6185	176A	4
27182	RD-860066	5342-01-266-5689	211	2
01276	RE01-0001-0720	4720-01-458-3326	466	10
01276	RE01-0003-0720		466	7
01276	REO1-0002-0720	4720-01-456-6674	466	5
01276	REO1-0003-0360	4720-01-456-6729	466	9
14429	RESINITEEP69C	5970-00-221-5301	44	20
		5970-00-221-5301	69	21
		5970-00-221-5301	69	26
		5970-00-221-5301	72	5
		5970-00-221-5301	313	17
81348	RR-C-271-6		191	19
33287	RS-3400-135		505	10
33287	RS-5700-125		505	13
33287	RS-5701-795		505	12
53551	RV817	5130-01-045-3507	504	13
53551	RV818	5130-01-044-7196	504	12
82484	S-3076	3120-01-432-1474	327	7
82484	S-3087	3120-01-388-1527	327	8
03481	S10P196	5310-01-210-7935	224	6
25472	S10P320	5310-01-197-6253	254	26
		5310-01-197-6253	287	6
70318	S147-1	5310-00-933-8118	282	15
76385	S1608	5325-00-174-9038	70	1
0VK23	S25P296	5310-01-496-0115	327	49
03481	S31P280	5310-01-198-1724	197	4
		5310-01-198-1724	417	8
		5310-01-198-1724	430	18
27182	S4501XRXBZXX	5342-01-266-7559	289	8
27914	S45043-3405	5310-00-934-9748	282	16
27182	S450XXLXBZXX	5342-01-265-1129	293	27
25472	S4P90	5310-01-388-7420	274	19
72794	S7-250	5325-00-449-3001	208	5
53964	SA609010	5305-01-190-4073	19	2

CROSS REFERENCE INDEXES

PART NUMBER INDEX

CAGE	PART NUMBER	STOCK NUMBER	FIGURE NO	ITEM NO
9D117	SAEJ562		480	20
9D117	SAEJ562/3/4		474	14
19728	SAT-1004F		45	31
68505	SAT-1004FS	2920-01-192-4474	KITS	11
19728	SAT-1014B		45	35
19728	SAT-32	5330-00-193-0850	45	32
19728	SAT-40		45	37
19728	SAT-46		45	28
19728	SAT-47		45	26
19728	SAT-48		45	24
19728	SAT-52		45	25
68505	SAT4108UT	5945-01-210-1299	45	20
68505	SAV-1008A	2920-01-184-1054	45	21
28520	SB-750-625-2840	5975-01-211-3142	17	13
		5975-01-211-3142	153	18
		5975-01-211-3142	379	48
63728	SC202494	5330-01-393-9101	9	2
53964	SC220072	4330-01-280-8417	19	7
99587	SC300079		19	5
53964	SC300081		19	9
80063	SCD13617-8	5310-00-809-5998	33	2
27737	SCE-2012	3110-01-155-9862	128	37
27737	SCE-2416	3110-01-155-4440	128	1
2L480	SD1130	9330-00-065-8682	BULK	1
34623	SF-5583585		99	10
34623	SF-5590748	2510-01-203-9873	278	14
34623	SF-5595841	2510-01-252-4466	227	10
9C234	SF-5597234	4730-01-265-3166	302	10
34623	SF-5597692	5640-01-309-3866	200	4
34623	SF-5597693	5640-01-309-3870	200	3
34623	SF-5597695	2530-01-285-8381	169	23
34623	SF5575898		71	7
34623	SF5575925	5330-01-197-3620	208	31
34623	SF5581351	2510-01-189-3460	320	5
		2510-01-189-3460	324	10
34623	SF5581723	2510-01-197-5546	375	12
		2510-01-197-5546	378	11
34623	SF5581724	2510-01-197-5547	375	12
		2510-01-197-5547	378	11
34623	SF5585243		327	47
34623	SF5585258		327	22
34623	SF5589377	2540-01-276-5928	289	11
34623	SF5590706		225	17
			226	7
17168	SF5592171	2540-01-265-1137	224	11
34623	SF5597161	2510-01-281-1032	228	6
34623	SF5597214		304	10
			309	8
34623	SF5597216		305	10

CROSS REFERENCE INDEXES

PART NUMBER INDEX

CAGE	PART NUMBER	STOCK NUMBER	FIGURE NO	ITEM NO
34623	SF5597218		309	3
34623	SF5597219		309	7
34623	SF5597221		309	13
34623	SF5597226		310	1
34623	SF5597227		309	12
34623	SF5597229		306	2
34623	SF5597230		306	7
34623	SF5597231		306	10
34623	SF5597232	4710-01-270-9617	310	3
34623	SF5597426	2540-01-270-6537	236	3
34623	SF5597431	2540-01-270-6538	236	4
34623	SF5597606	2540-01-271-2832	290	2
34623	SF5597721	4730-01-270-7931	301	8
34623	SF5597723	4720-01-270-2226	304	4
34623	SF5597725	4710-01-272-7565	302	2
34623	SF5597744	4730-01-265-3284	302	5
		4730-01-265-3284	305	7
34623	SF5597958		302	9
303	2			
34623	SF5597970		310	9
34623	SF5598132	4710-01-272-0513	302	11
34623	SF5598133	4710-01-271-6957	302	12
34623	SF5598134		302	7
			305	9
34623	SF5934157	9330-01-276-1470	287	8
34623	SF5934158	2540-01-270-6459	219	5
		2540-01-270-6459	290	7
34623	SF5934173	5340-01-270-8432	260	18
34623	SF5934182	5330-01-265-8808	213	32
34623	SF5934196	5340-01-271-1846	211	22
		5340-01-271-1846	212	20
34623	SF5934202	4720-01-270-9616	303	7
66295	SIZE 83	4730-01-092-1904	332	9
66295	SIZE83	4730-01-092-1904	331	2
62915	SK-11002-6	5306-00-225-8503	329	8
00334	SK2155	6685-00-618-1822	363	28
53421	SNP-22	4730-01-239-5251	301	3
		4730-01-239-5251	303	12
7Z588	SP-311	2590-01-212-5868	488	1
08484	SP1548-1	5310-00-112-2233	39	12
01428	SPM-4	3120-01-154-6272	487	12
55719	SRES18	5120-01-367-3582	505	2
55719	SRES24	5120-01-367-3585	505	2
19728	SS-88A		45	36
08718	SS2R-120-1804-00 0	5935-01-149-5165	79	6
08718	SS4R-120-1806-00 0	5935-01-154-6233	79	5
8J942	SSLQ-68	5320-01-255-6608	202	4

CROSS REFERENCE INDEXES

PART NUMBER INDEX

CAGE	PART NUMBER	STOCK NUMBER	FIGURE NO	ITEM NO
11815	SSPS-04-03	5320-01-221-4231	274	30
06383	SST1M-C0	5975-00-903-2284	98	6
17875	T-18	2640-00-555-2834	167	11
06481	T-218758	4730-00-908-6293	387	2
		4730-00-908-6293	393	16
74410	T-60-A0S-L	2540-01-189-2193	191	8
83553	T048-270-250L	5360-01-101-2143	245	13
28666	T2H2-38P2	3110-01-457-9711	277	9
53421	T30MR-0	5975-01-299-7781	52	7
		5975-01-299-7781	57	6
59875	TD97203	5325-00-263-6651	79	25
56501	TG11	5940-00-705-6711	75	16
		5940-00-705-6711	76	16
		5940-00-705-6711	80	4
		5940-00-705-6711	81	18
		5940-00-705-6711	83	1
		5940-00-705-6711	86	36
56501	TG14	5940-00-705-6714	75	2
56501	TG15	5940-00-705-6715	75	15
		5940-00-705-6715	76	15
56501	TG2	5940-00-705-6702	86	35
56501	TG3	5940-00-705-6703	75	17
		5940-00-705-6703	76	17
		5940-00-705-6703	93	10
56501	TG33	5940-00-735-5520	41	10
		5940-00-735-5520	44	13
		5940-00-735-5520	44	19
		5940-00-735-5520	44	24
		5940-00-735-5520	72	16
		5940-00-735-5520	73	25
		5940-00-735-5520	474	11
		5940-00-735-5520	480	26
56501	TG8	5940-00-705-6708	75	7
		5940-00-705-6708	76	10
		5940-00-705-6708	80	6
		5940-00-705-6708	83	4
		5940-00-705-6708	85	21
		5940-00-705-6708	86	14
		5940-00-705-6708	87	3
56501	TG9	5940-00-705-6709	76	5
		5940-00-705-6709	85	30
		5940-00-705-6709	86	20
		5940-00-705-6709	89	6
55719	TLE60	5120-01-227-3159	505	3
60380	TRA 2840	3110-00-055-2100	128	45
09527	TS6058	6620-01-194-6586	66	11
71124	TURB0LEX76B	5970-00-221-5301	69	12
		5970-00-221-5301	72	17
96508	TW6B	5120-00-683-8597	505	5

CROSS REFERENCE INDEXES

PART NUMBER INDEX

CAGE	PART NUMBER	STOCK NUMBER	FIGURE NO	ITEM NO
56501	TY25M0	5975-00-984-6582	470	7
81348	TYIV/CL1/TRVC8	2640-01-098-2029	167	21
81348	TYV/CL2/TR C1	2640-00-050-1229	167	22
14557	U-6236	5340-01-197-8239	269	25
92830	U500-0113	5310-01-105-9398	293	8
59199	UM5008	4730-00-954-1251	141	10
		4730-00-954-1251	399	16
62161	VF0010	2640-01-419-6202	167	17
68505	VSF-16	5310-01-214-7785	43	30
80604	W-129-B	4910-00-105-2823	502	6
78940	W-250D53	2940-01-188-3776	12	25
99017	W-4	5340-01-242-6245	235	14
99017	W-5	5340-01-255-1657	203	24
79470	W21204	4730-00-897-5497	178	20
		4730-00-897-5497	334	12
		4730-00-897-5497	366	10
		4730-00-897-5497	385	11
27647	W6000HMV	2590-01-179-7602	313	12
		2590-01-179-7602	443	15
08484	WA-1429-10	5305-00-984-6210	299	1
		5305-00-984-6210	430	7
34623	WA12338230	2510-01-466-3752	182	11
81348	WW-C-440B TYPE E 1/2	4730-00-267-8945	401	2
81348	WW-P-471ACABCB	4730-00-954-1281	5	1
		4730-00-954-1281	436	4
81349	WW-P-471ACABUA	4730-01-166-2244	105	11
81349	WW-P-471AQABUA	4730-01-166-2244	104	3
66295	WWD48-58H	4730-00-908-3193	364	3
19728	X-3508		45	33
19728	X-3925SC		45	62
19728	X-4059		43	19
19728	X-4070		43	12
80293	X-4071		43	17
19728	X-4328		43	21
81348	X/GP3/TYRA/CL0/0 /37-12.50R16.50/	2610-01-333-7632	168	1
63829	X10		491	3
63829	X11		491	6
63829	X12		491	25
63829	X13		491	27
63829	X14		491	14
63829	X15		491	15
63829	X16		491	16
63829	X17		491	18
63829	X18		491	13
14351	X601	5315-00-842-3044	97	6
		5315-00-842-3044	99	18
		5315-00-842-3044	133	9

CROSS REFERENCE INDEXES

PART NUMBER INDEX

CAGE	PART NUMBER	STOCK NUMBER	FIGURE NO	ITEM NO
		5315-00-842-3044	153	13
		5315-00-842-3044	202	39
		5315-00-842-3044	205	21
41885	X91430	5306-01-417-2467	167	15
19728	XA-1316		43	7
			43	13
19728	XA-1317		43	16
68505	XA-1642	5330-01-209-7669	45	3
19728	XA-744AP		45	52
19728	XA-744AV		43	8
68505	XA-744AV	5331-00-078-0265	43	22
19728	XA-744AW		43	24
19728	XA-744AY		43	10
19728	XA-744Z	5331-00-137-3450	45	9
78553	XAN-262-H	5325-01-166-6324	128	74
13940	XB78323-05001	5325-00-823-5999	198	2
		5325-00-823-5999	199	11
		5325-00-823-5999	225	23
		5325-00-823-5999	239	9
		5325-00-823-5999	317	7
		5325-00-823-5999	318	11
		5325-00-823-5999	321	8
		5325-00-823-5999	325	19
		5325-00-823-5999	373	6
		5325-00-823-5999	376	7
		5325-00-823-5999	376	11
63829	XX1		491	2
63829	XX3		491	21
63829	XX4		491	20
63829	XX5		491	19
63829	XX6		491	5
63829	XX7		491	7
63829	XX8		491	12
63829	XX9		491	11
78462	Y797-ABIFE-1 1/2 CP60	4820-01-455-5020	467	8
35510	Z0982-75723	5310-01-143-1679	39	45
35510	Z106005179	5305-00-777-2284	39	57
35510	Z116 096169	5920-01-275-8096	39	58
35510	Z116095517	5305-01-147-5864	39	52
76385	ZB-1079M.I.	5340-01-203-8675	280	17
		5340-01-203-8675	281	17
76385	ZX-2024	5330-01-275-3381	296	8
76385	ZX-4597	9390-01-282-9949	296	7
77820	10-40817-010	5935-00-772-2344	85	13
		5935-00-772-2344	86	18
77820	10-42622-235	5935-00-614-3959	80	7
		5935-00-614-3959	85	7
81834	10-7005-06	6695-01-216-8687	64	9

CROSS REFERENCE INDEXES

PART NUMBER INDEX

CAGE	PART NUMBER	STOCK NUMBER	FIGURE NO	ITEM NO
35510	100204	6150-01-269-1857	39	46
35510	100209	6150-01-335-3087	39	79
35510	100210	5340-01-270-8484	39	49
35510	100212	5340-01-272-2677	39	34
24975	100276	5330-01-272-7454	39	4
7X677	10054241	5330-01-096-7699	78	2
98853	100828-HN37	5940-01-443-9580	95	4
54905	10084	5340-01-426-3850	307	14
		5340-01-426-3850	308	2
91094	100951-D02	5940-01-269-1816	89	4
70898	100951X031-012-028	5310-00-641-9464	251	5
7X677	10137486	5330-01-150-5944	10	1
7X677	10137488	5330-01-149-0874	30	12
7X677	10137492	5330-01-147-9808	31	4
28891	101450-S02	5940-01-214-4563	79	10
7X677	10149551	4710-01-314-4489	11	30
7X677	10149552	4710-01-314-4483	11	10
7X677	10149553	4710-01-314-4488	11	28
7X677	10149554	4710-01-316-0222	11	11
7X677	10149555	4710-01-314-4487	11	18
7X677	10149556	4710-01-314-4485	11	16
7X677	10149557	4710-01-314-4486	11	24
7X677	10149558	4710-01-314-4484	11	17
7X677	10154669	4710-01-493-1712	11	30
60602	10166	5315-01-284-9812	21	13
7X677	10183956	4730-01-445-2358	30	15
		4730-01-445-2358	30	17
7X677	10183996		11	23
18876	10189683	5315-00-255-5580	268	6
7X677	10191497	5340-01-493-2555	11	32
19207	10192299	5340-01-197-2717	268	7
19207	10192302	5340-01-197-1444	268	12
18876	10224818	5325-00-886-1067	247	8
7X677	10225180	5340-01-493-2538	11	31
7X677	10243629		30	14
7X677	103384	5315-01-191-2611	133	4
34281	103700-01	2530-01-204-2583	158	2
34281	103700-02	2530-01-207-6256	158	2
34281	103700-09	2530-01-484-9574	158	2
34281	103700-10	2530-01-484-9573	158	2
34281	103706-05		158	7
34281	103706-06		158	7
34281	103706-07		158	7
34281	103706-08		158	7
34281	10371009	2530-01-185-6714	158	9
34281	103712-01	2530-01-185-7998	157	14
		2530-01-185-7998	158	10
70655	10392	5315-01-280-6185	230	9

CROSS REFERENCE INDEXES

PART NUMBER INDEX

CAGE	PART NUMBER	STOCK NUMBER	FIGURE NO	ITEM NO
		5315-01-280-6185	287	23
22075	10453002	2530-01-314-1129	157	22
		2530-01-314-1129	158	12
34281	104534-01	2530-01-185-6713	157	20
		2530-01-185-6713	158	15
7X677	10478147	5950-01-480-5380	119	13
7X677	10478148	5950-01-480-5377	119	11
7X677	10483630	5331-01-494-2431	119	32
34281	104870-01	2530-01-179-7511	KITS	14
7X677	104918		119	7
56161	1051759	5305-01-159-0065	175A	11
78385	10530A24	2540-00-113-4180	348	1
7X677	105455	5330-01-155-4393	128	70
68505	105651	6220-00-880-1624	60	4
18876	10579085-1	4010-00-224-482	BULK	49
60602	10618		21	12
01989	1062X6X4	4730-01-184-4760	141	25
27767	106397-03	2530-01-253-2825	157	16
		2530-01-253-2825	158	11
33116	106397-04		157	16
			158	11
79470	1064X4	4730-01-003-5105	123	4
		4730-01-003-5105	141	23
		4730-01-003-5105	149	12
		4730-01-003-5105	313	8
		4730-01-003-5105	399	6
		4730-01-003-5105	443	10
		4730-01-003-5105	457	2
79470	1064X6X6X4	4730-01-476-0850	13	13
		4730-01-476-0850	14	19
79470	1065X4	4730-01-058-0900	149	11
01989	1065X6	4730-01-211-0896	18	7
01989	1068X4	4730-01-185-5348	12	41
		4730-01-185-5348	135	3
		4730-01-185-5348	141	26
		4730-01-185-5348	149	14
		4730-01-185-5348	399	4
34281	106980-02	2530-01-185-6712	157	23
		2530-01-185-6712	158	13
01989	1069X4	4730-01-070-7680	12	40
		4730-01-070-7680	399	3
01989	1069X4X1	4730-01-195-3803	400	7
79470	1069X6	4730-00-041-2526	30	19
01989	1077X4	4730-01-192-8086	141	19
34281	108037-01	5365-01-186-7233	158	3
34281	108039-01	3120-01-186-7181	158	4
58538	10812	4010-01-203-0412	270	4
7X677	108597	5306-01-164-8486	118	9
19207	10886344-3	4720-00-005-5008	385	3

CROSS REFERENCE INDEXES

PART NUMBER INDEX

CAGE	PART NUMBER	STOCK NUMBER	FIGURE NO	ITEM NO
19207	10896651	9905-01-032-7002	394	4
51377	1090-06404-01	2930-01-168-7870	34	2
15434	109155	5315-00-839-2325	21	19
		5315-00-839-2325	21	29
19207	10918603	5310-00-877-5975	398	9
19207	10929868	2920-00-909-2483	35	6
34281	109413-01	4820-01-186-0822	159	2
34821	109433-01		157	6
34281	109457-01	5305-01-276-4855	157	1
19207	10948233	5930-00-679-5925	345	15
		5930-00-679-5925	348	38
19207	10948235	5330-00-089-0978	345	20
96881	10L18F	3120-01-191-3232	99	23
		3120-01-191-3232	133	8
79470	110-03604	4730-00-789-0951	177	3
		4730-00-789-0951	178	1
24617	110200	4730-00-266-0536	366	12
81100	110401-8SS	5310-00-933-8119	482	18
72582	111625	4730-00-142-2010	125	20
17773	11176106-5	5340-00-150-1658	83	23
		5340-00-150-1658	488	10
62161	1118BAC1048		505	8
01989	112-06136	4730-01-184-6971	159	8
		4730-01-184-6971	161	9
78189	112-1008800-003	5305-01-204-6502	25	5
		5305-01-204-6502	51	6
		5305-01-204-6502	83	6
		5305-01-204-6502	335	6
19207	112446825	6150-01-416-7899	41	6
		6150-01-416-7899	70	12
29510	1125218C1	4720-00-065-8682	BULK	17
52304	113324	5305-00-071-2069	283	5
		5305-00-071-2069	417	16
45152	114356A	5310-00-061-4650	103	6
18876	11459081	8315-01-115-7617	BULK	4
24617	11500161	5310-01-416-5447	101	6
7X677	11500177	5310-01-185-7218	138	19
		5310-01-185-7218	139	17
		5310-01-185-7218	145	19
		5310-01-185-7218	146	17
7X677	11500207	5310-01-206-7306	1	4
		5310-01-206-7306	2	5
		5310-01-206-7306	12	19
		5310-01-206-7306	30	8
		5310-01-206-7306	33	11
		5310-01-206-7306	35	26
		5310-01-206-7306	36	19
		5310-01-206-7306	37	14
		5310-01-206-7306	38	19

CROSS REFERENCE INDEXES

PART NUMBER INDEX

CAGE	PART NUMBER	STOCK NUMBER	FIGURE NO	ITEM NO
		5310-01-206-7306	41	12
		5310-01-206-7306	42	10
		5310-01-206-7306	66	7
		5310-01-206-7306	75	31
		5310-01-206-7306	77	9
		5310-01-206-7306	174	2
		5310-01-206-7306	33A	9
		5310-01-206-7306	364	6
		5310-01-206-7306	379	37
		5310-01-206-7306	472	2
		5310-01-206-7306	473	10
		5310-01-206-7306	474	4
		5310-01-206-7306	475	14
		5310-01-206-7306	476	16
		5310-01-206-7306	480	8
		5310-01-206-7306	490	7
		5310-01-206-7306	490A	6
7X677	11500256	5310-01-210-1587	37	13
		5310-01-210-1587	472	3
		5310-01-210-1587	473	11
		5310-01-210-1587	474	3
		5310-01-210-1587	475	16
		5310-01-210-1587	476	22
24617	11500324	5310-01-204-6745	490	12
24617	11500362	5310-01-394-9280	370	10
24617	11500749	5310-01-165-3331	4	30
		5310-01-165-3331	7	8
		5310-01-165-3331	11	26
7X677	11500815	5305-01-149-1938	31	8
7X677	11500827	5305-01-254-2521	174	9
		5305-01-254-2521	66A	1
24617	11500831	5306-01-165-4283	128	23
		5306-01-165-4283	130	19
7X677	11500921	5306-01-150-1190	31	12
		5306-01-150-1190	122	33
7X677	11501032	5310-01-186-1254	1	3
24617	11501086	5310-01-504-5729	490A	9
24617	11501619	5306-01-473-1895	33	10
7X677	11501940	5306-01-206-7172	66	8
		5306-01-206-7172	77	24
		5306-01-206-7172	79	18
24617	11503428	5306-01-152-4696	128	21
		5306-01-152-4696	130	21
7X677	11503617	5305-01-150-1521	11	14
7X677	11503639	5310-01-155-2503	10	6
7X677	11503739	5310-01-158-6257	75	36
		5310-01-158-6257	77	17
24617	11503870	5306-01-474-6117	120	18
24617	11503962	5310-01-444-3084	77	16

CROSS REFERENCE INDEXES

PART NUMBER INDEX

CAGE	PART NUMBER	STOCK NUMBER	FIGURE NO	ITEM NO
7X677	11504512	5306-01-148-3667	11	5
24617	11504594	5306-01-447-2568	33	13
7X677	11504596	5306-01-243-4650	175	2
24617	11504617	5306-01-432-7900	33	12
24617	11504726	5975-01-475-3442	227	46
24617	11504986	5306-01-152-4693	22	1
7X677	11504986	5306-01-185-7051	66A	13
7X677	11505074	5306-01-411-2342	101	7
73342	11505328	5305-01-360-1136	33	15
7X677	11505885	5325-01-196-5631	245	8
24617	11505922	5310-01-315-1535	379	38
7X677	11508353	5306-01-253-7073	4	19
7X677	11508534	5306-01-230-3354	4	21
7X677	11508600	5306-01-165-5582	4	12
24617	11508687	5306-01-197-1492	108	1
7X677	11508805		105	10
7X677	11509669	5306-01-151-4925	9	6
24617	1150967	5305-01-149-9673	31	11
7X677	11513606	5306-01-185-7048	1	6
		5306-01-185-7048	103	13
		5306-01-185-7048	138	18
		5306-01-185-7048	139	16
		5306-01-185-7048	145	18
		5306-01-185-7048	146	16
		5306-01-185-7048	175	10
7X677	11513697	5306-01-474-8959	119	10
7X677	11514578	5325-01-480-7331	117	17
7X677	11514603	5310-01-155-2503	7	5
		5310-01-155-2503	75	27
		5310-01-155-2503	101	4
7X677	11515262	5306-01-476-3500	120	16
7X677	11515756	5306-01-465-2140	105	19
7X677	11515763	5305-01-186-5381	103	11
		5305-01-186-5381	105	23
7X677	11516075	5310-01-206-5479	365	18
7X677	11516230	4730-01-444-0701	30	13
19207	11595179	5120-00-880-4268	503	4
7X677	116000	5310-01-187-0678	374	15
34623	11602903	2540-01-317-4289	393	10
		2540-01-317-4289	395	10
19207	11608950-13	4730-00-908-6292	24	2
19207	11608950-18	4730-01-296-9318	337	4
		4730-01-296-9318	398	31
19207	11608950-6	4730-00-278-2523	331	30
19207	11609693-1	2540-00-104-2889	389	2
19207	11609942	5340-01-320-8662	387	11
29930	116103	5330-00-135-6383	105	21
19207	11613631	5945-00-789-3706	49	8
19207	11614131	5930-00-134-5036	46	11

CROSS REFERENCE INDEXES

PART NUMBER INDEX

CAGE	PART NUMBER	STOCK NUMBER	FIGURE NO	ITEM NO
19207	11614131-1		46	16
19207	11630585	9905-01-181-9456	357	3
19207	11639519-1	5331-00-463-0200	60	10
19207	11639519-2	5331-00-462-0907	61	11
19207	11639541		60	5
19207	11639546	6220-00-179-4325	60	9
19207	11643398	9905-00-198-2728	354	2
19207	11644801	7690-00-138-5788	362	1
19207	11655788-2	5120-00-240-8702	505	4
19207	11663000	4730-00-150-6118	11	8
19207	11663057	5930-00-345-5455	345	10
		5930-00-345-5455	348	14
19207	11663058	4810-00-248-1635	348	40
19207	11663061	5905-00-251-7145	348	4
19207	11663279	5930-00-207-9422	51	3
19207	11668591	5935-01-184-6417	85	24
		5935-01-184-6417	86	15
19207	11668932	6220-01-094-1440	62	1
19207	11668979	5310-01-100-2067	62	5
19207	11669531	5935-01-314-2084	380	9
19207	11669705	2540-01-125-6154	388	16
19207	11675004	5340-01-059-0114	72	9
19207	11682088-1	5340-01-114-7712	402	11
24617	117212	5310-00-568-6077	100	12
76760	11797	5306-01-359-4530	130	2
94222	12-11014-12	5310-00-880-9344	216	5
		5310-00-880-9344	221	5
94222	12-12-404-11	5305-01-185-2211	216	8
		5305-01-185-2211	221	4
68505	12-333	2920-01-168-4131	43	27
71468	120-1805-000	5935-01-153-9320	76	13
K5667	1200359	2530-01-491-2681	175A	3
77060	12004436	5940-01-341-7689	93	2
34281	120100-07		157	7
34281	120100-08		157	8
34281	120100-09		157	13
34281	120100-10		157	11
30379	120217	5310-00-922-2017	370	17
		5310-00-922-2017	465	3
		5310-00-922-2017	487	3
72582	120217	5310-00-922-2017	64	15
		5310-00-922-2017	64	25
		5310-00-922-2017	67	3
		5310-00-922-2017	88	42
		5310-00-922-2017	225	49
		5310-00-922-2017	226	29
24617	120367	5310-00-012-0367	370	24
12204	120375	5310-00-584-5005	468	9
24617	120376	5310-00-409-3355	176A	2

CROSS REFERENCE INDEXES

PART NUMBER INDEX

CAGE	PART NUMBER	STOCK NUMBER	FIGURE NO	ITEM NO
79410	120380	5310-00-838-2024	283	15
24617	120384	5310-00-482-9493	33	6
29510	120384	5310-00-011-6121	127	5
		5310-00-011-6121	472	12
		5310-00-011-6121	475	20
		5310-00-011-6121	476	18
		5310-00-011-6121	481	3
24617	120388	5310-00-012-0388	33A	14
		5310-00-012-0388	33B	4
24617	120392	5310-01-103-6042	176A	20
81306	120393	5310-01-308-0131	199	8
21450	120487	4730-00-043-3750	345	34
		4730-00-043-3750	348	34
24617	120528	5340-01-166-1672	25	2
		5340-01-166-1672	103	5
72915	120613	5310-00-297-8836	66A	7
77060	12078084	5935-01-443-9124	86	29
77060	12084912	5940-01-442-6298	86	32
7X677	12143072	6150-01-470-2009	78	1
34281	1215567-01	5340-01-265-8883	157	2
77060	12160490	5935-01-445-5599	86	31
77060	12160494	5935-01-445-5144	86	33
27767	12173601	2530-01-333-8263	157	5
27767	12173602	2530-01-333-6068	157	5
16764	121743	5310-00-012-1743	269	29
34271	121743-01		157	15
7X677	12181688	6150-01-470-2016	78	1
7X677	12181863	6150-01-470-2011	78	1
41024	12214139	5305-01-282-3386	224	9
19207	12255608	5315-01-094-9025	403	11
19207	12258931-2	6680-01-148-8875	66	4
34345	12258932-6	6685-01-167-4298	67	1
19207	12265594	5895-01-050-2072	274	20
19207	12267802	5330-01-080-3253	104	15
19207	12275161	2540-01-123-1218	368	16
19207	12296696-2	5305-01-271-1806	191	13
19207	12298661	5340-01-110-4036	245	28
		5340-01-110-4036	478	5
78500	1229F1514	5310-00-080-6004	30	7
		5310-00-080-6004	41	13
19207	12300715-1	5325-01-175-7442	387	13
19207	12301363-1	2540-01-200-1994	316	9
		2540-01-200-1994	378	17
19207	12301363-2	2540-01-203-7721	316	9
		2540-01-203-7721	320	9
		2540-01-203-7721	324	12
		2540-01-203-7721	375	17
		2540-01-203-7721	378	17
19207	12301365	2540-01-200-1995	316	14

CROSS REFERENCE INDEXES

PART NUMBER INDEX

CAGE	PART NUMBER	STOCK NUMBER	FIGURE NO	ITEM NO
		2540-01-200-1995	320	12
		2540-01-200-1995	320	24
		2540-01-200-1995	324	19
		2540-01-200-1995	324	31
		2540-01-200-1995	375	22
		2540-01-200-1995	378	22
7X677	123153	5310-01-185-4672	137	16
19207	12331924-6		231	10
7X677	12337210	4330-01-121-6350	KITS	15
7X677	12337891	4730-00-166-9178	30	13
7X677	12338062	5310-01-148-2687	129	35
19207	12338064	8145-01-231-3747	363	1
19207	12338065		363	9
19207	12338066		363	4
19207	12338067	5340-01-271-3059	363	7
19207	12338068	5340-01-264-6544	363	6
19207	12338070	5342-01-264-6543	363	22
19207	12338071	5340-01-265-3676	363	18
19207	12338072-1	7690-01-484-4111	357	6
19207	12338073	5330-01-264-6537	363	5
19207	12338074	5340-01-264-6540	363	8
19207	12338078	2520-01-268-1051	363	2
19207	12338084	5325-01-205-5378	339	5
		5325-01-205-5378	410	31
		5325-01-205-5378	412	24
19207	12338085	5325-01-205-3203	410	36
		5325-01-205-3203	412	12
19207	12338086-2	5995-01-269-9525	338	14
19207	12338086-3	5995-01-201-7495	410	1
19207	12338086-4	5995-01-251-9316	414	1
		5995-01-251-9316	416	2
19207	12338089-2	6150-01-269-1848	338	6
		6150-01-269-1848	339	7
19207	12338089-3	5995-01-201-4129	410	2
		5995-01-201-4129	412	2
19201	12338089-4	5995-01-251-6785	416	1
		5995-01-251-6785	428	2
19207	12338092	2590-00-454-3620	93	23
		2590-00-454-3620	96	30
		2590-00-454-3620	338	2
		2590-00-454-3620	339	6
		2590-00-454-3620	410	32
19207	12338095	5310-01-208-7576	410	15
		5310-01-208-7576	414	10
		5310-01-208-7576	416	13
		5310-01-208-7576	425	11
		5310-01-208-7576	426	11
		5310-01-208-7576	427	12
		5310-01-208-7576	428	13

CROSS REFERENCE INDEXES

PART NUMBER INDEX

CAGE	PART NUMBER	STOCK NUMBER	FIGURE NO	ITEM NO
19207	12338098	5325-01-208-5424	410	10
		5325-01-208-5424	414	8
		5325-01-208-5424	416	8
34623	12338099-1	6150-01-207-8120	416	9
		6150-01-207-8120	426	16
		6150-01-207-8120	427	16
		6150-01-207-8120	428	9
19207	12338100-1	6150-01-269-1839	339	21
19207	12338100-2	6150-01-269-1849	338	1
34623	12338103	2540-01-250-7591	430	KITS
19207	12338105	2540-01-185-3216	402	KIT
		2540-01-185-3216	452	2
19207	12338119	2510-01-246-8287	452	3
19207	12338124	5310-01-413-2049	166	9
19207	12338146	2590-01-185-6711	182	12
		2590-01-185-6711	183	20
19207	12338147	2510-01-175-7221	179	11
19207	12338148	2510-01-187-7033	183	25
19207	12338150-1	5340-01-254-6543	140	3
19207	12338150-2	2530-01-257-3864	140	6
34623	12338150-6	2590-01-395-2228	140	3
9C234	12338150-7	2590-01-395-2229	140	6
19207	12338151-1	5342-01-277-9101	147	6
19207	12338151-6	5340-01-461-7851	147	6
34623	12338151-7	2590-01-394-8134	147	3
19207	12338152	2510-01-203-9883	184	15
34623	12338155-1	2510-01-185-6647	182	19
34623	12338155-2	2510-01-185-6648	182	19
19207	12338159	5340-01-214-2089	181	1
19207	12338163	5340-01-186-7173	2	13
19207	12338164	5340-01-205-5377	188	20
19207	12338165	2530-01-210-3567	182	9
19207	12338166	5340-01-192-3414	182	5
19207	12338167-1	2590-01-184-4475	184	3
19207	12338167-2	5340-01-361-6658	184	3
19207	12338170	5340-01-190-2248	141	18
		5340-01-190-2248	162	1
		5340-01-190-2248	181	13
19207	12338171	5365-01-210-1628	184	8
19207	12338172	5340-01-209-7767	149	10
		5340-01-209-7767	183	26
		5340-01-209-7767	184	12
19207	12338173	5340-01-210-7966	181	12
34623	12338174	2510-01-210-6942	184	16
19207	12338178	5340-01-185-8620	179	14
19207	12338181	5340-01-186-7664	183	6
19207	12338183	2510-01-185-6114	2	12
19207	12338185	2590-01-186-0863	179	10
		2590-01-186-0863	180	16

CROSS REFERENCE INDEXES

PART NUMBER INDEX

CAGE	PART NUMBER	STOCK NUMBER	FIGURE NO	ITEM NO
19207	12338186-20	5310-01-292-5354	42	12
19207	12338186-52	5365-01-216-0364	277	30
		5365-01-216-0364	278	7
		5365-01-216-0364	440	3
19207	12338186-62	5310-01-337-7034	42	12
19207	12338186-69	5365-01-466-0850	463	15
19207	12338186-88	5365-01-488-5594	33B	8
19207	12338186-89	5365-01-495-5340	462	10
19207	12338187-1	5340-01-249-1576	179	5
19207	12338189	2540-01-186-6039	191	6
19207	12338190	2540-01-203-5664	184	18
19207	12338191-1	2540-01-187-7034	181	15
19207	12338191-2	2540-01-188-3239	181	15
19207	12338193	9520-01-175-7222	184	5
19207	12338194	2540-01-196-4723	188	21
19207	12338197	5340-01-204-2584	183	11
19207	12338199	2540-01-186-0501	185	5
		2540-01-186-0501	187	5
34623	12338202-1	2540-01-196-4721	188	16
19207	12338202-2	2540-01-196-4722	188	16
19207	12338205	2510-01-185-6113	2	10
19207	12338215	5340-01-175-7208	140	9
19207	12338217	2510-01-175-7217	183	12
19207	12338218	2540-01-196-4920	188	7
19207	12338221	2990-01-187-7030	23	10
19207	12338222	2510-01-175-7218	183	22
19207	12338223	2510-01-175-7219	182	17
19207	12338224	2510-01-210-6941	183	15
19207	12338225-1	5305-01-264-3602	183	1
		5305-01-264-3602	185	11
		5305-01-264-3602	187	15
		5305-01-264-3602	188	11
19207	12338226-2	5365-01-209-7832	181	5
		5365-01-209-7832	184	9
19207	12338230	2510-01-175-7216	182	11
19207	12338233-1		179	1
19207	12338233-2		179	1
19207	12338233-3		179	1
19207	12338233-4		179	1
19207	12338233-5		179	1
19207	12338233-6		179	1
19207	12338234		179	1
19207	12338234-1		179	1
19207	12338240	2530-01-189-1745	184	10
19207	12338245	2590-01-215-4325	181	6
19207	12338246	2510-01-249-1599	179	2
19207	12338268-2	2530-01-176-4650	144	6
19207	12338270	3120-01-186-5527	144	7
		3120-01-186-5527	144	21

CROSS REFERENCE INDEXES

PART NUMBER INDEX

CAGE	PART NUMBER	STOCK NUMBER	FIGURE NO	ITEM NO
		3120-01-186-5527	152	7
		3120-01-186-5527	152	21
19207	12338290	2530-01-187-7161	156	18
19207	12338291	2530-01-188-8446	153	8
19207	12338294	5306-01-197-3277	153	10
19207	12338295	2530-01-188-3520	153	7
34623	12338296	4710-01-185-9668	159	7
19207	12338301	5340-01-209-7795	159	13
19207	12338302	5340-01-209-7796	161	1
19207	12338304	4710-01-189-2208	161	11
19207	12338306	4710-01-185-9667	159	5
19207	12338308	4710-01-189-2209	161	3
19207	12338315	2510-01-187-7037	193	8
19207	12338316-1	5360-01-179-4107	192	1
34623	12338316-2	5360-01-179-4106	192	1
34623	12338316-3	5360-01-254-1492	192	1
19207	12338317	5325-01-191-0595	194	4
19207	12338319	5340-01-190-0810	194	5
19207	12338320	2530-01-210-1324	144	11
		2530-01-210-1324	152	11
19207	12338322	5310-01-185-8689	194	9
34623	12338323	3040-01-186-3718	194	10
19207	12338324	5340-01-163-4773	150	34
		5340-01-163-4773	151	40
19207	12338328	3040-01-188-3684	144	17
34623	12338328	3040-01-188-3684	152	17
19207	12338329	2510-01-187-2239	194	3
19207	12338330-1		125	1
19207	12338330-19.5		176A	19
34623	12338330-2	4720-01-409-2499	125	8
19207	12338330-22.5		176A	16
19207	12338330-6		178	12
			436	1
19207	12338330-7		178	7
			436	2
19207	12338330-8		477	3
19207	12338330-9		477	2
34623	12338333	4710-01-189-0705	124	2
		4710-01-189-0705	125	2
19207	12338338	5325-01-187-1604	23	19
		5325-01-187-1604	24	18
19207	12338339	5330-01-200-0466	23	13
		5330-01-200-0466	24	21
		5330-01-200-0466	398	24
34623	12338340	5340-01-211-3137	23	20
		5340-01-211-3137	24	17
19207	12338342	5330-01-189-9738	23	3
		5330-01-189-9738	24	15
19207	12338343-1	5340-01-212-3553	23	6

CROSS REFERENCE INDEXES

PART NUMBER INDEX

CAGE	PART NUMBER	STOCK NUMBER	FIGURE NO	ITEM NO
		5340-01-212-3553	24	23
19207	12338343-2	5340-01-484-7760	24	3
19207	12338343-3	5340-01-383-2397	401	10
19207	12338346	2990-01-211-8587	23	16
		2990-01-211-8587	24	20
19207	12338350	2990-01-190-1089	23	15
34623	12338350	2990-01-190-1089	24	24
19207	12338351	2990-01-187-7168	23	5
19207	12338356	3120-01-186-7714	21	23
19207	12338362	5340-01-383-0462	21	3
19207	12338365	2540-01-185-9656	21	26
34623	12338369	2540-01-217-2669	21	20
19207	12338373	2940-01-188-3224	12	5
19207	12338379	5330-01-188-0911	12	38
19207	12338380	4720-01-185-8152	12	8
19207	12338382	5330-01-246-1822	12	14
		5330-01-246-1822	364	2
19207	12338390	3040-01-186-0967	165	10
19207	12338394	2540-01-184-4389	165	4
19207	12338415-3	2520-01-291-2975	140	4
		2520-01-291-2975	147	4
19207	12338425	2540-01-185-6710	185	9
19207	12338426	2540-01-189-1074	185	1
19200	12338428-2	6680-01-442-9413	478	1
		6680-01-442-9413	488	2
19207	12338433	9905-01-207-6304	133	2
19207	12338434	2920-01-249-3492	99	20
19207	12338435	5930-01-212-3373	67	6
19207	12338439	2540-01-184-5502	99	4
19207	12338440-1	2520-01-184-5501	97	1
19207	12338440-2	2520-01-204-7699	97	1
19207	12338441	5342-01-188-3233	99	27
19207	12338442-1	3040-01-185-4388	99	21
19207	12338443	2520-01-189-1064	99	16
19207	12338448	2520-01-189-6726	133	10
34623	12338449	3040-01-188-3234	99	28
19207	12338451	3040-01-189-2134	99	24
19207	12338452	3040-01-198-5699	99	14
19207	12338454	2520-01-184-7036	99	22
19207	12338456	3040-01-249-1435	99	9
19207	12338457	5340-01-188-5072	99	5
19207	12338458-1	2520-01-188-8269	99	19
19207	12338459	3040-01-189-2172	133	14
19207	12338460	5306-01-201-7969	133	6
19207	12338462	5330-01-211-5856	47	5
19207	12338463	6680-01-195-2146	488	11
19207	12338465	6210-01-208-4790	47	1
19207	12338466	2540-01-185-6117	46	8
19207	12338467	2510-01-248-8875	47	6

CROSS REFERENCE INDEXES

PART NUMBER INDEX

CAGE	PART NUMBER	STOCK NUMBER	FIGURE NO	ITEM NO
19207	12338468	5905-01-183-9636	333	1
19207	12338470	9905-01-203-9992	354	10
19207	12338475	9905-01-203-9996	354	17
34623	12338477	2510-01-187-2238	46	1
19207	12338481	5340-01-266-9173	313	3
		5340-01-266-9173	443	3
		5340-01-266-9173	457	21
19207	12338482	2540-01-185-3197	187	1
19207	12338489	2540-01-209-6838	315	1
19207	12338489-1	2540-01-354-4291	315	1
		2540-01-354-4291	444	1
34623	12338495	2590-01-214-1566	315	7
		2590-01-214-1566	444	4
19207	12338503-1	2540-01-318-9229	230	8
19207	12338521-1	5365-01-413-0275	266	22
34623	12338521-1	5365-01-198-3400	248	21
19207	12338521-14	5365-01-255-0965	379	36
19207	12338521-5	5365-01-218-9914	285	8
		5365-01-218-9914	285	11
19207	12338528	2540-01-184-6602	230	3
19207	12338536	3040-01-192-1632	230	15
19207	12338539	3040-01-251-9383	230	10
19207	12338540	5340-01-185-8723	230	17
19207	12338548-2	4710-01-359-2956	15	6
		4710-01-359-2956	16	6
		4710-01-359-2956	366	18
19207	12338549	4710-01-186-9617	15	9
		4710-01-186-9617	16	8
19207	12338551-2	4720-01-212-8269	17	17
9C234	12338553-1	4720-01-316-2538	366	22
		4720-01-316-2538	368	39
		4720-01-316-2538	386	8
19207	12338557-1	5330-01-186-7757	15	30
		5330-01-186-7757	16	42
19207	12338557-2	5330-01-187-5148	15	27
		5330-01-187-5148	16	36
19207	12338558-2	5342-01-254-1498	366	1
19207	12338559	5340-01-204-3903	334	3
		5340-01-204-3903	366	27
		5340-01-204-3903	384	12
19207	12338560-1		13	14
			14	20
19207	12338560-3		14	11
19207	12338560-4		14	21
19207	12338561-2		14	25
19207	12338563	5340-01-186-8768	19	17
19207	12338564	4710-01-203-0608	366	23
19207	12338567	2910-01-184-2159	15	10
19207	12338568	5340-01-186-9606	15	32

CROSS REFERENCE INDEXES

PART NUMBER INDEX

CAGE	PART NUMBER	STOCK NUMBER	FIGURE NO	ITEM NO
		5340-01-186-9606	16	19
19207	12338571	5340-01-191-0748	15	25
		5340-01-191-0748	16	33
19207	12338574	5340-01-190-5100	15	28
		5340-01-190-5100	16	38
19207	12338575	5340-01-193-0251	15	29
		5340-01-193-0251	16	41
19207	12338577	5340-01-476-5585	11	9
19207	12338578	2910-01-210-6856	13	20
34623	12338579	2910-01-189-4770	15	1
34623	12338580	2590-01-188-3267	17	2
19207	12338585	5330-01-194-0473	15	11
		5330-01-194-0473	16	10
19207	12338591	4720-01-189-0853	178	18
19207	12338591-1	4720-01-394-3747	178	18
34623	12338593	4710-01-209-4628	178	8
19207	12338596	5930-01-183-6637	66	9
19207	12338599	5930-01-237-7322	66	1
19207	12338603	5945-01-193-7175	51	5
19207	12338605	5340-01-286-6191	62	11
19207	12338608	5340-01-183-7233	60	3
		5340-01-183-7233	61	3
19207	12338609	5340-01-189-7558	68	2
19207	12338611	6220-01-193-1970	62	14
19207	12338622	2530-01-185-9651	170	6
19207	12338629	5340-01-220-3084	205	10
19207	12338630	5340-01-185-0386	205	3
		5340-01-185-0386	206	8
19207	12338633	5340-01-251-0754	84	20
19207	12338634-1	5340-01-186-5520	205	41
19207	12338635	5365-01-210-1584	206	26
19207	12338637	5365-01-246-8281	205	18
34623	12338639-2	2510-01-185-7946	206	17
19207	12338640-2	9515-01-189-9728	205	37
19207	12338650	5342-01-203-2822	198	23
		5342-01-203-2822	280	48
		5342-01-203-2822	281	48
		5342-01-203-2822	321	27
		5342-01-203-2822	377	10
19207	12338663	5340-01-192-2256	443	8
		5340-01-192-2256	457	7
19207	12338667	5340-01-253-3757	197	23
19207	12338670	2510-01-411-2736	199	26
19207	12338676	5340-01-219-7541	64	3
19207	12338696-1	5340-01-314-4951	83	26
		5340-01-314-4951	445	11
19207	12338709	6220-01-200-0897	197	17
		6220-01-200-0897	199	51
19207	12338711	5342-01-194-3128	197	13

CROSS REFERENCE INDEXES

PART NUMBER INDEX

CAGE	PART NUMBER	STOCK NUMBER	FIGURE NO	ITEM NO
		5342-01-194-3128	199	54
19207	12338716	2510-01-186-3107	199	34
19207	12338719	2510-01-262-6009	200	6
19207	12338723	3020-01-174-5984	142	29
		3020-01-174-5984	150	29
19207	12338725	5340-01-203-2821	331	36
19207	12338726	5340-01-209-7794	51	7
19207	12338734	2510-01-186-3106	197	28
19207	12338736	2510-01-262-6008	200	5
19207	12338738	2530-01-248-4873	184	18
19207	12338740	2510-01-262-6007	198	12
19207	12338765	6160-01-470-4172	198	3
19207	12338770	2815-01-168-7892	1	2
19207	12338770-4	2815-01-319-1433	1	2
19207	12338772	2920-01-175-7214	66	2
19207	12338773	3020-01-210-1391	174	11
19207	12338774	2590-01-207-3696	173	2
19207	12338775	5342-01-203-5661	174	3
19207	12338777	5340-01-212-4714	5	14
19207	12338779	5340-01-210-2747	5	15
19207	12338780	4730-01-168-7872	6	5
19207	12338781	3020-01-188-3885	34	21
19207	12338782	3020-01-313-0682	34	21
34623	12338786-1	2590-01-444-4365	37	16
		2590-01-444-4365	475	19
19207	12338787	2815-01-168-7918	8	11
19207	12338788	2815-01-168-7917	8	10
19207	12338792	2920-01-168-7914	35	5
19207	12338803	2640-01-161-2114	167	5
19207	12338807-4		226	6
			261	7
19207	12338807-6	5330-01-298-4713	211	28
		5330-01-298-4713	212	24
19207	12338810	2540-01-246-8289	226	1
19207	12338813	5315-01-205-2988	225	36
		5315-01-205-2988	226	19
19207	12338814	5340-01-207-0379	199	24
19207	12338818	2590-01-246-8288	226	3
19207	12338819	2590-01-209-6043	226	26
19207	12338822-1	5342-01-186-7382	225	35
		5342-01-186-7382	226	23
19207	12338822-2	5342-01-185-0116	225	56
		5342-01-185-0116	226	37
19207	12338824	5340-01-185-0404	225	43
19207	12338828-1		328	1
19207	12338828-2		328	1
19207	12338829	5340-01-188-1018	225	21
		5340-01-188-1018	226	5
19207	12338830	2510-01-250-7597	227	1

CROSS REFERENCE INDEXES

PART NUMBER INDEX

CAGE	PART NUMBER	STOCK NUMBER	FIGURE NO	ITEM NO
19207	12338831	2540-01-214-1568	327	6
19207	12338833	5340-01-247-7912	226	10
19207	12338834-1	5340-01-185-6998	225	27
19207	12338834-2	5340-01-186-7594	225	11
19207	12338835	5340-01-185-0401	225	45
		5340-01-185-0401	226	32
19207	12338836-1	5340-01-186-7593	225	25
19207	12338836-2	5340-01-185-6997	225	10
19207	12338838-2	2590-01-263-3254	368	33
19207	12338839-1	5340-01-314-5957	210	15
		5340-01-314-5957	213	23
		5340-01-314-5957	225	14
		5340-01-314-5957	231	3
		5340-01-314-5957	234	15
		5340-01-314-5957	240	11
		5340-01-314-5957	246	1
		5340-01-314-5957	246	7
		5340-01-314-5957	247	11
		5340-01-314-5957	247	22
		5340-01-314-5957	248	3
		5340-01-314-5957	249	7
		5340-01-314-5957	249	15
		5340-01-314-5957	249	22
		5340-01-314-5957	249	31
		5340-01-314-5957	251	16
		5340-01-314-5957	251	24
		5340-01-314-5957	251	30
		5340-01-314-5957	251	40
		5340-01-314-5957	252	18
		5340-01-314-5957	252	33
		5340-01-314-5957	252	38
		5340-01-314-5957	253	6
		5340-01-314-5957	253	11
		5340-01-314-5957	253	16
		5340-01-314-5957	253	26
		5340-01-314-5957	253	31
		5340-01-314-5957	254	5
		5340-01-314-5957	254	11
		5340-01-314-5957	254	17
		5340-01-314-5957	255	5
		5340-01-314-5957	255	11
		5340-01-314-5957	255	15
		5340-01-314-5957	255	24
		5340-01-314-5957	255	31
		5340-01-314-5957	256	3
		5340-01-314-5957	257	2
		5340-01-314-5957	258	4
		5340-01-314-5957	259	4
		5340-01-314-5957	260	1

CROSS REFERENCE INDEXES

PART NUMBER INDEX

CAGE	PART NUMBER	STOCK NUMBER	FIGURE NO	ITEM NO
		5340-01-314-5957	262	2
		5340-01-314-5957	262	10
		5340-01-314-5957	263	2
		5340-01-314-5957	264	3
		5340-01-314-5957	265	3
		5340-01-314-5957	268	40
		5340-01-314-5957	270	39
		5340-01-314-5957	286	14
		5340-01-314-5957	287	5
		5340-01-314-5957	289	2
		5340-01-314-5957	292	2
		5340-01-314-5957	318	4
		5340-01-314-5957	374	3
		5340-01-314-5957	429	9
		5340-01-314-5957	430	5
		5340-01-314-5957	430	21
		5340-01-314-5957	430	32
		5340-01-314-5957	446	5
		5340-01-314-5957	447	2
		5340-01-314-5957	448	2
		5340-01-314-5957	449	4
		5340-01-314-5957	450	3
19207	12338839-3	5340-01-434-1809	260	21
19207	12338839-4	5340-01-197-8673	216	3
		5340-01-197-8673	252	19
		5340-01-197-8673	253	36
		5340-01-197-8673	266	12
		5340-01-197-8673	317	10
		5340-01-197-8673	321	23
		5340-01-197-8673	323	15
		5340-01-197-8673	326	6
		5340-01-197-8673	377	6
19207	12338839-6	5340-01-197-8674	228	13
		5340-01-197-8674	440	22
		5340-01-197-8674	446	31
34623	12338839-7	5340-01-214-1778	247	25
19207	12338839-8	2510-01-199-5748	321	17
		2510-01-199-5748	446	5
		2510-01-199-5748	446	22
		2510-01-199-5748	448	5
19207	12338841-1	2510-01-198-7413	225	34
		2510-01-198-7413	226	24
19207	12338842	5342-01-187-7029	12	36
19207	12338843	2590-01-188-3225	225	51
19207	12338845	5340-01-185-7024	225	18
19207	12338847		328	5
19207	12338848		328	3
19207	12338849	2540-01-192-4500	199	30
19207	12338851-1	2540-01-216-6320	226	35

CROSS REFERENCE INDEXES

PART NUMBER INDEX

CAGE	PART NUMBER	STOCK NUMBER	FIGURE NO	ITEM NO
19207	12338851-2	2590-01-209-6042	226	35
19207	12338852	2590-01-189-1067	225	53
		2590-01-189-1067	226	35
19207	12338853	5340-01-332-7515	208	8
19207	12338860	5330-01-209-5997	225	54
19207	12338862	2590-01-209-6041	226	34
19207	12338863	2540-01-196-4726	12	33
19207	12338867	5340-01-358-9301	153	12
19207	12338879	5365-01-212-2325	202	31
19207	12338880	2510-01-209-0502	202	21
19207	12338884	5340-01-211-7436	203	13
19207	12338885	5340-01-191-3222	203	17
19207	12338886	5365-01-212-4736	202	19
19207	12338889	2540-01-212-5814	202	20
19207	12338891	2540-01-209-4590	202	24
19207	12338892	5365-01-210-1630	203	27
19207	12338893	5315-01-186-5633	202	37
19207	12338894	5315-01-213-5545	202	23
19207	12338895	3120-01-186-7715	205	27
19207	12338899	5340-01-185-8619	203	8
19207	12338900	5340-01-186-1388	202	32
19207	12338902	2590-01-261-5484	202	13
19207	12338903	5365-01-210-1629	203	7
19207	12338904	2590-01-261-2636	202	6
19207	12338905	2510-01-185-6715	202	29
19207	12338906	5340-01-209-7834	203	28
19207	12338907	2590-01-261-2637	202	12
19207	12338909	2540-01-185-9530	202	17
19207	12338911	5330-01-192-8916	203	16
19207	12338915	2510-01-185-6118	205	22
19207	12338920-1	5365-01-185-3108	204	4
19207	12338920-2	5365-01-189-9743	204	4
19207	12338921	2510-01-190-8458	204	3
34623	12338925-1	2510-01-185-7950	204	11
34623	12338925-2	2510-01-185-7945	204	11
19207	12338926	2510-01-189-9730	204	3
19207	12338936	2510-01-191-0971	204	8
19207	12338937	2510-01-186-3311	204	8
19207	12338940-1	2510-01-473-2309	202	1
19207	12338945-1	2540-01-247-7915	208	38
19207	12338945-2	2540-01-247-7914	208	38
19207	12338950	2540-01-210-2787	208	33
34623	12338952-1	5342-01-249-3502	208	32
34623	12338952-2	5342-01-249-5389	208	32
19207	12338957	4720-01-212-3531	177	9
19207	12338972	5340-01-214-4675	283	9
		5340-01-214-4675	438	10
19207	12338974-2	5340-01-260-5792	266	3
19207	12338976	5342-01-214-7809	284	15

CROSS REFERENCE INDEXES

PART NUMBER INDEX

CAGE	PART NUMBER	STOCK NUMBER	FIGURE NO	ITEM NO
		5342-01-214-7809	439	8
19207	12338978-2	2540-01-209-6875	284	16
		2540-01-209-6875	439	9
19207	12338981-1	2510-01-173-9316	266	10
34623	12338981-2	2510-01-378-5615	266	10
19207	12338996	2590-01-186-3614	99	1
19207	12338997	5331-01-216-7393	488	4
19207	12338998	5331-01-216-7392	488	3
34623	12339002	5331-01-195-8889	488	18
19207	12339006	5340-01-197-5477	198	17
		5340-01-197-5477	321	20
		5340-01-197-5477	325	23
19207	12339008	6220-01-257-3878	83	32
19207	12339009	5340-01-255-9510	198	9
		5340-01-255-9510	321	14
		5340-01-255-9510	323	12
		5340-01-255-9510	325	16
		5340-01-255-9510	402	13
19207	12339013	5306-01-190-2193	71	4
19207	12339014-2	2590-01-261-6851	369	12
19207	12339015-1	2590-01-251-3070	227	17
19207	12339015-2	2590-01-251-3071	227	6
19207	12339015-3	2590-01-251-3069	227	7
		2590-01-251-3069	227	17
34623	12339015-4	2590-01-251-3068	227	20
19207	12339017	5342-01-282-4853	71	8
19207	12339018	4710-01-254-7272	227	13
19207	12339019	2510-01-250-7593	227	26
19207	12339021	2510-01-369-3230	227	27
19207	12339026	2540-01-197-5448	197	2
19207	12339027	2540-01-197-5447	197	7
19207	12339028-1	9515-01-185-3111	267	8
34623	12339029-1	2540-01-192-9716	267	7
34623	12339029-2	2540-01-192-5948	267	10
19207	12339031-1	5340-01-470-5892	198	16
19207	12339031-2	5340-01-433-6262	198	16
19207	12339034	6160-01-184-0643	71	1
19207	12339035	6160-01-184-0728	71	5
19207	12339036	2590-01-203-9874	283	28
19207	12339036-1	2510-01-383-5444	74	6
		2510-01-383-5444	283	28
19207	12339038		230	25
19207	12339039	2510-01-251-9995	227	21
19207	12339043-1	2590-01-203-9875	283	17
19207	12339043-3	2510-01-335-7343	283	17
19207	12339044	2510-01-251-8548	227	19
19207	12339047-1	2540-01-188-3675	235	9
19207	12339047-2	2540-01-185-4387	235	9
19207	12339048	2590-01-197-5446	199	49

CROSS REFERENCE INDEXES

PART NUMBER INDEX

CAGE	PART NUMBER	STOCK NUMBER	FIGURE NO	ITEM NO
19207	12339050	5306-01-502-3440	136	13
19207	12339052	5310-01-185-7214	12	11
		5310-01-185-7214	364	1
		5310-01-185-7214	436	7
19207	12339053	7690-01-204-0077	354	1
19207	12339055	9905-01-248-9550	356	2
19207	12339056-2	9905-01-248-9551	356	6
19207	12339057	7690-01-265-1133	362	3
19207	12339059	7690-01-265-1134	362	4
19207	12339060	7690-01-265-1135	362	5
19207	12339063	7690-01-204-0076	354	18
19207	12339064	7690-01-197-5500	356	4
		7690-01-197-5500	357	1
19207	12339065	7690-01-209-0864	356	1
19207	12339076	9905-01-185-3138	354	12
19207	12339077	9905-01-185-3132	354	12
19207	12339080	9905-01-224-5860	354	8
19207	12339082	9905-01-185-3134	354	12
19207	12339085	9905-01-185-3131	354	12
19207	12339087	9905-01-187-9468	355	2
19207	12339090	9905-01-186-3255	354	12
19207	12339091	9905-01-185-7973	354	12
19207	12339095	9905-01-185-7972	354	12
19207	12339096	9905-01-185-7975	354	12
19207	12339099	9905-01-185-3139	354	12
19207	12339100	9905-01-203-9994	354	4
		9905-01-203-9994	370	19
19207	12339101	9905-01-203-9995	354	14
19207	12339104	9905-01-186-3259	354	12
19207	12339105	9905-01-185-7977	354	20
19207	12339106	9905-01-193-4065	354	5
		9905-01-193-4065	370	20
19207	12339107	9905-01-185-3143	355	1
19207	12339108	9905-01-248-7656	370	13
19207	12339109	9905-01-205-8635	354	15
		9905-01-205-8635	399	1
19207	12339110	9905-01-186-3253	354	12
19207	12339111	9905-01-248-7657	354	7
19207	12339114	5315-01-185-8781	165	1
		5315-01-185-8781	166	1
19207	12339132	2510-01-185-6112	2	4
19207	12339133	2510-01-185-6115	2	1
34623	12339134	2520-01-175-7220	103	1
19207	12339137	5342-01-211-2897	7	4
19207	12339142	5340-01-182-1074	22	2
19207	12339146	2520-01-161-2136	104	1
19207	12339147	4710-01-188-3238	103	9
19207	12339147-2	4710-01-179-4346	400	5
19207	12339154-1	5340-01-251-0724	28	3

CROSS REFERENCE INDEXES

PART NUMBER INDEX

CAGE	PART NUMBER	STOCK NUMBER	FIGURE NO	ITEM NO
19207	12339155-1	4720-01-186-6018	27	5
19207	12339159	4720-01-188-1370	29	12
19207	12339160	4720-01-188-3909	29	2
19207	12339162	4720-01-187-3386	29	7
19207	12339163	4720-01-196-1636	27	9
19207	12339165-1	2930-01-210-6940	26	3
19207	12339165-2	2930-01-218-8103	26	3
19207	12339166-1	2510-01-210-6939	28	1
19207	12339166-2	2990-01-210-4276	28	1
19207	12339167	6680-01-184-9214	103	8
19207	12339168	6680-01-179-4350	3	4
19207	12339170	4710-01-196-1642	3	2
19207	12339174	2990-01-210-0427	25	4
19207	12339176	3040-01-188-8292	100	8
19207	12339178	5342-01-190-7735	103	15
19207	12339181	2990-01-210-6982	25	3
19207	12339186	2540-01-257-3877	188	4
19207	12339187	5340-01-207-0717	321	33
		5340-01-207-0717	325	28
		5340-01-207-0717	373	10
19207	12339188		199	13
19207	12339194	2590-01-247-7910	199	7
19207	12339196-1	2540-01-335-4482	199	3
34623	12339198	4330-01-189-1007	19	1
19207	12339201-1	2510-01-307-0152	332	44
19207	12339203	6210-01-211-7024	47	13
19207	12339203-1	6220-01-429-4596	47	13
34623	12339206	5310-01-439-1154	193	3
19207	12339207	5307-01-188-1229	194	11
19207	12339208	2910-01-210-5872	18	1
19207	12339222	2510-01-192-5947	199	32
19207	12339223	4010-01-194-8546	266	8
		4010-01-194-8546	284	5
19207	12339224-1	4010-01-218-4639	284	7
19207	12339224-2	4010-01-218-4640	284	9
19207	12339225-1	4030-01-255-3634	284	11
19207	12339225-2		284	11
19207	12339227-1	2510-00-933-2893	266	7
19207	12339227-2	2510-00-933-2895	266	7
19207	12339228-7	5330-01-209-7817	331	11
19207	12339228-9	5330-01-193-2338	266	9
34623	12339229-1	4010-01-217-7086	284	3
		4010-01-217-7086	439	3
34623	12339229-2	4010-01-215-7466	284	3
		4010-01-215-7466	439	3
19207	12339232-1	9515-01-185-3118	267	12
19207	12339232-2	9515-01-189-9721	267	12
34623	12339235	4730-01-184-6971	160	6
		4730-01-184-6971	162	17

CROSS REFERENCE INDEXES

PART NUMBER INDEX

CAGE	PART NUMBER	STOCK NUMBER	FIGURE NO	ITEM NO
		4730-01-184-6971	487A	10
		4730-01-184-6971	487D	6
19207	12339239-1	5305-01-195-5818	8	14
19207	12339240	5305-01-189-3769	34	20
19207	12339244-3	5340-01-209-7802	196	9
		5340-01-209-7802	196	14
19207	12339247-1	5342-01-186-7236	196	5
		5342-01-186-7236	196	15
19207	12339247-3	5342-01-406-6962	196	10
		5342-01-406-6962	196	15
19207	12339248-2	5310-01-252-7285	196	6
19207	12339248-3	5310-01-476-9321	196	6
19207	12339249-1	5365-01-264-4023	196	13
19207	12339251	4720-01-189-2218	333	38
19207	12339252	2590-01-186-8704	331	33
34623	12339255	5330-01-185-8709	331	17
19207	12339261	5340-01-189-7554	331	37
		5340-01-189-7554	332	26
19207	12339263	4710-01-210-3504	333	5
19207	12339265-1	4720-01-448-1655	331	3
19207	12339265-10	4720-01-394-6170	368	46
		4720-01-394-6170	370	8
19207	12339265-16	4720-01-451-0894	370	7
19207	12339265-2		331	6
34623	12339265-3	4720-01-279-5149	331	31
19207	12339265-6	4720-01-394-6166	370	2
19207	12339265-7	4720-01-325-6985	370	4
34623	12339265-8		331	21
19207	12339265-9	4720-01-271-6985	331	24
19207	12339267	5330-01-209-7842	331	16
19207	12339273	2510-01-210-2748	331	15
19207	12339281	2540-01-212-5815	331	27
19207	12339283	2540-01-210-1325	331	14
19207	12339289	2910-01-184-5499	331	1
34623	12339289-2	2540-01-257-3742	370	1
19207	12339291	2510-01-184-5497	331	12
19207	12339292	2910-01-184-5498	331	5
19207	12339293-1		333	4
34623	12339296	5325-01-194-0562	17	3
19207	12339308	5310-01-188-1093	169	4
19207	12339310	5315-01-201-3592	169	5
19207	12339313	5310-01-188-6861	51	13
		5310-01-188-6861	165	11
19207	12339316		44	18
19207	12339316-1		44	18
19207	12339317	6150-01-449-5445	44	23
		6150-01-449-5445	480	25
19207	12339317-1		BULK	72
19207	12339321		73	21

CROSS REFERENCE INDEXES

PART NUMBER INDEX

CAGE	PART NUMBER	STOCK NUMBER	FIGURE NO	ITEM NO
19207	12339322		73	17
19207	12339323	2590-01-217-2662	64	24
		2590-01-217-2662	81	14
19207	12339324	6150-01-473-2435	81	14
19207	12339327	5999-01-183-9530	327	18
19207	12339331	5975-01-484-1150	79	26
19207	12339332	5935-01-421-4801	83	27
		5935-01-421-4801	88	47
19207	12339333	5340-01-209-7387	75	34
		5340-01-209-7387	77	15
19207	12339334	5975-01-207-1706	75	14
19207	12339335	5340-01-212-4716	75	30
		5340-01-212-4716	77	10
19207	12339336	5340-01-206-5540	75	41
19207	12339337	5365-01-206-7486	72	7
19207	12339338	5935-01-212-9631	84	7
19207	12339342	5995-01-210-3594	81	2
19207	12339343	5340-01-198-0480	75	49
		5340-01-198-0480	77	27
19207	12339345	5995-01-188-3269	81	1
19207	12339345-1	5935-01-474-3033	84	14
19207	12339346	5995-01-197-5554	82	1
19207	12339347-1	6150-01-185-8240	327	16
19207	12339347-2	6150-01-210-3596	327	16
19207	12339349	5995-01-184-5544	80	1
19207	12339350	5995-01-184-5545	75	1
19207	12339351-3		95	22
19207	12339353-1	4820-01-359-9489	159	2
34623	12339353-1	4820-01-359-9489	160	11
19207	12339355-1	5320-01-271-6357	197	6
		5320-01-271-6357	230	21
		5320-01-271-6357	231	26
		5320-01-271-6357	235	17
		5320-01-271-6357	365	14
		5320-01-271-6357	369	7
		5320-01-271-6357	417	9
19207	12339355-2	5320-01-264-5978	199	14
		5320-01-264-5978	217	3
		5320-01-264-5978	219	6
		5320-01-264-5978	245	35
		5320-01-264-5978	264	1
		5320-01-264-5978	265	1
		5320-01-264-5978	295	9
		5320-01-264-5978	297	2
		5320-01-264-5978	300	5
		5320-01-264-5978	307	7
		5320-01-264-5978	308	13
		5320-01-264-5978	342	8
34623	12339359-12	3030-01-282-6968	35	1

CROSS REFERENCE INDEXES

PART NUMBER INDEX

CAGE	PART NUMBER	STOCK NUMBER	FIGURE NO	ITEM NO
		3030-01-282-6968	472	19
19207	12339359-14	3030-01-256-3616	475	22
19207	12339359-18	3030-01-321-4482	37	19
		3030-01-321-4482	475	27
19207	12339359-26	3030-01-333-2286	37	19
19207	12339359-28	3030-01-466-5387	476	26
19207	12339369	5360-01-198-3525	280	43
		5360-01-198-3525	281	43
19207	12339374-1	2510-01-188-7381	280	40
		2510-01-188-7381	281	40
19207	12339374-2	2510-01-189-9748	280	40
		2510-01-189-9748	281	40
19207	12339375-1	2510-01-209-3450	280	40
		2510-01-209-3450	281	40
19207	12339375-2	2510-01-196-5506	280	40
		2510-01-196-5506	281	40
19207	12339376-1		BULK	59
19207	12339376-1-AR		231	16
19207	12339377-1	2540-01-201-2356	281	9
19207	12339377-2	2540-01-201-2357	281	9
19207	12339378-1	2510-01-199-1498	280	9
19207	12339378-2	5340-01-197-4901	280	9
19207	12339379	5365-01-253-8980	280	51
		5365-01-253-8980	281	51
19207	12339380	5355-01-252-6504	280	38
		5355-01-252-6504	281	38
19207	12339386	5340-01-421-1782	281	52
19207	12339392	3020-01-232-9629	37	20
		3020-01-232-9629	475	28
19207	12339395	3020-01-198-0633	35	32
19207	12339397-1	5310-00-755-7283	199	5
19207	12339397-3	5310-01-231-7455	398	6
19207	12339397-4	5340-01-213-4662	80	15
		5340-01-213-4662	203	15
19207	12339397-5	5310-01-312-4777	203	22
19207	12339397-6	5310-01-388-6205	398	7
19207	12339402	5325-01-209-7843	333	25
		5325-01-209-7843	372	4
19207	12339404-2	5340-01-195-9107	280	18
		5340-01-195-9107	281	18
19207	12339406-2	5307-01-291-9018	30	5
		5307-01-291-9018	490	4
19207	12339406-3	5307-01-315-3597	8	12
		5307-01-315-3597	36	18
		5307-01-315-3597	38	18
		5307-01-315-3597	42	2
		5307-01-315-3597	475	15
19207	12339406-4	5307-01-465-5796	30	11
		5307-01-465-5796	472	17

CROSS REFERENCE INDEXES

PART NUMBER INDEX

CAGE	PART NUMBER	STOCK NUMBER	FIGURE NO	ITEM NO
19207	12339410	4730-01-187-6929	6	4
34623	12339411-2	4720-01-187-6911	5	10
19207	12339412	3020-01-204-8132	472	22
34623	12339413	5305-01-285-4923	44	10
19207	12339416-1	2510-01-196-5316	280	15
		2510-01-196-5316	281	15
19207	12339416-2	5342-01-195-8039	280	15
		5342-01-195-8039	281	15
19207	12339420-1	2590-01-253-3905	235	5
19207	12339426	5310-01-448-3219	332	32
19207	12339428	5305-01-211-1470	208	34
19207	12339431	2510-01-248-1340	208	19
19207	12339433	5310-01-218-3190	202	9
		5310-01-218-3190	252	29
19207	12339438	5340-01-266-6398	227	15
19207	12339448-1	5340-01-199-3498	281	6
34623	12339448-1	5340-01-199-3498	280	6
34623	12339448-4	5340-01-201-9076	280	6
		5340-01-201-9076	281	6
19207	12339450	2510-01-199-1499	280	32
		2510-01-199-1499	281	32
34623	12339451-1	3040-01-195-4173	281	33
34623	12339451-2	3040-01-196-1493	281	33
19207	12339452-1	3040-01-200-1015	280	33
34623	12339454-1	2540-01-199-5812	280	29
19207	12339462	5330-01-196-7969	281	26
19207	12339463-1	5330-01-198-8789	280	26
19207	12339463-2	5330-01-196-7968	280	26
19207	12339469-1	2510-01-254-1482	280	1
19207	12339469-2	2510-01-253-3907	280	1
19207	12339473-1	2510-01-254-1501	281	1
19207	12339473-2	2510-01-257-3904	281	1
19207	12339477-1	2510-01-257-3876	281	1
34623	12339477-2	2510-01-254-1483	281	1
19207	12339480-1	2510-01-257-3903	280	1
19207	12339480-2	2510-01-254-1500	280	1
19207	12339491-1	5342-01-250-1098	10	13
19207	12339492	5360-01-210-2852	22	3
19207	12339494	5930-01-199-8853	66	3
		5930-01-199-8853	66A	5
19207	12339501	5310-01-198-7585	167	7
		5310-01-198-7585	167	20
19207	12339503	5970-01-180-9776	75	8
19207	12339506	2510-01-289-8258	226	36
19207	12339507	2510-01-289-8260	226	36
19207	12339508	2510-01-289-8259	226	36
19207	12339509	2510-01-289-2233	226	36
19207	12339512	2510-01-233-1141	225	12
19207	12339513	2510-01-233-7767	226	4

CROSS REFERENCE INDEXES

PART NUMBER INDEX

CAGE	PART NUMBER	STOCK NUMBER	FIGURE NO	ITEM NO
19207	12339514	9340-01-185-3757	225	55
19207	12339518	5307-01-446-5930	103	14
19207	12339544	5315-01-289-6212	271	11
		5315-01-289-6212	271	24
19207	12339545	5340-01-214-4992	271	6
		5340-01-214-4992	271	23
		5340-01-214-4992	296	6
19207	12339546	2540-01-209-6049	271	3
		2540-01-209-6049	271	20
19207	12339547	5360-01-194-6070	271	4
		5360-01-194-6070	271	21
19207	12339548	5305-01-197-1594	271	2
		5305-01-197-1594	271	19
19207	12339559	5307-01-254-2504	278	11
19207	12339561	2540-01-192-5949	277	28
		2540-01-192-5949	278	9
		2540-01-192-5949	440	5
19207	12339562	2540-01-194-0197	277	26
19207	12339569	5340-01-448-4316	278	2
19207	12339579	5342-01-194-5806	269	30
34623	12339595	5330-01-195-9083	268	2
19207	12339599	5310-01-197-1100	270	36
19207	12339601	5340-01-460-5002	270	41
19207	12339602	3120-01-200-4105	268	34
19207	12339605	5340-01-197-2642	270	25
19207	12339610-1	2540-01-252-8460	270	33
34623	12339610-2	2540-01-252-3386	270	33
19207	12339612	2510-01-189-9741	268	16
34623	12339623-3	2510-01-192-9723	278	4
19207	12339624-1	2510-01-205-2507	278	5
19207	12339624-2	2540-01-203-9872	278	6
19207	12339625	2510-01-249-1583	268	22
19207	12339626-1	2590-01-205-2506	278	13
19207	12339631-2	2540-01-236-6489	278	4
19207	12339634-3		271	7
19207	12339634-4		271	7
19207	12339635-3		271	26
19207	12339635-4		271	26
19207	12339639-3		271	7
			271	26
19207	12339639-4		271	7
19207	12339640-3		271	26
19207	12339641-1	2510-01-250-7786	268	3
19207	12339641-2	2510-01-248-9557	268	3
19207	12339642	2590-01-188-7394	270	6
19207	12339644-5	2510-01-345-4365	271	1
19207	12339644-6	2510-01-344-4169	271	18
19207	12339644-8	2510-01-354-0417	271	18
19207	12339644-9	2510-01-332-0128	271	1

CROSS REFERENCE INDEXES

PART NUMBER INDEX

CAGE	PART NUMBER	STOCK NUMBER	FIGURE NO	ITEM NO
19207	12339646-1	2540-01-192-4504	269	10
19207	12339646-2	2540-01-192-9721	269	10
19207	12339649-1	2510-01-249-1582	268	21
19207	12339649-2	2510-01-249-1581	268	21
19207	12339650	2510-01-249-1580	268	20
34623	12339651-1	2510-01-262-9520	268	3
34623	12339651-2	2510-01-185-3155	268	3
19207	12339655-10	2510-01-332-0129	271	1
19207	12339655-6	2510-01-366-6968	271	18
19207	12339655-7	2510-01-348-6670	271	1
19207	12339655-8	2510-01-366-6969	271	18
19207	12339661-1	5340-01-332-7602	225	6
		5340-01-332-7602	226	39
19207	12339662	5307-01-190-7650	103	12
19207	12339663	5315-01-190-5908	266	20
19207	12339679-1	2590-01-189-9736	274	24
		2590-01-189-9736	276	21
19207	12339679-2	2590-01-188-5080	245	38
19207	12339680	2590-01-188-5079	245	14
19207	12339689		274	15
19207	12339690	2590-01-189-9747	274	14
19207	12339694	5310-01-215-5356	332	25
		5310-01-215-5356	347	7
19207	12339697	2510-01-189-3456	209	7
19207	12339698-3	2510-01-335-7799	197	25
34623	12339698-4	2510-01-361-8213	199	39
19207	12339701-1	2510-01-335-4171	197	12
19207	12339707-1	2510-01-335-4170	199	55
19207	12339724	5310-01-194-6459	277	36
19207	12339726	5315-01-203-8543	280	41
		5315-01-203-8543	281	41
19207	12339728-3	5310-01-198-3487	280	13
		5310-01-198-3487	281	13
19207	12339730	5310-01-254-4284	280	3
		5310-01-254-4284	281	3
19207	12339731	5340-01-198-2240	280	8
		5340-01-198-2240	281	8
19207	12339750	6140-01-188-5113	247	4
19207	12339751	5365-01-256-9568	245	29
19207	12339753	5340-01-196-7733	246	26
19207	12339754	5340-01-246-8290	246	34
19207	12339755-4	5340-01-258-4866	252	23
19207	12339758	5340-01-199-8258	247	19
19207	12339759	5340-01-252-0741	245	34
19207	12339760	5340-01-256-4659	243	3
19207	12339763	5340-01-256-4515	243	30
19207	12339764	7690-01-191-6467	359	7
19207	12339767	5365-01-196-2699	243	18
19207	12339778	2590-01-235-8661	243	5

CROSS REFERENCE INDEXES

PART NUMBER INDEX

CAGE	PART NUMBER	STOCK NUMBER	FIGURE NO	ITEM NO
		2590-01-235-8661	244	2
		2590-01-235-8661	244	14
19207	12339779	5340-01-256-4516	244	3
19207	12339784	2510-01-252-4756	243	21
19207	12339798	5340-01-199-3495	245	31
19207	12339802	2590-01-194-6979	249	37
19207	12339803	2590-01-194-6980	249	30
19207	12339805	5340-01-188-7382	249	29
19207	12339806	2540-01-246-8286	244	4
34623	12339807	2540-01-246-8285	244	1
19207	12339809	2590-01-199-7977	248	24
19207	12339811	2590-01-194-6981	249	5
19207	12339813	5340-01-188-7383	249	4
19207	12339814-2	5365-01-214-0006	246	30
19207	12339814-6	5365-01-256-4526	246	28
19207	12339816-3	5340-01-360-4909	446	7
		5340-01-360-4909	447	1
19207	12339817-4	5340-01-265-8923	287	27
		5340-01-265-8923	447	4
19207	12339818	2590-01-246-8291	249	13
19207	12339819	2540-01-246-8284	243	4
19207	12339820	2590-01-249-1578	244	12
19207	12339821	2540-01-246-8283	242	1
19207	12339832	5340-01-238-9543	398	5
34623	12339833	4710-01-209-6746	398	14
19207	12339843	2510-01-198-0333	398	2
19207	12339844	4710-01-202-8245	400	1
19207	12339845	2540-01-192-4502	399	12
19207	12339846	6680-01-185-3202	400	3
34623	12339847	6680-01-179-4349	400	4
19207	12339848	5340-01-185-7959	398	18
19207	12339849	2990-01-210-2176	398	19
19207	12339856	2590-01-213-1628	283	25
		2590-01-213-1628	438	21
34623	12339857	2590-01-213-1629	283	19
		2590-01-213-1629	438	15
19207	12339862-2	5310-01-211-0698	283	2
		5310-01-211-0698	438	2
19207	12339875	2540-01-213-8057	283	1
		2540-01-213-8057	438	1
19207	12339884-1	4730-00-024-3971	27	6
		4730-00-024-3971	125	9
		4730-00-024-3971	368	38
		4730-00-024-3971	176A	15
19207	12339888	4730-01-186-5994	19	15
19207	12339889	4730-01-185-9453	19	22
34623	12339889	4730-01-185-9453	27	10
19207	12339890	5340-01-187-0892	11	27
		5340-01-187-0892	13	2

CROSS REFERENCE INDEXES

PART NUMBER INDEX

CAGE	PART NUMBER	STOCK NUMBER	FIGURE NO	ITEM NO
		5340-01-187-0892	14	2
		5340-01-187-0892	141	21
19207	12339900	9905-01-248-9544	355	4
19207	12339901	9905-01-248-9546	355	4
19207	12339902-1	2590-01-196-7281	BULK	43
19207	12339902-13	2590-01-471-0236	12	16
19207	12339902-7	5342-01-272-8391	492	4
19207	12339904	5340-01-470-7135	198	4
19207	12339905	5340-01-470-7160	198	6
19207	12339906	5340-01-272-6634	490	13
19207	12339907	2510-01-250-7596	227	2
34623	12339908	2510-01-209-1881	227	12
34623	12339909	2510-01-376-1092	368	31
19207	12339912	4710-01-217-9959	286	22
19207	12339913	5365-01-255-3610	285	15
19207	12339916	5340-01-197-5469	286	4
19207	12339921	2590-01-217-2665	286	23
19207	12339924	5310-01-228-3299	286	21
19207	12339925	2540-01-217-2666	286	20
34623	12339942	2540-01-389-0984	286	7
19207	12339944	2590-01-232-8210	286	42
19207	12339945	5340-01-367-2070	266	14
19207	12339947-1	2510-01-217-2663	286	33
19207	12339947-2	2510-01-217-2664	286	33
19207	12339951	2540-01-383-6470	286	24
19207	12339952	2590-01-248-9536	286	40
19207	12339954-1	5340-01-217-2667	286	26
19207	12339954-2	5340-01-217-2576	286	26
19207	12339957	2590-01-217-5743	286	1
19207	12339958-1	2590-01-197-5474	286	39
19207	12339958-2	2590-01-197-5475	286	39
19207	12339959	2590-01-199-5425	285	1
19207	12339961-1	5340-01-196-8028	403	17
34623	12339964-3	4730-01-485-0065	135	5
34623	12339981-2	4720-01-325-0204	399	17
19207	12339981-5		399	19
			401	1
19207	12339981-6		18	6
			401	4
19207	12339981-8		141	7
19207	12339981-9		141	1
34623	12339982	4810-01-192-5817	177	5
19207	12339987	9905-01-248-9545	355	4
19207	12339988-1	5340-01-246-8282	197	31
19207	12339988-2	5340-01-248-7646	199	43
19207	12339996	5340-01-197-2382	398	28
19207	12339997	2590-01-192-4425	399	11
19207	12339998-13	4931-01-202-8692	213	13
		4931-01-202-8692	214	7

CROSS REFERENCE INDEXES

PART NUMBER INDEX

CAGE	PART NUMBER	STOCK NUMBER	FIGURE NO	ITEM NO
		4931-01-202-8692	252	24
		4931-01-202-8692	254	23
		4931-01-202-8692	267	11
		4931-01-202-8692	342	6
		4931-01-202-8692	401	18
		4931-01-202-8692	446	24
		4931-01-202-8692	498	19
19207	12339998-14	5310-01-198-1723	225	20
		5310-01-198-1723	246	15
		5310-01-198-1723	251	35
		5310-01-198-1723	252	32
		5310-01-198-1723	253	27
		5310-01-198-1723	254	18
		5310-01-198-1723	255	30
		5310-01-198-1723	263	3
		5310-01-198-1723	264	6
		5310-01-198-1723	266	11
		5310-01-198-1723	318	6
		5310-01-198-1723	333	27
		5310-01-198-1723	429	16
34623	12339999	5340-01-189-7739	266	19
19207	12340001-2	5306-01-199-1314	270	3
19207	12340019	5340-01-196-4720	188	3
19207	12340020	5340-01-214-3712	83	7
19207	12340024	4730-01-188-3296	104	16
19207	12340025	2540-01-184-5500	328	10
19207	12340027	9905-01-249-1612	354	19
34623	12340028-1L	2510-01-193-1807	207	1
34623	12340028-2L	2510-01-189-9717	207	1
34623	12340029	4720-01-212-6403	333	26
19207	12340031	2540-01-196-5313	325	2
19207	12340039-1	2540-01-197-4900	280	22
19207	12340045	5365-01-271-2491	266	26
		5365-01-271-2491	439	4
19207	12340046	4720-01-360-2380	27	7
19207	12340048		44	12
34623	12340051	2540-01-188-3229	235	3
19207	12340053	5315-01-197-3122	245	5
19207	12340057	5340-01-197-5548	37	5
19207	12340058	5310-01-253-8437	127	10
		5310-01-253-8437	230	13
		5310-01-253-8437	234	11
		5310-01-253-8437	235	12
		5310-01-253-8437	239	12
19207	12340061	2930-01-256-5350	27	3
19207	12340063	2590-01-194-0309	243	6
		2590-01-194-0309	244	5
		2590-01-194-0309	244	13
19207	12340074	2530-01-189-0897	68	9

CROSS REFERENCE INDEXES

PART NUMBER INDEX

CAGE	PART NUMBER	STOCK NUMBER	FIGURE NO	ITEM NO
19207	12340078-3	5330-01-476-9295	489	4
19207	12340078-5		489	5
19207	12340087	5340-01-249-1587	275	25
19207	12340090-1	2510-01-257-1572	277	17
		2510-01-257-1572	277	45
19207	12340090-2	2510-01-266-8013	277	18
		2510-01-266-8013	277	44
19207	12340091	2510-01-254-1056	272	16
19207	12340095	5330-01-238-3217	275	24
19207	12340097	5340-01-203-8674	274	29
19207	12340098	5365-01-253-8975	272	11
19207	12340099-1	5365-01-195-4949	277	5
19207	12340103-3	2590-01-460-8320	233	7
		2590-01-460-8320	277	32
19207	12340103-4	2590-01-457-9922	277	32
		2590-01-457-9922	473	3
19207	12340104	2510-01-257-3747	274	2
		2510-01-257-3747	276	28
19207	123401103-2	2590-01-205-8607	273	21
19207	12340111	3040-01-198-7473	273	10
19207	12340115-1	5365-01-254-4394	277	13
19207	12340115-2	5365-01-457-3364	277	13
19207	12340116	2510-01-252-6240	277	3
19207	12340123	2590-01-258-9491	272	7
19207	12340124	5340-01-253-8377	272	12
19207	12340126	2510-01-253-2839	272	10
19207	12340129	5340-01-198-2249	246	16
19207	12340130	5340-01-253-5479	246	19
		5340-01-253-5479	253	34
		5340-01-253-5479	254	25
		5340-01-253-5479	255	27
19207	12340131	2540-01-202-8545	409	11
		2540-01-202-8545	411	15
		2540-01-202-8545	415	17
19207	12340132	5365-01-198-3463	248	17
19207	12340134	2590-01-202-8546	409	6
		2590-01-202-8546	411	12
		2590-01-202-8546	415	11
19207	12340135	1010-01-247-7917	251	8
19207	12340142	2590-01-194-2048	250	22
19207	12340143	2590-01-264-6531	251	29
34623	12340147-1	2590-01-248-7622	251	33
34623	12340147-2	2590-01-248-7623	251	34
19207	12340152	1010-01-252-6300	251	9
19207	12340153	2540-01-202-8548	411	8
19207	12340154	5340-01-246-8293	251	37
19207	12340155	2510-01-197-8572	246	20
		2510-01-197-8572	253	24
		2510-01-197-8572	254	19

CROSS REFERENCE INDEXES

PART NUMBER INDEX

CAGE	PART NUMBER	STOCK NUMBER	FIGURE NO	ITEM NO
19207	12340156	1005-01-252-6299	251	3
19207	12340158-2	2590-01-247-7920	255	34
19207	12340158-3	2540-01-262-9516	253	33
		2540-01-262-9516	254	28
19207	12340160	2590-01-255-2958	251	48
19207	12340161	2590-01-255-2957	251	36
19207	12340162	1005-01-247-7916	251	6
19207	12340163	5340-01-247-7921	251	13
19207	12340164	5340-01-247-7918	252	25
19207	12340166	2590-01-246-8294	252	36
		2590-01-246-8294	253	3
		2590-01-246-8294	255	3
19207	12340167	5975-01-197-5505	409	3
		5975-01-197-5505	411	3
		5975-01-197-5505	430	48
19207	12340170	2540-01-246-8292	251	22
		2540-01-246-8292	254	3
19207	12340174	2590-01-188-7384	246	5
19207	12340175-1	2590-01-247-7923	255	8
34623	12340175-2	2590-01-262-9514	253	8
34623	12340175-3	2590-01-262-9513	253	28
19207	12340179	5340-01-247-7922	252	15
19207	12340180	2590-01-247-7924	255	22
19207	12340182-1	5340-01-208-7670	321	26
		5340-01-208-7670	325	24
		5340-01-208-7670	376	16
19207	12340182-2	5342-01-204-9610	321	26
		5342-01-204-9610	325	24
19207	12340193-1	5340-01-205-9021	316	17
		5340-01-205-9021	320	13
		5340-01-205-9021	320	25
		5340-01-205-9021	324	23
		5340-01-205-9021	324	35
		5340-01-205-9021	375	24
		5340-01-205-9021	378	24
19207	12340193-2	5340-01-205-9022	316	17
		5340-01-205-9022	320	13
		5340-01-205-9022	320	25
		5340-01-205-9022	324	23
		5340-01-205-9022	324	35
		5340-01-205-9022	375	24
		5340-01-205-9022	378	24
19207	12340196	5340-01-199-9679	326	9
19207	12340199	2540-01-197-5526	326	1
19207	12340201	5340-01-254-7189	316	19
		5340-01-254-7189	320	16
		5340-01-254-7189	320	30
		5340-01-254-7189	324	20
		5340-01-254-7189	324	32

CROSS REFERENCE INDEXES

PART NUMBER INDEX

CAGE	PART NUMBER	STOCK NUMBER	FIGURE NO	ITEM NO
		5340-01-254-7189	378	26
19207	12340212-3	5325-01-357-1080	316	18
		5325-01-357-1080	320	33
		5325-01-357-1080	324	39
19207	12340214-1	5340-01-256-9318	316	20
		5340-01-256-9318	320	17
		5340-01-256-9318	320	32
		5340-01-256-9318	324	29
19207	12340222-1	2590-01-196-1290	321	7
		2590-01-196-1290	325	11
		2590-01-196-1290	376	6
19207	12340222-2	2590-01-196-5314	321	7
		2590-01-196-5314	325	11
		2590-01-196-5314	376	6
19207	12340226	2540-01-197-5478	324	1
19207	12340226-2	2540-01-476-2172	324	1
19207	12340231-10	2510-01-450-5480	316	7
		2510-01-450-5480	320	19
		2510-01-450-5480	324	24
19207	12340231-11	2510-01-450-5479	316	7
		2510-01-450-5479	320	19
		2510-01-450-5479	324	24
19207	12340231-2	2510-01-189-9725	316	7
19207	12340231-3	2510-01-330-6174	316	7
		2510-01-330-6174	320	19
19207	12340231-4	2510-01-330-6175	316	7
		2510-01-330-6175	320	19
34623	12340231-5	2510-01-407-6037	316	7
		2510-01-407-6037	320	19
34623	12340231-6	2510-01-407-6036	316	7
		2510-01-407-6036	320	19
19207	12340239	5340-01-204-3862	317	3
		5340-01-204-3862	321	4
		5340-01-204-3862	325	7
		5340-01-204-3862	373	2
		5340-01-204-3862	376	3
19207	12340241	2540-01-197-5525	325	5
19207	12340245-3	2510-01-330-6176	320	5
19207	12340245-4	2510-01-330-6576	320	5
34623	12340245-5	2510-01-412-6761	320	5
34623	12340245-6	2510-01-413-8872	320	5
19207	12340245-7	2510-01-450-5482	320	5
		2510-01-450-5482	324	10
19207	12340245-8	2510-01-450-5483	320	5
		2510-01-450-5483	324	10
19207	12340252	2530-01-196-4724	208	1
19207	12340258	5340-01-332-7599	331	19
		5340-01-332-7599	332	23
		5340-01-332-7599	370	5

CROSS REFERENCE INDEXES

PART NUMBER INDEX

CAGE	PART NUMBER	STOCK NUMBER	FIGURE NO	ITEM NO
19207	12340259	5305-01-254-2522	230	12
		5305-01-254-2522	238	1
19207	12340259-10	5306-01-450-5947	230	14
		5306-01-450-5947	235	15
19207	12340259-11	5306-01-437-8056	234	18
		5306-01-437-8056	239	13
19207	12340259-12	5306-01-449-0510	235	11
19207	12340259-13	5306-01-437-8058	239	14
19207	12340259-2	5305-01-264-3555	230	14
19207	12340259-4	5306-01-315-7088	234	7
19207	12340259-5	5306-01-315-7087	239	3
19207	12340259-6	5306-01-316-1456	234	12
19207	12340259-7	5306-01-316-2433	234	1
		5306-01-316-2433	239	10
19207	12340263	5310-01-269-0786	26	8
19207	12340264	5340-01-197-3461	26	9
19207	12340271	5340-01-210-4751	240	9
19207	12340275-1	5340-01-210-1606	240	17
19207	12340275-3	5340-01-488-8389	240	25
19207	12340275-4	5340-01-484-6930	240	25
19207	12340286	2590-01-188-3237	240	5
19207	12340286-3	2590-01-496-1569	240	5
34623	12340288	2540-01-185-6119	240	8
34623	12340289	2540-01-223-3749	240	8
19207	12340293	2590-01-197-4899	272	37
19207	12340298	2590-01-192-4525	277	8
19207	12340301	2540-01-192-9718	277	21
19207	12340302	3110-01-185-3114	277	9
19207	12340308		276	27
19207	12340310	3120-01-188-5082	275	15
		3120-01-188-5082	276	14
19207	12340310-1		275	16
			276	15
19207	12340311	2510-01-189-9828	274	1
		2510-01-189-9828	276	25
19207	12340312	2590-01-185-3112	277	11
19207	12340314	5340-01-247-7919	252	30
19207	12340318	9905-01-248-1113	355	4
19207	12340320	9905-01-248-1114	355	4
19207	12340321	9905-01-248-9543	355	4
19207	12340322	9905-01-248-1112	355	4
19207	12340323	9905-01-185-7970	355	4
19207	12340324	9905-01-248-9548	355	4
19207	12340325	9905-01-248-9549	355	4
19207	12340326	9905-01-248-9552	355	4
19207	12340327	9905-01-248-1115	355	4
34623	12340331	4730-01-394-8345	368	37
19207	12340334	2540-01-185-3113	277	24
19207	12340336		273	15

CROSS REFERENCE INDEXES

PART NUMBER INDEX

CAGE	PART NUMBER	STOCK NUMBER	FIGURE NO	ITEM NO
19207	12340337	4710-01-189-9727	273	23
19207	12340338	2540-01-192-5937	277	41
19207	12340340	2510-01-249-1585	272	1
19207	12340342-1	4710-01-192-6113	277	42
19207	12340342-2	4710-01-192-9720	277	15
19207	12340342-3		277	43
19207	12340342-4		277	16
19207	12340342-5	4710-01-333-5995	277	42
19207	12340342-6	4710-01-335-7523	277	15
19207	12340346	2590-01-189-9734	273	6
19207	12340347	2510-01-249-1586	272	1
19207	12340349	1095-01-478-3115	275	6
19207	12340352-1	5306-01-323-5535	207	8
		5306-01-323-5535	280	50
19207	12340352-2	5306-01-323-5534	198	22
19207	12340360	2540-01-174-7696	206	14
19207	12340362	5935-01-238-0543	84	13
		5935-01-238-0543	86	21
19207	12340364	5340-01-197-5470	416	5
19207	12340366	5340-01-255-2729	429	23
19207	12340372	7690-01-248-7680	429	33
19207	12340373	7690-01-248-4908	430	43
19207	12340374	7690-01-248-7682	430	24
19207	12340375	7690-01-248-4909	430	45
19207	12340376	7690-01-250-1101	430	47
19207	12340377	7690-01-248-7679	429	28
19207	12340378	7690-01-248-7683	430	46
19207	12340379	7690-01-248-7681	429	39
19207	12340382	5340-01-249-1594	429	21
19207	12340387	5340-01-257-3778	430	25
19207	12340390	5340-01-255-9515	430	2
34623	12340395	5331-00-580-6586	177	8
		5331-00-580-6586	178	10
		5331-00-580-6586	176A	25
19207	12340401	2540-01-249-1595	429	30
19207	12340409	5340-01-248-7649	430	36
19207	12340411	2540-01-249-1598	430	30
19207	12340413	2540-01-249-1592	429	8
19207	12340414	2590-01-249-1596	430	1
19207	12340419	2540-01-249-1593	429	19
19207	12340420	2540-01-250-7592	430	31
19207	12340421	2540-01-249-1597	430	4
19207	12340422	2540-01-250-7589	429	1
19207	12340423	7690-01-248-4907	430	28
34623	12340432	2540-01-293-6926	368	2
19207	12340434	2540-01-197-5450	368	4
19207	12340436	2540-01-199-2396	366	2
19207	12340442	9905-01-199-2371	367	2
19207	12340448	5340-01-204-3904	368	21

CROSS REFERENCE INDEXES

PART NUMBER INDEX

CAGE	PART NUMBER	STOCK NUMBER	FIGURE NO	ITEM NO
19207	12340448-1	5340-01-476-5616	228	12
19207	12340466	6210-01-203-2101	367	4
19207	12340470	2540-01-254-6511	370	9
19207	12340474	5340-01-395-1244	365	24
19207	12340477	4140-01-259-2175	368	6
19207	12340486	5365-01-211-5094	177	15
19207	12340487	1015-01-200-0869	250	17
		1015-01-200-0869	252	6
19207	12340489	6150-01-260-8000	366	29
19207	12340492	4720-01-211-1998	364	4
		4720-01-211-1998	379	40
19207	12340493	4720-01-257-2655	364	9
		4720-01-257-2655	379	43
19207	12340498	4710-01-257-2649	364	5
		4710-01-257-2649	379	42
19207	12340507-4	5340-01-258-4529	251	23
		5340-01-258-4529	251	38
		5340-01-258-4529	253	19
		5340-01-258-4529	254	6
		5340-01-258-4529	255	18
		5340-01-258-4529	448	3
		5340-01-258-4529	450	5
19207	12340514	5305-01-188-5133	102	2
19207	12340515	5305-01-215-5174	3	1
		5305-01-215-5174	75	40
		5305-01-215-5174	77	21
		5305-01-215-5174	479	1
19207	12340517-1	5340-01-414-1454	319	5
		5340-01-414-1454	320	3
		5340-01-414-1454	322	4
		5340-01-414-1454	324	4
33729	12340526	5325-01-437-4175	319	7
19207	12340531-3	2590-01-194-6990	333	35
19207	12340531-4	2590-01-212-4956	333	36
19207	12340533-3	5325-00-185-0961	207	11
19207	12340535-1	2540-01-192-9715	403	21
34623	12340542-1	2540-01-394-9682	402	6
34623	12340542-2	2540-01-394-9683	402	6
19207	12340542-3	2540-01-394-4788	402	6
19207	12340542-4	2540-01-394-4787	402	6
19207	12340542-5	2540-01-394-4792	402	6
34623	12340542-6	2540-01-394-9679	402	6
19207	12340544	2540-01-185-7951	403	2
34623	12340545-2	2540-01-192-9713	403	1
		2540-01-192-9713	403	6
19207	12340549	2540-01-192-4501	403	15
19207	12340553	2540-01-185-8015	403	14
19207	12340560-1	2540-01-185-8016	402	1
19207	12340560-2	2540-01-185-3214	402	1

CROSS REFERENCE INDEXES

PART NUMBER INDEX

CAGE	PART NUMBER	STOCK NUMBER	FIGURE NO	ITEM NO
19207	12340560-3	2540-01-396-7759	402	1
19207	12340560-4	2540-01-399-0785	402	1
19207	12340560-5	2540-01-396-7756	402	1
34623	12340560-6	2540-01-396-7757	402	1
19207	12340565	3120-01-251-0735	133	13
19207	12340569	5340-01-247-7911	242	9
19207	12340570	6625-01-192-7498	69	28
19207	12340571-2	5340-01-460-5306	141	16
19207	12340581	2540-01-250-7590	415	9
34623	12340587-3	2990-01-394-9670	365	9
19207	12340589-1	5340-01-498-9619	368	45
19207	12340589-2	5340-01-498-9625	368	45
19207	12340591	2590-01-257-8787	369	13
19207	12340591-1	2590-01-452-5034	369	13
19207	12340593-1	2540-01-461-1134	369	14
34623	12340593-1	2540-01-461-1134	369	14
19207	12340595-2	5340-01-467-1669	249	47
19207	12340604		378	7
19207	12340605		378	15
19207	12340608	2510-01-325-8741	375	8
		2510-01-325-8741	375	15
19207	12340635	5340-01-255-1109	413	9
		5340-01-255-1109	421	10
		5340-01-255-1109	422	10
19207	12340636	5340-01-255-9514	415	8
19207	12340637	5985-01-253-3514	414	4
		5985-01-253-3514	425	13
19207	12340638	2540-01-202-8547	208	16
19207	12340639	5340-01-249-1590	415	7
19207	12340641	2540-01-249-1589	413	7
31272	12340648	5340-01-434-2864	272	31
19207	12340652	7690-01-256-4908	354	21
19207	12340653	9905-01-248-1111	355	4
19207	12340654	5340-01-476-6612	282	11
19207	12340655	5995-01-195-1918	282	1
19207	12340655-1	5995-01-339-0190	282	1
		5995-01-339-0190	435	4
34623	12340658	2510-01-254-1484	208	18
19207	12340661	2530-01-197-5502	490	14
19207	12340663-1	5340-01-213-4667	77	25
19207	12340664	5342-01-205-5381	77	26
19207	12340665	5340-01-213-4665	83	12
		5340-01-213-4665	88	34
19207	12340666	5340-01-443-6908	83	11
		5340-01-443-6908	88	33
19207	12340676	2540-01-189-3706	320	1
19207	12340676-11	2540-01-330-6177	320	1
34623	12340676-21	2540-01-412-2661	320	1
19207	12340676-31	2540-01-450-4019	320	1

CROSS REFERENCE INDEXES

PART NUMBER INDEX

CAGE	PART NUMBER	STOCK NUMBER	FIGURE NO	ITEM NO
19207	12340679	2540-01-196-1291	321	13
		2540-01-196-1291	376	10
19207	12340682	2540-01-199-6759	317	1
		2540-01-199-6759	321	2
		2540-01-199-6759	376	1
19207	12340688-1	5340-01-196-3297	267	19
19207	12340689-1	9515-01-185-3110	267	19
19207	12340689-2	9515-01-189-9746	267	19
19207	12340690-1	9515-01-185-3109	267	15
19207	12340690-2	9515-01-189-9731	267	15
19207	12340693-1	9515-01-186-3111	267	21
19207	12340693-2		267	21
19207	12340694-2	9515-01-189-9733	267	20
19207	12340695		365	15
34623	12340696	2910-01-320-6645	366	37
		2910-01-320-6645	384	11
19207	12340700-1		374	17
19207	12340700-10		374	10
19207	12340700-11		374	11
			374	24
19207	12340700-12		374	5
19207	12340700-14		377	4
19207	12340700-15		377	13
19207	12340700-16		377	9
34623	12340700-2		374	18
34623	12340700-3		374	18
19207	12340700-4		374	16
19207	12340700-6	2540-01-197-8071	374	16
19207	12340700-7		374	9
19207	12340700-8		374	21
19207	12340700-9		374	19
19207	12340702		366	8
19207	12340703		366	35
19207	12340704		366	36
19207	12340706		368	43
19207	12340708	5340-01-466-5243	374	4
19207	12340708-1		374	6
19207	12340709-1	5340-01-203-3273	209	2
19207	12340709-2	5340-01-205-5118	209	2
19207	12340710	5340-01-198-0686	375	9
		5340-01-198-0686	375	13
		5340-01-198-0686	378	8
		5340-01-198-0686	378	14
19207	12340713	2540-01-206-4115	317	2
		2540-01-206-4115	321	3
		2540-01-206-4115	373	1
		2540-01-206-4115	376	2
19207	12340720	5342-01-196-5312	209	11
19207	12340721	5330-01-198-3521	429	27

CROSS REFERENCE INDEXES

PART NUMBER INDEX

CAGE	PART NUMBER	STOCK NUMBER	FIGURE NO	ITEM NO
		5330-01-198-3521	BULK	51
19207	12340721-1.25		209	10
19207	12340722		365	2
19207	12340736-13	2540-01-450-4021	316	1
19207	12340736-18	2540-01-450-4017	316	1
19207	12340736-7	2540-01-314-2786	316	1
19207	12340736-8	2540-01-330-6173	316	1
19207	12340737	2540-01-200-8393	316	4
19207	12340737-2	2540-01-330-6171	316	4
34623	12340737-3	2540-01-407-9241	316	4
19207	12340737-6	2540-01-450-4018	316	4
19207	12340744	2540-01-191-0973	452	5
19207	12340747	2540-01-199-6760	318	2
19207	12340761	2540-01-189-3457	319	1
19207	12340761-2	2540-01-330-6169	319	1
19207	12340761-3	2540-01-450-7686	319	1
19207	12340761-9	2540-01-450-4015	319	1
19207	12340764-1	2540-01-199-6761	318	3
19207	12340764-2	2540-01-200-6611	318	1
19207	12340768	2540-01-197-8735	323	1
19207	12340777	2540-01-189-3707	322	1
19207	12340777-10	2540-01-450-4020	322	1
19207	12340777-15	2540-01-450-4024	322	1
19207	12340777-5	2540-01-330-6170	322	1
19207	12340779	2590-01-249-1588	286	18
19207	12340791	5340-01-395-0812	369	3
19207	12340792	5305-01-264-5874	199	50
		5305-01-264-5874	343	19
		5305-01-264-5874	495	9
19207	12340799	4720-01-214-5757	12	39
19207	12340814	7690-01-204-7785	360	1
34623	12340823	2510-01-421-8067	227	18
34623	12340824	2590-01-306-5881	227	9
19207	12340828	4710-01-251-3073	227	5
34623	12340829-1	3040-01-197-5510	368	41
19207	12340832-3	2590-01-212-1057	268	30
19207	12340832-4	2590-01-210-6202	268	30
19207	12340836	2510-01-247-7968	226	4
19207	12340842	4210-01-259-5634	241	9
		4210-01-259-5634	241	14
19207	12340843	5995-01-309-2953	82	1
19207	12340845-2	5306-01-263-8889	35	28
		5306-01-263-8889	36	12
		5306-01-263-8889	37	17
		5306-01-263-8889	38	12
		5306-01-263-8889	38A	8
		5306-01-263-8889	472	14
		5306-01-263-8889	475	21
		5306-01-263-8889	476	19

CROSS REFERENCE INDEXES

PART NUMBER INDEX

CAGE	PART NUMBER	STOCK NUMBER	FIGURE NO	ITEM NO
19207	12340845-3	5306-01-270-5448	35	29
		5306-01-270-5448	36	13
		5306-01-270-5448	38	13
		5306-01-270-5448	33A	7
		5306-01-270-5448	38A	9
19207	12340845-4	5306-01-264-3531	472	16
		5306-01-264-3531	475	24
		5306-01-264-3531	476	20
19207	12340845-5	5306-01-495-1744	492	19
19207	12340846-1	5340-01-185-8820	240	14
		5340-01-185-8820	451	1
19207	12340852	7690-01-204-7847	360	2
19207	12340860-1	2530-01-256-4914	152	20
19207	12340860-2	2530-01-257-3905	152	20
19207	12340867	9905-01-190-8425	354	12
19207	12340868	9905-01-185-3129	354	12
19207	12340869	5340-01-460-5291	199	24
34623	12340871	2510-01-373-0131	228	3
19207	12340872	2510-01-373-2783	228	1
34623	12340873	2510-01-373-7877	228	7
19207	12340874	2510-01-372-9734	228	4
19207	12340875	2510-01-374-0000	228	9
34623	12340876	2510-01-373-8445	228	8
19207	12340877	2510-01-373-2784	228	5
19207	12340879	5340-01-270-8489	338	23
		5340-01-270-8489	339	18
		5340-01-270-8489	486	10
19207	12340880	5310-01-472-7368	270	10
19207	12340890	7690-01-191-8793	359	4
19207	12340891	7690-01-189-3737	361	2
19207	12340892	7690-01-204-7850	361	8
19207	12340893	7690-01-189-3736	361	6
19207	12340894	7690-01-189-3738	361	1
19207	12340895	7690-01-204-7849	361	7
19207	12340896	7690-01-203-0161	361	4
19207	12340897	7690-01-189-3739	361	5
19207	12340898	7690-01-191-1313	359	1
19207	12340899	7690-01-189-3740	359	2
		7690-01-189-3740	361	3
19207	12340900	7690-01-191-1314	359	10
19207	12340901	7690-01-192-6371	359	3
19207	12340902	7690-01-191-1315	359	9
19207	12340903	7690-01-191-1316	359	8
19207	12340904	7690-01-190-8501	359	5
		7690-01-190-8501	360	3
19207	12340905	7690-01-192-6369	361	10
19207	12340906	7690-01-192-6370	361	9
19207	12340908	7690-01-191-1312	359	6
19207	12340909	7690-01-188-5144	356	5

CROSS REFERENCE INDEXES

PART NUMBER INDEX

CAGE	PART NUMBER	STOCK NUMBER	FIGURE NO	ITEM NO
19207	12340910	9905-01-204-7776	354	9
19207	12340917	7690-01-256-4909	354	22
19207	12340923	7690-01-264-6536	443	18
19207	12340926-3	5330-01-298-6009	296	9
19207	12340927	5930-01-266-1811	58	14
19207	12340935	5340-01-272-7814	218	8
19207	12340941	5340-01-272-6578	219	2
34623	12340946	2540-01-357-8939	288	1
19207	12340952-1	5340-01-272-2635	289	7
19207	12340952-2	5340-01-273-1680	289	7
19207	12340955	2540-01-271-3771	289	12
19207	12340958	3040-01-270-7917	238	10
19207	12340961	5365-01-272-7482	300	14
19207	12340968	5340-01-270-8370	211	18
		5340-01-270-8370	212	15
19207	12340979	2540-01-270-9344	229	1
19207	12340983	5340-01-274-3021	52	15
19207	12340984	5365-01-269-8672	211	29
		5365-01-269-8672	212	31
19207	12340990-1	5340-01-272-6520	264	5
		5340-01-272-6520	265	5
19207	12340990-2	5340-01-270-8455	264	7
		5340-01-270-8455	265	6
19207	12340994-1	3040-01-271-3824	238	17
19207	12340995-1	3040-01-270-7961	238	15
19207	12341000	6150-01-269-0067	89	1
19207	12341003	5975-01-270-8552	294	1
19207	12341004	5340-01-272-9109	294	3
19207	12341012	2540-01-271-3772	288	5
19207	12341020	2510-01-272-3951	288	12
34623	12341027	2990-01-383-5689	401	16
19207	12341045-1	5340-01-272-5652	289	21
19207	12341045-2	5340-01-272-4962	289	21
19207	12341049	4710-01-271-7937	287	30
19207	12341064	5340-01-272-8405	289	17
19207	12341073	2510-01-265-3155	293	17
34623	12341076	2540-01-275-6202	287	21
19207	12341081-2	2510-01-265-3283	297	9
19207	12341082-1	2510-01-265-3281	297	3
		2510-01-265-3281	297	10
19207	12341082-2	2510-01-265-3282	291	7
		2510-01-265-3282	297	10
19207	12341088	2540-01-271-2839	347	9
34623	12341092-1	2510-01-265-3194	293	22
19207	12341108	5985-01-269-8274	341	4
19207	12341109	5340-01-273-1684	214	24
34623	12341109-2	2510-01-265-1127	213	31
19207	12341111	5342-01-266-5691	217	1
19207	12341112	2510-01-272-3953	288	16

CROSS REFERENCE INDEXES

PART NUMBER INDEX

CAGE	PART NUMBER	STOCK NUMBER	FIGURE NO	ITEM NO
19207	12341113	2540-01-276-1451	224	5
		2540-01-276-1451	237	15
19207	12341119	5340-01-266-5708	224	14
19207	12341120	2510-01-272-0536	224	3
19207	12341125	6150-01-269-5300	92	1
19207	12341130	5342-01-275-0532	217	5
19207	12341132	2540-01-271-1946	288	27
19207	12341133	2540-01-270-5065	238	5
19207	12341135	2540-01-271-8009	238	9
19207	12341138		238	8
19207	12341139	2540-01-268-7203	299	3
19207	12341142	2510-01-266-5690	218	3
19207	12341143-1	2540-01-271-2840	289	3
19207	12341143-2	2540-01-271-2841	289	3
19207	12341145-1	2590-01-271-3770	289	26
19207	12341145-2	2590-01-271-9807	289	26
19207	12341151	5999-01-372-5601	39	80
		5999-01-372-5601	41	20
		5999-01-372-5601	475	26
19207	12341155	2540-01-266-5702	229	3
34623	12341168	2540-01-271-1991	293	20
19207	12341176	2540-01-265-3160	292	7
19207	12341205	2540-01-270-6541	237	2
34623	12341206	2540-01-270-6540	237	2
19207	12341207	6150-01-269-5298	95	1
19207	12341211-1	5330-01-265-8803	293	1
19207	12341211-2	5330-01-265-8807	223	1
19207	12341211-3	5330-01-265-8806	223	3
19207	12341211-4	5330-01-265-9231	293	33
19207	12341211-8	5330-01-265-8947	223	1
19207	12341211-9	5330-01-265-8946	223	3
19207	12341217	2510-01-266-4003	215	3
19207	12341218	2510-01-270-7922	222	23
19207	12341219	2510-01-272-0537	222	6
19207	12341227	2540-01-270-3776	337	21
19207	12341229	5340-01-266-3843	346	4
19207	12341231-1	5365-01-273-4690	338	3
19207	12341231-2	5365-01-272-8435	93	24
		5365-01-272-8435	95	41
19207	12341231-3	5365-01-274-3573	339	26
19207	12341231-4	5365-01-272-9275	96	31
19207	12341231-5	5365-01-383-3722	304	6
19207	12341231-6	5365-01-381-2215	303	8
19207	12341239	6220-01-269-7066	65	12
34623	12341246	2540-01-270-9711	238	4
19207	12341250	2510-01-280-4240	293	2
19207	12341271	2990-01-265-3297	346	2
19207	12341276	5340-01-274-3295	293	13
19207	12341286	4130-01-265-8691	344	1

CROSS REFERENCE INDEXES

PART NUMBER INDEX

CAGE	PART NUMBER	STOCK NUMBER	FIGURE NO	ITEM NO
19207	12341293	6150-01-269-5299	94	1
19207	12341294	6150-01-269-5275	91	1
19207	12341320-2	2540-01-270-6458	290	4
19207	12341320-4	2540-01-271-9806	289	15
19207	12341320-6	9330-01-269-7114	287	17
19207	12341326	7690-01-266-5706	59	20
19207	12341348	5330-01-458-3810	269	4
19207	12341353-1	5310-01-272-7449	238	23
		5310-01-272-7449	287	26
19207	12341354	5315-01-273-0096	287	22
19207	12341382	5340-01-386-6067	292	4
19207	12341384	5340-01-365-8796	287	4
34623	12341387-2	4030-01-272-7573	311	9
		4030-01-272-7573	312	5
19207	12341388	5315-01-269-8504	213	17
		5315-01-269-8504	214	13
19207	12341399	5310-01-272-9985	289	25
19207	12341401	5365-01-272-9082	308	6
19207	12341403	2510-01-265-6953	214	16
19207	12341407	5365-01-269-8671	211	8
		5365-01-269-8671	212	5
19207	12341408	6150-01-269-1840	58	13
		6150-01-269-1840	90	1
19207	12341414	4730-01-270-9652	311	11
		4730-01-270-9652	312	7
19207	12341416	5945-01-266-1810	59	5
19207	12341418	2510-01-273-8376	213	35
34623	12341420	4710-01-265-3229	335	7
		4710-01-265-3229	336	4
19207	12341429	2510-01-274-4901	222	24
19207	12341440	4710-01-265-3275	334	10
19207	12341450	2540-01-271-3828	236	2
19207	12341458	6150-01-269-1897	93	1
19207	12341466	5985-01-269-8272	340	6
19207	12341467	5975-01-270-4587	58	3
19207	12341485	5340-01-272-3353	213	3
19207	12341486	5340-01-277-8125	213	40
19207	12341487	5330-01-272-7471	347	8
34623	12341489-2	5365-01-272-6574	298	2
19207	12341491	5340-01-273-2381	215	8
19207	12341492	5975-01-275-2695	229	4
19207	12341496	5340-01-272-7495	287	2
19207	12341499	2540-01-270-6460	290	9
19207	12341500-1	5340-01-270-8432	212	22
		5340-01-270-8432	258	8
19207	12341500-2	5340-01-270-8433	211	20
		5340-01-270-8433	212	18
19207	12341500-3	5340-01-270-8431	212	25
		5340-01-270-8431	258	10

CROSS REFERENCE INDEXES

PART NUMBER INDEX

CAGE	PART NUMBER	STOCK NUMBER	FIGURE NO	ITEM NO
		5340-01-270-8431	259	13
		5340-01-270-8431	260	24
19207	12341507	5340-01-273-1686	290	6
19207	12341509	5340-01-277-5129	258	3
		5340-01-277-5129	259	6
		5340-01-277-5129	260	19
		5340-01-277-5129	262	14
19207	12341514	5330-01-272-7472	347	6
19207	12341533	2510-01-270-7919	347	5
19207	12341535	2540-01-271-3769	300	9
19207	12341536	2510-01-266-5711	216	10
19207	12341544	6220-01-270-1454	64	19
19207	12341551	4520-01-270-5080	298	4
19207	12341552	5340-01-270-4415	298	1
		5340-01-270-4415	346	7
19207	12341553	4520-01-271-2949	300	11
19207	12341555	2540-01-270-6539	236	5
19207	12341556-1	2510-01-272-0538	288	14
19207	12341556-2	2510-01-272-3952	288	14
19207	12341564	6110-01-496-9260	52	1
19207	12341565	5340-01-265-8858	289	23
19207	12341575	5340-01-297-4127	64	1
19207	12341582-1	4710-00-541-4935	288	11
19207	12341582-2	4710-01-270-9507	288	8
19207	12341583	4730-01-265-3166	301	6
		4730-01-265-3166	303	1
		4730-01-265-3166	304	1
		4730-01-265-3166	305	3
		4730-01-265-3166	306	1
		4730-01-265-3166	309	2
		4730-01-265-3166	310	2
19207	12341584	4730-00-476-7127	302	3
		4730-00-476-7127	303	4
		4730-00-476-7127	304	11
		4730-00-476-7127	305	5
		4730-00-476-7127	306	3
		4730-00-476-7127	309	10
19207	12341585	4730-00-476-5859	302	6
		4730-00-476-5859	303	15
		4730-00-476-5859	305	8
		4730-00-476-5859	306	6
		4730-00-476-5859	309	4
		4730-00-476-5859	310	6
19207	12341586	4730-01-265-3285	304	3
		4730-01-265-3285	306	5
		4730-01-265-3285	309	6
19207	12341586-3	4720-01-384-1212	301	5
19207	12341587-10		302	8
			305	4

CROSS REFERENCE INDEXES

PART NUMBER INDEX

CAGE	PART NUMBER	STOCK NUMBER	FIGURE NO	ITEM NO
19207	12341587-15		309	1
19207	12341587-2		309	9
19207	12341587-20		301	7
			303	13
19207	12341587-28		303	16
19207	12341587-4		303	5
			309	11
19207	12341591	4720-01-271-6151	300	6
34623	12341606-2	4730-01-382-3165	302	1
		4730-01-382-3165	305	1
19207	12341610	4140-01-265-3151	342	1
19207	12341614	4720-01-270-9618	310	8
19207	12341615-1	6150-01-269-1861	56	19
19207	12341615-3	6150-01-269-1862	56	20
19207	12341616	6150-01-269-1859	56	5
19207	12341617	5330-01-272-2601	222	4
19207	12341621	9905-01-265-1132	59	22
19207	12341622	9905-01-265-1131	59	22
19207	12341625-2	5330-01-265-8948	213	1
19207	12341625-4	5330-01-265-8804	214	1
34623	12341627	5325-01-289-6196	95	45
19207	12341637	5340-01-265-8924	216	6
19207	12341639	5940-01-272-5800	52	26
19207	12341640	5365-01-477-2843	227	33
19207	12341641	5340-01-381-1266	401	19
19207	12341657	5330-01-290-2709	337	9
19207	12341661	5340-01-289-3244	342	7
34623	12341662	2940-01-290-5014	337	8
19207	12341670	5365-01-272-2806	289	18
19207	12341680	5640-01-268-7204	222	7
		5640-01-268-7204	495	3
19207	12341681		495	6
19207	12341682		495	2
19207	12341684		495	8
19207	12341685		495	5
19207	12341689	2510-01-271-7085	228	10
19207	12341704-10		221	1
19207	12341704-11		221	2
19207	12341704-12		222	25
19207	12341704-13		222	1
19207	12341704-14		222	2
19207	12341704-16		222	21
19207	12341704-17		222	3
19207	12341704-18		222	8
19207	12341704-19		222	5
19207	12341704-21		222	15
19207	12341704-22		222	19
19207	12341704-23		222	18
19207	12341704-24		222	17

CROSS REFERENCE INDEXES

PART NUMBER INDEX

CAGE	PART NUMBER	STOCK NUMBER	FIGURE NO	ITEM NO
19207	12341704-6		216	7
19207	12341704-7		216	9
19207	12341704-8		221	7
19207	12341704-9		221	6
19207	12341711-1	5342-01-264-6533	212	2
19207	12341711-2	5342-01-265-3672	212	2
19207	12341714	5342-01-270-7921	307	13
		5342-01-270-7921	308	1
34623	12341726	5920-01-270-0090	52	10
		5920-01-270-0090	59	13
19207	12341730	5340-01-273-1721	492	3
34623	12341746	5340-01-276-7415	213	7
		5340-01-276-7415	214	3
19207	12341749	5935-01-269-5994	52	4
		5935-01-269-5994	57	3
34623	12341751	5930-01-287-6698	58	5
19207	12341757	9905-01-266-3913	362	2
19207	12341778	2510-01-265-1126	213	21
19207	12341779	2510-01-265-1130	214	28
19207	12341782-1	2510-01-265-1140	212	1
19207	12341782-2	2510-01-265-1141	212	1
19207	12341791-1	5305-01-272-8322	292	22
19207	12341791-2	5305-01-272-8323	292	20
19207	12341793	4820-00-287-5627	335	17
19207	12341795-1	4720-01-265-3237	301	1
19207	12341795-2	4720-01-265-3222	301	2
19207	12341796	5330-01-272-7727	223	2
19207	12341798	5340-01-271-5866	211	5
		5340-01-271-5866	291	3
		5340-01-271-5866	297	5
19207	12341800	5310-01-327-0387	337	15
19207	12341802	5340-01-265-8922	238	2
19207	12341809	3040-01-270-9466	37	6
19207	12341812	9905-01-190-8427	354	12
19207	12341813	2540-01-271-1955	311	18
19207	12341814	2540-01-271-1954	311	6
19207	12341815	5305-01-255-2670	243	1
19207	12341822	5305-01-270-7225	227	23
		5305-01-270-7225	228	2
		5305-01-270-7225	484	17
19207	12341836	9905-01-248-9547	355	4
19207	12341838	6220-01-269-7067	55	8
		6220-01-269-7067	56	10
19207	12341840	5961-01-266-3984	59	6
19207	12341848	5365-01-274-4674	338	5
19207	12341856	5310-01-286-6077	234	3
		5310-01-286-6077	239	4
19207	12341862	4720-01-265-3239	302	13
		4720-01-265-3239	305	2

CROSS REFERENCE INDEXES

PART NUMBER INDEX

CAGE	PART NUMBER	STOCK NUMBER	FIGURE NO	ITEM NO
19207	12341876	5330-01-270-8315	340	4
		5330-01-270-8315	341	3
		5330-01-270-8315	426	15
		5330-01-270-8315	427	15
19207	12341883	4730-01-297-5111	337	5
34623	12341888	5640-01-309-3867	200	1
34623	12341889	5640-01-309-3868	200	2
19207	12341891	5340-01-287-5825	227	34
19207	12341897	5310-01-289-5455	154	4
19207	12341900	5340-01-301-7929	147	10
19207	12341910	2540-01-277-2313	52	1
19207	12341967-1	5365-01-265-8937	438	16
34623	12341967-2	5365-01-265-8938	283	20
		5365-01-265-8938	438	16
19207	12341967-3	5365-01-265-8939	283	20
		5365-01-265-8939	438	16
19207	12341968	5365-01-277-2387	438	14
34623	12341968	5365-01-277-2387	283	13
19207	12341969	5340-01-265-8905	283	24
		5340-01-265-8905	438	20
34623	12341976	4720-01-265-3224	492	13
19207	12341977	4720-01-265-3223	492	5
19207	12341987		495	7
19207	12341989-1		495	4
19207	12341989-3		495	1
19207	12341997-1	5330-01-496-5547	223	4
19207	12341997-2	5330-01-496-5548	223	4
19207	12342000-1	5340-01-294-3230	300	3
19207	12342000-2	5340-01-294-4415	300	2
19207	12342000-3	5340-01-306-3606	300	4
19207	12342002	5365-01-298-7780	293	28
19207	12342003	5340-01-272-8397	293	4
34623	12342005	5340-01-296-2814	294	6
34623	12342007	4010-01-299-7699	293	24
19207	12342024	7690-01-315-8540	380	11
19207	12342026	9905-01-317-7987	380	6
19207	12342027	9905-01-317-7986	380	10
19207	12342036	5340-01-448-4245	472	13
19207	12342038	2540-01-350-9380	379	18
9C234	12342040	1005-01-321-6774	431	KITS
19207	12342043	5340-01-324-1076	431	6
19207	12342044-1	5340-01-295-8169	431	1
19207	12342044-2	5340-01-295-1088	431	5
19207	12342045	3040-01-327-1426	431	4
19207	12342047	2540-01-313-0678	230	6
34623	12342061	2540-01-314-7835	230	7
34623	12342068	2540-01-314-7834	230	1
		2540-01-314-7834	235	1
19207	12342076	5340-01-292-5402	475	7

CROSS REFERENCE INDEXES

PART NUMBER INDEX

CAGE	PART NUMBER	STOCK NUMBER	FIGURE NO	ITEM NO
19207	12342077	3990-01-314-8393	199	19
		3990-01-314-8393	251	20
		3990-01-314-8393	270	12
		3990-01-314-8393	296	3
19207	12342082	2540-01-197-5449	365	6
19207	12342083	4730-01-322-9871	368	15
19207	12342085	5342-01-326-2583	365	19
19207	12342086	2910-01-323-0123	368	35
19207	12342087-1	2540-01-394-6167	368	11
19207	12342087-2	2990-01-322-9880	365	11
19207	12342088	2540-01-197-5460	365	23
19207	12342089	2990-01-394-3751	365	12
19207	12342091	2990-01-322-9881	368	13
19207	12342092	5365-01-326-1153	368	25
19207	12342093	2990-01-322-9879	368	17
19207	12342094	2990-01-323-2562	365	7
19207	12342095	4710-01-313-9340	379	31
19207	12342096	4730-01-311-4294	17	4
19207	12342097		353	2
19207	12342099		353	3
19207	12342102	4910-01-313-8839	353	1
19207	12342102-2		353	10
19207	12342102-3		353	4
19207	12342102-4	4010-01-410-9099	353	9
19207	12342103		365	3
19207	12342104	5330-01-314-6781	104	21
19207	12342104-1	5330-01-473-4701	104	21
19207	12342105	5330-01-315-1609	104	20
		5330-01-315-1609	105	28
19207	12342106		104	22
19207	12342106-3		104	22
19207	12342107	5340-01-314-5602	104	19
		5340-01-314-5602	105	27
19207	12342121	5315-01-406-5019	353	6
34623	12342129	2540-01-314-9380	432	1
34623	12342130	2540-01-314-9379	432	1
19207	12342134	5340-01-316-1507	329	17
19207	12342135	5340-01-314-1955	329	17
19207	12342136	5340-01-316-2959	329	15
19207	12342137	5340-01-314-1956	329	15
19207	12342141	4010-01-406-6963	353	8
34623	12342142	2520-01-316-2630	178	13
		2520-01-316-2630	436	6
19207	12342144	5340-01-311-1633	104	18
19207	12342144-1	5342-01-448-4215	104	18
80212	12342152	2590-01-333-2999	377	12
19207	12342153-1	2540-01-329-8649	378	1
19207	12342153-2	2540-01-336-0791	378	4
19207	12342155	2510-01-330-2250	378	11

CROSS REFERENCE INDEXES

PART NUMBER INDEX

CAGE	PART NUMBER	STOCK NUMBER	FIGURE NO	ITEM NO
19207	12342157	2510-01-330-2249	378	11
19207	12342165	7690-01-315-8539	354	3
19207	12342166	2510-01-316-0216	389	8
19207	12342170		382	11
19207	12342171-1		382	7
19207	12342171-2		382	7
19207	12342172		382	14
19207	12342173	2590-01-317-4854	393	8
34623	12342175	2590-01-317-0534	389	13
19207	12342177		383	6
19207	12342178		383	1
34623	12342179	2590-01-317-4856	383	3
19207	12342180		382	15
19207	12342181		382	3
19207	12342182		382	3
19207	12342183		382	14
19207	12342184		382	12
19207	12342185	2590-01-317-4855	395	18
19207	12342187	2540-01-315-3762	395	6
19207	12342189	2540-01-320-8918	388	13
19207	12342191	4520-01-316-2585	387	9
19207	12342193	6150-01-324-6355	387	18
19207	12342194	9905-01-324-0886	396	7
19207	12342195	2590-01-317-3952	395	2
19207	12342198	5975-01-322-6373	396	8
19207	12342199	2540-01-317-3350	396	5
34623	12342200	2540-01-316-2697	396	9
19207	12342201	5340-01-320-2060	393	2
		5340-01-320-2060	395	13
34623	12342203	2590-01-317-3953	383	4
19207	12342210	5365-01-316-8966	382	2
34623	12342213	2540-01-316-2597	387	6
19207	12342214	2510-01-317-8258	396	1
34623	12342215	2590-01-317-7561	395	23
19207	12342216	2590-01-317-8292	395	3
19207	12342218	5340-01-318-2040	391	2
19207	12342219	5340-01-318-2041	392	10
19207	12342220-1		391	4
19207	12342220-2		391	8
19207	12342221		391	5
19207	12342223-1		397	19
19207	12342223-2		397	11
19207	12342226		391	3
19207	12342234	5340-01-317-9086	391	7
19207	12342235	5340-01-319-9426	391	9
19207	12342237	5365-01-316-8985	392	5
19207	12342248	5330-01-317-5392	393	5
		5330-01-317-5392	395	22
19207	12342255	6150-01-324-6356	383	9

CROSS REFERENCE INDEXES

PART NUMBER INDEX

CAGE	PART NUMBER	STOCK NUMBER	FIGURE NO	ITEM NO
19207	12342256	4520-01-317-0929	387	3
19207	12342257		382	15
19207	12342258	2510-01-319-9384	395	17
19207	12342260	5340-01-317-2675	388	17
19207	12342261-1	4720-01-476-4656	393	17
34623	12342264	2590-01-317-0535	389	13
19207	12342265		382	11
19207	12342266	5340-01-317-7501	389	5
34623	12342270	4710-01-317-1045	385	7
34623	12342276	4710-01-317-1044	387	14
34623	12342277	4710-01-317-1046	384	2
19207	12342281	5340-01-325-2891	433	6
19207	12342284	5340-01-318-3366	433	3
19207	12342285	5340-01-318-0212	433	11
19207	12342287	4010-01-466-0849	462	7
19207	12342294	2930-01-314-0145	379	33
19207	12342295	5340-01-333-6038	197	3
19207	12342296		211	7
			212	4
34623	12342301	2540-01-317-1024	390	10
19207	12342303	6150-01-317-5853	72	25
		6150-01-317-5853	434	1
		6150-01-317-5853	435	1
19207	12342306	5340-01-315-7223	72	23
		5340-01-315-7223	73	10
19207	12342308		201	6
19207	12342309		201	3
19207	12342310		201	4
19207	12342311		201	5
19207	12342312		201	1
19207	12342313		201	2
19207	12342314	2540-01-337-0242	323	5
19207	12342317	2510-01-319-5952	397	10
19207	12342322	5340-01-318-4893	397	6
19207	12342324	5340-01-318-2180	397	3
19207	12342327	2510-01-498-8000	397	21
19207	12342330	2510-01-314-4892	397	18
34623	12342332	2540-01-317-0820	390	1
19207	12342338	5305-01-315-8649	69	33
		5305-01-315-8649	434	4
		5305-01-315-8649	435	9
19207	12342343	5330-01-318-1998	395	5
19207	12342344	5330-01-318-9780	395	7
19207	12342345	5330-01-317-5393	395	4
19207	12342354	4030-01-316-1551	183	2
		4030-01-316-1551	185	12
		4030-01-316-1551	187	16
		4030-01-316-1551	188	12
19207	12342355	5330-01-334-2834	205	5

CROSS REFERENCE INDEXES

PART NUMBER INDEX

CAGE	PART NUMBER	STOCK NUMBER	FIGURE NO	ITEM NO
		5330-01-334-2834	206	5
19207	12342357	5330-01-340-5627	205	6
19207	12342358	5330-01-341-8963	206	6
19207	12342361	5340-01-317-1470	181	4
19207	12342362	5340-01-317-0147	181	17
19207	12342372	5340-01-334-4241	234	20
34623	12342373	2590-01-315-9128	188	8
19207	12342374	5340-01-334-2887	239	5
19207	12342381	5340-01-333-5851	234	8
19207	12342383	5340-01-336-3004	251	27
		5340-01-336-3004	252	27
		5340-01-336-3004	253	22
		5340-01-336-3004	254	27
		5340-01-336-3004	255	21
19207	12342387	2510-01-358-1178	187	4
		2510-01-358-1178	441	4
		2510-01-358-1178	456	1
19207	12342388	2510-01-357-8789	187	4
		2510-01-357-8789	441	4
		2510-01-357-8789	456	1
19207	12342389	2510-01-358-1176	187	7
		2510-01-358-1176	441	12
		2510-01-358-1176	456	21
19207	12342390	2510-01-358-1177	187	7
		2510-01-358-1177	441	12
		2510-01-358-1177	456	21
19207	12342395	2540-01-361-8206	187	1
		2540-01-361-8206	441	1
19207	12342403	6220-01-323-0431	396	13
19207	12342404	2590-01-316-0084	185	9
34623	12342404	2590-01-316-0084	186	14
		2590-01-316-0084	187	13
34623	12342408	2510-01-350-4949	203	3
19207	12342412		437	1
19207	12342418	5340-01-332-7516	437	9
34623	12342435-1	2930-01-471-0622	28	5
19207	12342439	7690-01-350-2094	358	4
19207	12342440	5305-01-481-7254	169	31
34623	12342441	2540-01-395-8785	375	1
19207	12342442	2540-01-197-5528	375	4
19207	12342455	2510-01-335-7363	227	10
19207	12342475	2540-01-314-2782	320	2
19207	12342475-1	2540-01-330-6172	320	2
19207	12342475-2	2540-01-413-1356	320	2
19207	12342475-6	2540-01-450-5477	320	2
19207	12342495	5340-01-385-0057	377	3
19207	12342496	5340-01-396-8322	377	3
34623	12342499-1	5305-01-259-6322	58	2
		5305-01-259-6322	59	26

CROSS REFERENCE INDEXES

PART NUMBER INDEX

CAGE	PART NUMBER	STOCK NUMBER	FIGURE NO	ITEM NO
		5305-01-259-6322	79	16
		5305-01-259-6322	83	17
		5305-01-259-6322	88	5
		5305-01-259-6322	88	26
		5305-01-259-6322	227	3
		5305-01-259-6322	286	41
		5305-01-259-6322	303	14
		5305-01-259-6322	310	5
		5305-01-259-6322	332	29
		5305-01-259-6322	335	3
		5305-01-259-6322	338	17
		5305-01-259-6322	339	10
		5305-01-259-6322	368	7
		5305-01-259-6322	412	17
		5305-01-259-6322	424	5
		5305-01-259-6322	425	19
		5305-01-259-6322	426	24
		5305-01-259-6322	427	24
		5305-01-259-6322	468	10
19207	12342499-2	5305-01-264-5809	155	10
		5305-01-264-5809	226	33
		5305-01-264-5809	227	36
19207	12342501	2540-01-186-0969	327	8
19207	12342501-1		327	9
19207	12342503		179	1
19207	12342509	5340-01-358-5588	180	6
19207	12342510	5340-01-358-7595	180	26
19207	12342515	2540-01-360-2482	442	16
19207	12342516	2590-01-360-5414	442	6
19207	12342517	2590-01-360-5413	442	6
19207	12342518	2590-01-360-5411	442	19
19207	12342519	2590-01-363-2084	442	19
19207	12342520	2590-01-360-5412	442	11
19207	12342521	2590-01-360-9536	442	11
34623	12342522	2590-01-361-8087	442	3
19207	12342523	2590-01-364-1534	442	15
19207	12342539	2590-01-360-9537	442	9
19207	12342540	2590-01-361-8088	442	3
19207	12342545	5307-01-408-4029	33	20
		5307-01-408-4029	37	18
		5307-01-408-4029	475	25
		5307-01-408-4029	476	23
19207	12342557	5365-01-359-9406	440	19
19207	12342558	2540-01-387-5578	440	13
19207	12342559	5340-01-359-9474	440	8
19207	12342560	5340-01-359-8933	440	20
19207	12342561	5340-01-360-2053	440	14
19207	12342562	5340-01-360-1886	440	23
34623	12342565	2990-01-299-8820	401	13

CROSS REFERENCE INDEXES

PART NUMBER INDEX

CAGE	PART NUMBER	STOCK NUMBER	FIGURE NO	ITEM NO
19207	12342566	2990-01-382-8796	401	6
19207	12342567-2	2990-01-385-8988	401	5
19207	12342569	5365-01-381-1783	401	7
9C234	12342570	2540-01-395-4202	370	6
19207	12342571	5340-01-394-7853	369	9
34623	12342572	2540-01-407-3296	369	5
19207	12342573	5340-01-393-9371	369	11
16615	12342574	2590-01-360-2417	446	25
19207	12342580	5340-01-360-1784	446	35
19207	12342583	5340-01-360-1188	446	34
19207	12342584	5340-01-360-1727	446	2
19207	12342585	5340-01-359-8819	446	4
19207	12342586	5340-01-360-2979	446	17
19207	12342587	5340-01-360-9070	446	33
19207	12342594	5340-01-360-1887	446	29
19207	12342595		446	1
19207	12342596		446	30
34623	12342602	3040-01-358-7034	488	17
19207	12342605	4710-01-395-3982	366	11
19207	12342606	4710-01-394-6169	366	15
19207	12342616	5360-01-357-2413	192	1
34623	12342620	2520-01-356-9189	136	6
19207	12342623	5340-01-361-1212	440	18
19207	12342625	7690-01-358-9391	361	11
19207	12342633	5331-01-335-8878	167	16
19207	12342634	2640-01-335-4583	167	23
19207	12342638	2640-01-334-9453	167	17
34623	12342639	2530-01-338-2730	167	18
19207	12342640	2530-01-336-3127	167	19
19207	12342641	2610-01-500-4806	167	13
19207	12342642	2530-01-336-5740	167	14
19207	12342643-1	2520-01-452-7569	126	2
		2520-01-452-7569	127	3
19207	12342646	5340-01-378-5201	69	16
19207	12342647	5340-01-378-7525	69	17
19207	12342648	9905-01-397-3196	370	12
19207	12342652	9905-01-364-7342	354	12
19207	12342653	9905-01-362-2014	355	4
19207	12342654	5935-01-415-4322	76	18
34623	12342655	4730-01-439-2814	496	23
19207	12342658	5340-01-358-6697	74	3
19207	12342661	2540-01-411-7519	453	10
19207	12342662	5340-01-406-6964	453	13
19207	12342663	5340-01-406-6965	453	8
19207	12342664	5340-01-406-7418	453	6
19207	12342665	5340-01-407-7192	453	17
19207	12342666	5340-01-360-2021	440	15
19207	12342667	6150-01-366-2916	445	12
19207	12342668	5340-01-360-1189	445	6

CROSS REFERENCE INDEXES

PART NUMBER INDEX

CAGE	PART NUMBER	STOCK NUMBER	FIGURE NO	ITEM NO
19207	12342669	7690-01-481-4552	448	12
19207	12342670	9905-01-365-8849	448	11
19207	12342679	5340-01-380-4561	153	1
19207	12342680	5310-01-382-5031	142	19
		5310-01-382-5031	143	26
		5310-01-382-5031	150	19
		5310-01-382-5031	151	26
19207	12342681	5930-01-347-9216	327	10
19207	12342682	5355-01-353-6934	327	12
9C234	12342683	2590-01-394-9672	234	4
19207	12342711	3120-01-413-6106	40	42
		3120-01-413-6106	43B	44
19207	12342712	5935-01-415-4392	75	20
		5935-01-415-4392	76	20
34623	12342745	2910-01-357-8798	15	1
19207	12342746	5340-01-357-3996	15	10
		5340-01-357-3996	16	9
19207	12342747	4710-01-358-6397	13	22
		4710-01-358-6397	14	8
19207	12342748	4710-01-358-2127	13	21
		4710-01-358-2127	14	7
19207	12342750	5340-01-360-2020	442	12
19207	12342751	5365-01-394-0440	370	14
19207	12342752	5365-01-394-2394	369	6
19207	12342754	5340-01-394-7288	370	22
9C234	12342755-2	2540-01-395-3979	372	3
9C234	12342756	2540-01-395-2230	372	7
19207	12342784	2590-01-377-6819	250	7
19207	12342785	5340-01-476-6587	250	8
19207	12342786	5340-01-476-6205	250	11
19207	12342787	5340-01-476-6182	250	12
34623	12342788	6220-01-362-5211	97	9
19207	12342789	6150-01-362-5229	81	8
19207	12342794	5331-01-346-3806	167	25
19207	12342795	5340-01-381-2045	401	17
19207	12342801	5340-01-381-1808	140	9
19207	12342805		278	3
19207	12342806	7690-01-407-8248	370	15
19207	12342808	2930-01-385-9108	333	19
19207	12342809	5340-01-381-2248	333	16
19207	12342855	2510-01-274-4234	455	1
19207	12342859	5365-01-406-6336	455	4
19207	12342864	5310-01-415-5245	76	19
34623	12342872	5330-01-452-2474	12	27
34623	12342875	2530-01-383-5740	169	9
19207	12342876	2530-01-384-7154	169	13
34623	12342878	2540-01-449-1718	379	20
19207	12342878-2	2540-01-451-9345	379	20
19207	12342880	2540-01-445-6029	379	17

CROSS REFERENCE INDEXES

PART NUMBER INDEX

CAGE	PART NUMBER	STOCK NUMBER	FIGURE NO	ITEM NO
19207	12342881	2510-01-465-7620	379	19
19207	12342883	5340-01-406-7413	455	8
19207	12342884	5340-01-408-8526	455	7
19207	12342886	5330-01-381-1810	327	33
34623	12342898	2530-01-357-9776	163	7
19207	12342900	4710-01-358-1943	159	1
		4710-01-358-1943	160	12
19207	12342901	4710-01-357-9968	161	6
19207	12342902	6150-01-396-0906	386	2
19207	12342903	5340-01-394-2409	390	12
19207	12342917	5935-01-384-2610	73	1
19207	12342920	5935-01-397-3813	73	5
19207	12342924	5935-01-396-3991	73	14
19207	12342925	5310-01-406-9129	73	16
19207	12342930	4140-01-394-8583	43B	42
34623	12342933	5331-01-477-3657	15	17
		5331-01-477-3657	16	16
19207	12342935		15	18
19207	12342938		15	19
19207	12342943	4910-01-185-7966	504	2
19207	12342947	4730-01-399-0241	178	17
34623	12342949	4710-01-412-0273	14	1
34623	12342950	4710-01-413-1360	14	5
34623	12342951-1	4730-01-412-5216	14	12
34623	12342951-2	4730-01-412-5213	14	26
19207	12342953-2	4820-01-456-0172	19	23
9C234	12342954	2590-01-396-1422	232	1
9C234	12342955	2590-01-396-1424	232	1
34623	12342960	2540-01-395-7999	188	3
19207	12342965	5340-01-394-2408	155	15
19207	12342966	5340-01-394-8496	155	20
19207	12342972-1		179	1
19207	12342972-2		179	1
19207	12342980	9905-01-392-5795	355	4
19207	12342981	9905-01-384-5311	354	12
19207	12342986	9905-01-387-2761	354	12
19207	12342987	9905-01-393-3795	355	4
19207	12342991	9905-01-393-1834	355	4
19207	12342992	9905-01-397-6974	354	12
19207	12342993	9905-01-392-5796	355	4
19207	12342995	9905-01-387-2752	354	12
19207	12342997	9905-01-393-9357	354	12
19207	12342999	9905-01-393-1830	355	4
19207	12343001	9905-01-392-5798	355	4
19207	12343002	9905-01-393-5622	354	12
19207	12343010	9905-01-387-1145	354	12
19207	12343011	9905-01-392-5797	355	4
19207	12343018	9905-01-393-7128	355	4
19207	12343020	9905-01-385-2639	354	12

CROSS REFERENCE INDEXES

PART NUMBER INDEX

CAGE	PART NUMBER	STOCK NUMBER	FIGURE NO	ITEM NO
19207	12343023	9905-01-387-2746	354	12
19207	12343025	9905-01-392-5799	355	4
19207	12343040	9905-01-392-5800	355	4
19207	12343041	9905-01-385-2633	354	12
19207	12343043	9905-01-392-5794	355	4
19207	12343044	9905-01-387-2762	354	12
19207	12343046	9905-01-387-1146	354	12
19207	12343048	9905-01-393-1833	355	4
19207	12343049	9905-01-392-5796	355	4
19207	12343050	9905-01-393-5623	354	12
19207	12343053	2540-01-383-5660	231	4
19207	12343054	7690-01-382-8471	354	14
19207	12343055	5365-01-382-0986	454	5
19207	12343058	9905-01-393-3794	354	8
19207	12343059	6160-01-384-3922	231	31
19207	12343062	5340-01-408-6456	329	17
		5340-01-408-6456	461	2
19207	12343063	5340-01-408-6460	329	15
		5340-01-408-6460	461	7
19207	123490694	5340-01-199-4989	272	30
76760	12353	2520-01-163-4999	126	2
19207	12356703-1	5980-01-187-0791	46	3
19207	12356703-3	6220-01-273-0500	47	4
19207	12356704	5930-01-183-6757	67	7
19207	12356764-1	5360-01-315-7212	316	11
		5360-01-315-7212	320	10
		5360-01-315-7212	320	22
		5360-01-315-7212	324	13
		5360-01-315-7212	324	27
		5360-01-315-7212	375	18
		5360-01-315-7212	378	18
19207	12356764-2	5360-01-315-7211	316	11
		5360-01-315-7211	320	10
		5360-01-315-7211	320	22
		5360-01-315-7211	324	13
		5360-01-315-7211	324	27
		5360-01-315-7211	375	18
		5360-01-315-7211	378	18
19207	12356766	5930-01-318-2809	380	8
19207	12356789	5330-01-319-7302	387	10
19207	12356795	5365-01-289-6169	92	18
19207	12357116	5365-01-289-4434	35	10
19207	12357126	5365-01-289-7852	35	11
19207	12360850-1	6220-01-284-2709	61	8
19207	12360865	5961-01-305-8848	60	8
19207	12360870-2	6220-01-297-3217	61	9
19207	12368374	5340-01-314-2445	379	35
19207	12368375	5340-01-315-4955	379	15
19207	12368387	5340-01-320-1079	379	45

CROSS REFERENCE INDEXES

PART NUMBER INDEX

CAGE	PART NUMBER	STOCK NUMBER	FIGURE NO	ITEM NO
19207	12368390	5340-01-314-6838	379	51
19207	12368391	5340-01-315-4120	379	47
19207	12368392	5340-01-314-5567	379	11
19207	12368394	6150-01-315-1148	381	3
19207	12368395	6150-01-314-5241	381	4
19207	12368396	6150-01-314-5643	381	1
19207	12368397-2	5365-01-314-5544	379	4
		5365-01-314-5544	379	6
19207	12368398	2540-01-314-1130	379	26
34623	12368400	2540-01-317-3309	379	28
19207	12368443	2990-01-314-0151	379	30
19207	12375837	6220-01-372-3883	61	4
19207	12375838		61	5
19207	12375841	6220-01-359-2870	61	10
34623	12380007	3020-01-482-1834	33	18
		3020-01-482-1834	33A	4
34623	12380024	3020-01-480-8698	33	17
		3020-01-480-8698	33A	3
19207	12387349-43	5310-00-061-4651	185	8
		5310-00-061-4651	186	11
		5310-00-061-4651	187	6
		5310-00-061-4651	194	12
		5310-00-061-4651	441	9
		5310-00-061-4651	442	20
		5310-00-061-4651	457	20
		5310-00-061-4651	470	12
19207	12412123	5310-01-374-4512	261	3
19207	12420924-004	5975-01-421-9718	BULK	64
9C234	12446700	2540-01-383-5232	227	2
19207	12446701	2540-01-384-1012	227	26
19207	12446702	2540-01-384-1028	227	27
19207	12446706	5340-01-473-4800	241	15
34623	12446709	2540-01-447-3457	231	9
34623	12446714	2540-01-381-8988	231	18
19207	12446724	5340-01-387-0090	231	5
19207	12446727		273	15
19207	12446730	5340-01-457-1778	273	18
19207	12446734	7690-01-445-0456	361	11
19207	12446735	5365-01-380-7340	231	23
19207	12446736	5365-01-382-1178	231	30
19207	12446737	6160-01-384-0325	231	32
19207	12446739	2590-01-396-5007	233	3
9C234	12446741	2590-01-394-9673	233	3
34623	12446747	2540-01-381-2079	231	19
19207	12446751	4820-01-431-2499	19	10
34623	12446753	3020-01-466-3603	476	10
34623	12446754	4710-01-466-5447	479	2
19207	12446755	5342-01-466-6283	476	24
19207	12446758	5342-01-466-6276	476	5

CROSS REFERENCE INDEXES

PART NUMBER INDEX

CAGE	PART NUMBER	STOCK NUMBER	FIGURE NO	ITEM NO
19207	12446762	2590-01-406-9821	252	8
34623	12446763	2590-01-439-8268	332	33
		2590-01-439-8268	370	28
		2590-01-439-8268	411	20
19207	12446765	5340-01-476-4374	332	4
		5340-01-476-4374	372	1
19207	12446766	5340-01-412-0866	409	6
		5340-01-412-0866	411	12
19207	12446767	3040-01-197-8727	272	26
19207	12446770	5340-01-457-0459	205	16
19207	12446771		205	13
34623	12446772	2590-01-411-2737	254	8
34623	12446773	2590-01-411-3958	210	9
19207	12446774	5340-01-408-6459	210	12
19207	12446780	7690-01-458-8254	354	12
19207	12446782	9905-01-448-9783	355	4
19207	12446783	9905-01-446-5769	354	12
19207	12446785	9905-01-446-6187	355	4
19207	12446786	9905-01-447-7799	354	12
19207	12446788	9905-01-448-9784	355	4
19207	12446789	9905-01-448-9786	354	12
19207	12446791	9905-01-446-5768	355	4
19207	12446792	9905-01-446-5770	354	12
19207	12446794	9905-01-446-5771	355	4
19207	12446798	7690-01-450-5481	354	12
19207	12446801	9905-01-449-0476	355	4
34623	12446802	2530-01-411-2735	169	8
19207	12446803	2530-01-411-2729	169	6
19207	12446811	3990-01-411-6575	210	7
19207	12446812	5340-01-415-8672	210	2
19207	12446813	5340-01-429-9352	210	1
34623	12446814	2510-01-411-4175	210	8
34623	12446819	2540-01-410-8793	352	4
		2540-01-410-8793	459	4
19207	12446821-1		41	16
19207	12446821-2	6150-01-467-6716	41	6
		6150-01-467-6716	472	5
		6150-01-467-6716	474	10
19207	12446821-3	6150-01-417-3411	69	35
19207	12446821-4	6150-01-444-4437	44	12
19207	12446821-5	6150-01-415-0535	41	1
19207	12446821-6	6150-01-466-7528	472	18
19207	12446824	5340-01-414-0701	71	1
19207	12446825	6150-01-416-7899	474	10
		6150-01-416-7899	475	4
19207	12446828	6150-01-412-3192	76	1
19207	12446845-1	6220-01-418-4404	63	8
19207	12446845-2	5980-01-443-9093	63	8
19207	12446846	2540-01-473-6304	227	37

CROSS REFERENCE INDEXES

PART NUMBER INDEX

CAGE	PART NUMBER	STOCK NUMBER	FIGURE NO	ITEM NO
19207	12446847	2540-01-473-7521	227	42
19207	12446848	2540-01-473-7553	227	52
19207	12446849	2540-01-473-8050	227	55
19207	12446850	2540-01-473-7544	227	45
19207	12446851	2540-01-473-7959	227	54
19207	12446852	2540-01-475-4708	227	51
19207	12446853	2540-01-473-8310	227	40
19207	12446854	2540-01-473-7107	227	41
19207	12446856	2510-01-473-8204	227	47
19207	12446857	5315-01-473-3682	227	43
19207	12446858	5340-01-479-0211	227	38
19207	12446868	2510-01-262-6011	198	26
19207	12446871-10	5325-01-460-8350	465	5
34623	12446878	2510-01-414-7846	226	4
19207	12446879	2510-01-413-3360	225	12
34623	12446880	2510-01-413-3259	226	4
19207	12446899	5340-01-408-6462	210	5
19207	12446900	5340-01-408-6458	210	6
19207	12446907	2510-01-456-7889	268	3
19207	12446908		269	1
19207	12446911	2510-01-476-2171	268	3
19207	12446912		269	1
34623	12446913-1	2510-01-411-0653	267	8
19207	12446913-2	2510-01-413-3618	267	8
19207	12446914	7220-01-431-8340	210	10
34623	12446928	2590-01-410-9968	197	9
19207	12446933	9540-01-472-5874	88	48
34623	12446953	2540-01-176-6521	205	12
19207	12446961	2540-01-461-1129	227	19
19207	12446966	2540-01-477-0162	454	2
19207	12446967	2540-01-477-0184	454	2
19207	12446973	2540-01-411-2733	188	7
19207	12446978-1		179	1
19207	12446981	2540-01-477-0242	397	14
19207	12446982	5340-01-450-7521	387	1
19207	12446983	2540-01-476-7827	397	13
19207	12446985	2930-01-405-9885	26	1
19207	12446987	3990-01-432-5370	199	19
		3990-01-432-5370	270	12
19207	12446988	2510-01-410-7169	199	27
19207	12446989	5340-01-408-8523	188	16
19207	12446990	5340-01-408-8529	188	16
19207	12446991	5340-01-476-6243	188	21
34623	12446993	2590-01-410-9967	261	5
34623	12446998	2590-01-410-8791	261	6
19207	12446999	5340-01-408-8512	261	12
19207	12447000	5340-01-408-8509	261	10
19207	12447001	2590-01-478-6799	181	17
19207	12447003	7690-01-476-6510	354	10

CROSS REFERENCE INDEXES

PART NUMBER INDEX

CAGE	PART NUMBER	STOCK NUMBER	FIGURE NO	ITEM NO
19207	12447007	2540-01-474-3217	333	11
19207	12447010-1	4720-01-474-9148	332	7
34623	12447010-2	4720-01-444-6433	332	11
19207	12447010-3	4720-01-445-5690	332	10
19207	12447011	7690-01-476-6089	354	4
34623	12447012	2540-01-444-6642	332	30
19207	12447013	5340-01-470-2069	332	28
19207	12447027	5305-01-449-1983	169	31
19207	12447028	4720-01-445-5705	332	41
34623	12447029	2510-01-411-0652	226	27
		2510-01-411-0652	460	1
19207	12447035	5307-01-411-8340	261	4
19207	12447036	5315-01-408-7089	261	16
19207	12447037	5365-01-408-8507	261	2
34623	12447046	2540-01-447-2236	332	14
19207	12447047	2540-01-474-8562	332	36
34623	12447048	2540-01-444-6655	332	22
34623	12447050	2540-01-444-5340	332	20
19207	12447051	5340-01-484-7646	182	5
34623	12447053	2510-01-412-4969	180	15
19207	12447054	2540-01-488-6429	371	1
19207	12447057-1	3120-01-448-6269	456	9
19207	12447057-2	3120-01-448-6268	456	12
19207	12447058	3120-01-440-0043	456	8
19207	12447060-1	3040-01-477-9645	456	11
34623	12447060-2	3040-01-444-3350	456	13
19207	12447073		125	5
19207	12447076	4820-01-456-6257	125	19
		4820-01-456-6257	332	14
34623	12447077	4730-01-409-1204	125	18
19207	12447078	2540-01-411-3946	166	10
19207	12447083	6220-01-408-7785	49	1
19207	12447084	6220-01-445-5058	49	10
34623	12447088	2590-01-444-3399	456	14
19207	12447089-1	5340-01-413-0282	186	12
		5340-01-413-0282	188	31
19207	12447089-2	5340-01-412-7514	188	10
19207	12447091	2540-01-412-8610	186	1
		2540-01-412-8610	456	3
19207	12447092	2590-01-412-7564	186	10
34623	12447093	2590-01-412-9560	186	10
19207	12447100	2590-01-412-9570	186	5
19207	12447101	2590-01-412-3862	186	5
19207	12447102	7690-01-445-0444	456	2
19207	12447103	5340-01-414-8959	77	23
19207	12447104	2590-01-448-6351	456	7
19207	12447108-1		1	2
19207	12447109	2920-01-420-9968	38	4
		2920-01-420-9968	40	1

CROSS REFERENCE INDEXES

PART NUMBER INDEX

CAGE	PART NUMBER	STOCK NUMBER	FIGURE NO	ITEM NO
19207	12447110	2920-01-407-0532	36	4
		2920-01-407-0532	43B	1
19207	12447123-1	5340-01-430-9240	321	25
		5340-01-430-9240	376	21
19207	12447124-1	5340-01-430-9239	321	25
		5340-01-430-9239	376	21
34623	12447130	2540-01-444-6615	332	19
19207	12447132	5340-01-449-7352	332	16
34623	12447143	2540-01-465-9030	463	13
34623	12447144	2540-01-466-3770	463	16
19207	12447145	5340-01-466-2425	463	18
19207	12447146	5340-01-466-1982	463	10
19207	12447148	5340-01-466-4086	463	20
19207	12447149	5310-01-465-9727	463	19
34623	12447150	2590-01-466-3866	464	7
34623	12447151	2590-01-466-3824	464	4
34623	12447163-2	2590-01-465-7756	463	5
19207	12447165	5340-01-412-0867	162	6
34623	12447166	4710-01-413-8230	162	3
34623	12447171	2590-01-448-1105	315	7
		2590-01-448-1105	457	12
19207	12447172	5330-01-447-4762	103	3
34623	12447173	2590-01-412-2664	103	7
34623	12447175	2520-01-464-1772	103	1
19207	12447176	3040-01-409-2502	101	3
19207	12447177	5307-01-450-3072	127	11
		5307-01-450-3072	180	9
19207	12447180	3040-01-439-3662	127	7
19207	12460066		101	11
19207	12460067	3040-01-409-2501	134	4
19207	12460070	6150-01-413-7946	70	2
		6150-01-413-7946	481	2
19207	12460082	2540-01-414-1275	24	4
19207	12460083	5340-01-413-2689	24	11
34623	12460086	2990-01-414-4072	24	28
19207	12460087	2990-01-411-2728	24	1
34623	12460090	2990-01-411-3947	24	14
19207	12460091	2990-01-412-0142	24	16
19207	12460092-1	6220-01-413-9828	97	9
9C234	12460092-2	6220-01-412-6420	97	10
19207	12460093	5340-01-413-4486	105	24
19207	12460095	5330-01-413-2118	105	25
19207	12460097	6150-01-413-0853	81	19
19207	12460097-1	5935-01-442-8569	86	22
19207	12460098	6150-01-413-1847	82	1
19207	12460099	6150-01-413-1845	82	1
34623	12460102	2910-01-412-0047	14	28
34623	12460104	2910-01-411-2124	16	1
34623	12460105	2910-01-447-3911	16	13

CROSS REFERENCE INDEXES

PART NUMBER INDEX

CAGE	PART NUMBER	STOCK NUMBER	FIGURE NO	ITEM NO
19207	12460108-3	5330-01-409-1981	BULK	57
19207	12460108-3-AR		16	35
19207	12460108-5		16	18
34623	12460112	2520-01-413-2612	98	1
19207	12460116	5945-01-413-0886	50	12
19207	12460120	6150-01-412-7774	511	11
19207	12460123	5930-01-412-2836	66A	2
19207	12460124	3040-01-411-4191	66A	8
19207	12460125	5340-01-473-8626	66A	10
19207	12460130	5340-01-442-4876	86	30
19207	12460132	5935-01-412-9146	76	7
19207	12460136	5120-01-408-8173	511	13
19207	12460137	6150-01-410-8215	511	12
19207	12460140	5340-01-469-2979	16	15
34623	12460143	2510-01-444-3360	16	21
19207	12460145-1	5306-01-411-2338	16	28
		5306-01-411-2338	464	6
19207	12460145-2	5305-01-412-5995	16	29
		5305-01-412-5995	464	5
34623	12460146	3040-01-409-2500	101	9
19207	12460151	2530-01-413-1365	144	6
19207	12460156	7690-01-476-6507	354	8
19207	12460157	7690-01-476-6101	354	7
19207	12460159	5305-01-412-5994	144	12
		5305-01-412-5994	152	12
19207	12460160		66A	9
19207	12460163-1	2815-01-442-8077	1	2
19207	12460163-11		1	2
19207	12460163-3	2815-01-439-5882	1	2
19207	12460163-5		1	2
19207	12460163-7		1	2
19207	12460163-9		1	2
19207	12460167	2530-01-414-7844	144	6
19207	12460168	2510-01-187-3606	278	4
19207	12460176	2530-01-493-5859	167	13
19207	12460199	5340-01-448-1213	488	8
19207	12460205	9905-01-433-8554	354	6
34623	12460206	2590-01-188-7386	276	10
19207	12460208	5365-01-457-8947	273	24
19207	12460212	2540-01-475-3102	231	14
19207	12460218	5340-01-466-2611	485	22
19207	12460219	5340-01-466-2606	485	20
19207	12460220-1	5340-01-471-1040	485	12
19207	12460220-2	5340-01-466-1985	485	19
19207	12460221	5340-01-466-2451	485	11
19207	12460222	5340-01-466-2438	485	18
19207	12460223	5305-01-471-7623	485	21
34623	12460224	2540-01-439-7308	21	21
19207	12460228	5980-01-438-7452	47	2

CROSS REFERENCE INDEXES

PART NUMBER INDEX

CAGE	PART NUMBER	STOCK NUMBER	FIGURE NO	ITEM NO
34623	12460229	3040-01-444-5640	51	11
19207	12460230	2540-01-410-8789	51	10
19207	12460232	2530-01-423-1796	171	1
19207	12460233	2590-01-455-9123	332	13
19207	12460243	2540-01-432-9894	189	8
		2540-01-432-9894	190	8
34623	12460268	2540-01-432-9899	189	11
19207	12460270	5340-01-432-4870	189	5
19207	12460270-1	5340-01-485-6862	470	14
19207	12460285	2510-01-413-8045	182	17
19207	12460290	5340-01-457-5571	277	11
19207	12460305	4730-01-481-6278	177	4
19207	12460314	6680-01-466-7238	103	8
		6680-01-466-7238	400	4
19207	12460329	5340-01-451-5903	487	14
19207	12460330	5342-01-459-4992	487	1
19207	12460331	5340-01-469-5774	487	7
19207	12460374	2520-01-267-7371	148	11
19207	12460375	2520-01-297-5200	148	8
19207	12460385	5365-01-469-6343	332	37
34623	12460386	2540-01-463-3097	332	39
34623	12460399	2520-01-481-6120	50	1
19207	12460407-1	2540-01-481-9178	50	3
19207	12460407-2	2540-01-481-9194	50	2
19207	12460414	5340-01-477-9397	463	5
19207	12460434	2540-01-455-9308	332	18
19207	12460442	2920-01-473-1763	36	11
19207	12460455		64	23
19207	12460465	5340-01-499-0014	36	3
19207	12460490		1	2
19207	12460491	5340-01-442-0308	125	21
19207	12460492	4710-01-439-8165	125	4
19207	12460493	4710-01-439-8167	125	3
19207	12460495	5340-01-466-2620	480	11
19207	12460496	5340-01-466-2468	480	6
19207	12460498-1	6150-01-469-7941	480	34
19207	12460498-2	6150-01-469-7930	480	31
19207	12460498-3		480	16
19207	12460498-4	6150-01-470-7014	480	12
19207	12460502	5342-01-466-6280	476	14
19207	12460506	5340-01-457-0804	465	4
19207	12460507	5340-01-472-8534	98	11
19207	12460542-2	5340-01-433-0936	484	16
19207	12460543	5340-01-474-3279	484	8
19207	12460544	5340-01-474-0954	484	9
34623	12460547	2590-01-466-5250	468	6
19207	12460548	7690-01-466-5217	468	3
34623	12460550	2540-01-466-6114	462	1
19207	12463123	4820-01-495-7582	490A	3

CROSS REFERENCE INDEXES

PART NUMBER INDEX

CAGE	PART NUMBER	STOCK NUMBER	FIGURE NO	ITEM NO
19207	12469029	6150-01-473-8663	483	4
19207	12469032	7690-01-475-1197	482	1
19207	12469034	2540-01-475-3129	482	15
19207	12469035	5330-01-475-1671	482	5
19207	12469043	6150-01-474-9676	482	4
19207	12469044	7690-01-469-9591	466	4
19207	12469045	7690-01-469-9596	467	6
19207	12469046	4710-01-457-0590	467	10
19207	12469047	5999-01-471-0710	482	7
19207	12469048		1	2
19207	12469061	4720-01-470-3076	178	26
19207	12469064	6150-01-473-1178	469	3
19207	12469065-1	6150-01-473-1169	469	1
19207	12469065-2	6150-01-473-1174	470	5
19207	12469066	7690-01-474-5928	469	5
19207	12469067	7690-01-474-5935	470	6
19207	12469087		1	2
19207	12469100	7690-01-481-4906	355	4
19207	12469101	7690-01-481-4908	354	12
19207	12469106	3020-01-476-6520	175	4
19207	12469107	5340-01-481-0558	33	21
34623	12469156	5977-01-193-9931	68	11
19207	12469158-2	2920-01-469-6903	66	2
19207	12469160		1	2
19207	12469169	5340-01-498-7964	191	4
19207	12469170	5340-01-506-7986	191	24
34623	12469215	4730-01-491-8047	178	4
34623	12469216	4820-01-473-3580	178	3
34623	12469217	5340-01-473-4031	178	2
19207	12469306	2510-01-477-3968	179	15
34623	12469322	7690-01-476-2842	354	16
19207	12469323	9905-01-486-0051	355	4
34623	12469390	7690-01-488-5520	471	8
19207	12469434	2590-01-485-5455	471	12
19207	12469444		1	2
19207	12469471	3020-01-488-5635	175A	12
34623	12469472	3020-01-488-5638	34	22
34623	12469473	5365-01-488-5640	33A	11
		5365-01-488-5640	33B	7
34623	12469474	5340-01-488-5643	38A	6
34623	12469475	5340-01-488-6073	38A	1
19207	12469476	5340-01-497-2269	33A	6
34623	12469478	4710-01-488-6143	176A	1
34623	12469479	4710-01-488-6076	333	7
34623	12469489	4720-01-488-6156	175A	14
34623	12469491	4730-01-488-6163	333	41
34623	12469497	5340-01-488-6179	38A	7
34623	12469498	5340-01-488-6181	33A	8
19207	12469516	4710-01-495-4302	492	2

CROSS REFERENCE INDEXES

PART NUMBER INDEX

CAGE	PART NUMBER	STOCK NUMBER	FIGURE NO	ITEM NO
19207	12469517	4710-01-495-4268	492	1
19207	12469518	4730-01-496-3012	492	20
		4730-01-496-3012	490A	4
19207	12469519	4720-01-495-6202	492	24
19207	12469520	4720-01-496-3717	492	5
19207	12469521	2510-01-495-8335	347	9
19207	12469522	4940-01-496-2178	347	10
19207	12479192	6110-01-491-2158	49	4
19207	12480349	2520-01-150-2280	113	7
19207	12480516	2510-01-496-1886	347	5
19207	12480518	2510-01-496-1927	347	11
19207	12480523-1	5340-01-494-6794	462	5
19207	12480523-2	5340-01-495-7546	462	12
19207	12480551	3030-01-504-6408	490A	11
19207	12480553	5340-01-505-4197	490A	10
19207	12480559	3010-01-505-7205	490A	12
08805	1251	6240-00-019-0877	63	4
7X677	12534772	2930-01-444-6649	31	3
7X677	1254002	3110-01-413-8094	129	6
7X677	12550863	5310-01-462-4459	10	15
7X677	12551497	6685-01-444-9478	30	1
7X677	12551502	5330-00-830-1745	9	4
7X677	12551591	5330-01-434-8611	30	2
7X677	12551755	2815-01-430-2599	4	22
7X677	12553484		31	5
7X677	12553488	5330-01-476-3866	31	4
7X677	12554091	2930-01-460-7507	30	18
7X677	12554092	2815-01-455-8424	66A	14
7X677	12554488	2990-01-426-4425	66A	11
7X677	12554808		11	13
7X677	12554835	4710-01-446-9570	11	1
7X677	12556688	4730-01-473-3279	4	11
7X677	12559801	5340-01-493-2569	4	18
7X677	12567769		4	9
45152	126488A	5999-01-150-8808	86	7
93334	127951	4730-00-012-7951	143	18
		4730-00-012-7951	151	18
34281	12821501	2530-01-462-8079	157	22
		2530-01-462-8079	158	12
34281	12821801	2530-01-462-8068	158	12
34281	12835400		157	16
			158	11
06178	1295	4730-00-266-0538	366	14
14892	129599	5310-01-173-0941	163	5
96881	12L18F	3120-00-485-1017	165	3
		3120-00-485-1017	166	8
19728	12X-195		43	25
68505	12X-196		43	35
			43	57

CROSS REFERENCE INDEXES

PART NUMBER INDEX

CAGE	PART NUMBER	STOCK NUMBER	FIGURE NO	ITEM NO
19728	12X-198		45	80
19728	12X-201		45	58
10001	12Z3035-442	5310-00-595-6057	42	3
10001	12Z329PC92	4730-00-555-8292	16	43
06968	1301	5330-01-202-8360	273	20
18876	13048915-1	5342-01-104-7700	245	15
70082	1305A	2540-01-487-3626	329	3
08806	1309	6240-00-060-4707	65	25
62607	1309	6240-00-060-4707	65	10
12204	131482	5310-00-013-1482	215	10
70412	13194	2540-01-212-4959	327	2
97403	13219E0079	5510-00-270-6031	BULK	71
80132	13414-077	8145-00-485-8250	126	3
11862	134530	5310-01-186-7702	79	15
18876	13480720	5935-01-457-2965	282	8
18876	13493198		282	9
18876	13495871		282	1
18876	13495916	5340-01-467-2127	282	11
70082	1351	2540-01-410-8794	329	3
		2540-01-410-8794	461	3
62161	1351BAC10SL		505	9
24617	135927		273	11
27647	13698	9905-01-185-3207	358	3
24617	137195	5315-00-012-0123	170	1
21450	137197	5340-01-214-3615	333	6
24617	137397	4730-00-014-2432	10	12
76760	13766	2520-01-174-9554	128	18
		2520-01-174-9554	129	34
24617	138242	5305-00-366-3337	34	1
27647	13826	3120-01-306-3577	314	31
27647	13839	3020-01-209-4603	314	4
27647	13848	5330-01-211-0717	314	3
24617	138482	5310-01-462-2175	232	3
27647	13850	5305-01-211-3101	314	1
27647	13874	3020-01-209-4606	314	5
76760	13877	5325-01-358-7961	130	42
76760	13903	5306-01-167-4346	128	64
76760	13955	5325-01-358-7962	130	34
35510	13981	5305-01-272-9025	39	47
19728	13X-5549		45	5
68505	14-273	2920-01-248-2509	43	5
62826	1400164	5340-01-424-1300	138	2
		5340-01-424-1300	145	2
62826	1400165	5340-01-421-1423	138	4
		5340-01-421-1423	145	4
62826	1400166	5340-01-421-1415	138	15
		5340-01-421-1415	145	15
62826	1400269	2530-01-459-9497	139	10
		2530-01-459-9497	146	10

CROSS REFERENCE INDEXES

PART NUMBER INDEX

CAGE	PART NUMBER	STOCK NUMBER	FIGURE NO	ITEM NO
62826	1400270		139	2
			146	2
62826	1400271		139	4
			146	4
7X677	14022649	5330-01-156-5147	4	7
7X677	14022650	5342-01-160-4397	4	5
7X677	14022683	5330-01-150-7744	4	28
7X677	14022699	3040-01-163-7208	4	8
7X677	14022700	4730-01-150-0879	6	6
7X677	14028918	2930-01-147-4198	30	3
7X677	14028942	5325-01-151-6117	4	3
06968	1403	5330-01-213-1312	BULK	54
7X677	14033824	5340-01-159-6626	11	25
7X677	14033893	5340-01-151-9956	11	4
7X677	14033896	5340-01-148-8349	10	4
7X677	14033911	4710-01-149-5075	11	30
7X677	14033912	4710-01-148-9580	11	10
7X677	14033913	4710-01-148-9581	11	28
7X677	14033914	4710-01-149-5076	11	11
7X677	14033915	4710-01-153-1636	11	18
7X677	14033916	4710-01-150-0971	11	16
7X677	14033917	4710-01-149-5077	11	24
7X677	14033918	4710-01-148-9582	11	17
7X677	14033921	5340-01-150-4106	11	20
7X677	14033922	5340-01-150-6275	11	21
7X677	14033946	5307-01-150-1227	8	2
		5307-01-150-1227	30	5
7X677	14033953	5340-01-150-7774	11	29
7X677	14033955	5340-01-150-6026	11	15
7X677	14037948	5315-01-160-4642	128	10
		5315-01-160-4642	130	23
7X677	14037958	5330-01-159-2811	128	52
		5330-01-159-2811	129	25
7X677	14037981	5325-01-157-6764	128	25
		5325-01-157-6764	128	47
		5325-01-157-6764	130	41
7X677	14044937	3120-01-155-3509	128	42
7X677	14045263	5307-01-150-1549	31	13
7X677	14050425	5315-01-151-4180	9	5
7X677	14050444	4730-01-164-7028	8	8
7X677	14056165	5306-01-148-3666	30	10
7X677	14060130	5305-01-243-3759	476	17
7X677	14061569	4710-01-148-2659	11	1
11862	14063339		10	11
7X677	14063340	5340-01-167-7794	10	7
7X677	14066301	5342-01-166-1534	11	22
11862	14066305-11		11	9
7X677	14066307	5307-01-150-5992	365	17
7X677	14071059	2590-01-147-4285	4	2

CROSS REFERENCE INDEXES

PART NUMBER INDEX

CAGE	PART NUMBER	STOCK NUMBER	FIGURE NO	ITEM NO
7X677	14071080	5307-01-178-7445	31	10
7X677	14077122	6620-01-146-8006	30	1
7X677	14079550	5330-00-107-3925	104	11
7X677	14095677	3120-01-155-4470	128	40
7X677	14095678	3120-01-152-2613	128	73
7X677	14098632	4710-01-412-8611	11	10
7X677	14098633	4710-01-412-8615	11	28
7X677	14098634	4710-01-412-1669	11	11
7X677	14098635	4710-01-411-8488	11	18
7X677	14098636	4710-01-411-8489	11	16
7X677	14098637	4710-01-412-1667	11	24
34623	14098638	4710-01-411-8492	11	17
27647	14401	2590-01-185-7949	314	6
72452	1459-254	5310-00-171-1734	39	25
7X677	147500		119	7
27647	14916	3020-01-446-4387	458	12
34623	1494255		205	17
27647	14964	5330-01-306-7887	458	23
96881	14L14-F	2530-00-753-7285	169	21
06349	14L15-1-1XX	5340-01-195-8057	315	2
76760	15105	5340-01-290-6234	129	37
27647	15271	3120-01-435-2560	458	30
15434	153014	2920-00-848-3292	380	15
79470	1537	4730-01-004-8346	141	20
10138	15406-022	5305-00-054-5650	282	14
81300	15440	3030-00-899-4888	490	11
92867	15480200	2590-01-212-4955	153	15
92867	15541800	2590-01-265-3185	155	3
92867	15541802	2590-01-323-5153	155	9
76760	15556	2520-01-358-8883	132	22
76760	15574	5330-01-359-1292	130	35
27647	15597	3040-01-185-3201	314	8
27647	15598	5365-01-216-1166	314	10
27647	15603	5305-01-309-1521	458	1
27647	15604	5355-01-211-6991	314	37
		5355-01-211-6991	458	6
27647	15605	5331-01-445-5285	458	4
81343	15618240		BULK	60
7X677	15620999	4730-01-163-3544	11	2
7X677	15633464	5330-01-157-0856	8	6
7X677	15633465	2930-01-193-7802	31	3
27647	15634	5360-01-211-3163	314	39
27647	15643	3010-01-444-4018	458	11
27647	15647	3010-01-306-4113	458	24
24617	156471	5305-01-477-2824	225	38
27647	15654	3020-01-185-7948	314	7
27647	15655	2590-01-185-3116	314	24
27647	15657	7690-01-185-3208	358	1
27647	15663	2590-01-185-7947	314	30

CROSS REFERENCE INDEXES

PART NUMBER INDEX

CAGE	PART NUMBER	STOCK NUMBER	FIGURE NO	ITEM NO
27647	15664	2590-01-330-6102	314	13
27647	15665	6105-01-185-3187	314	27
27647	15667	4010-01-315-4179	314	15
27647	15668	5330-01-216-0288	314	11
7X677	1567442	5310-01-021-9027	167	10
27647	15686	5365-01-306-9955	458	9
24617	156966	5305-01-410-8386	210	16
		5305-01-410-8386	269	9
7X677	156971	5305-01-198-1621	272	14
24617	157125	5305-01-381-2305	231	2
76760	15715	5331-01-358-9545	129	28
7X677	157166	5305-01-185-0114	213	24
		5305-01-185-0114	225	15
		5305-01-185-0114	234	14
		5305-01-185-0114	246	6
		5305-01-185-0114	254	16
		5305-01-185-0114	260	20
		5305-01-185-0114	260	25
		5305-01-185-0114	287	7
		5305-01-185-0114	321	22
		5305-01-185-0114	326	5
76760	15720	3120-01-360-0977	130	36
7X677	15728526	5305-01-148-5915	8	4
70281	157432	5305-00-958-5246	411	16
79470	1582	4730-01-200-4277	141	9
		4730-01-200-4277	399	20
27647	15847		313	13
27647	15848		313	16
27647	15849	2590-01-192-3021	314	22
27647	15873	9905-01-185-3127	358	2
76760	15896	5330-01-415-9613	130	30
7X677	15957413	4730-01-456-5446	366	9
24617	159612	5305-01-359-0167	74	13
7X677	160046	5305-01-208-0274	325	10
24617	160052	5305-01-407-7713	318	9
		5305-01-407-7713	485	23
		5305-01-407-7713	487	2
7X677	160057	5305-01-185-8647	199	4
		5305-01-185-8647	225	19
		5305-01-185-8647	232	4
		5305-01-185-8647	462	9
24617	160069	5305-01-467-2711	486	1
27647	16013	2590-01-329-9910	314	2
27647	16064	5305-01-211-3100	314	14
76760	16064	3040-01-206-3876	128	15
76760	16081	5330-01-358-9533	130	31
76760	16104	5330-01-358-9540	130	30
79470	1611X3	4730-01-153-1871	345	40
		4730-01-153-1871	348	32

CROSS REFERENCE INDEXES

PART NUMBER INDEX

CAGE	PART NUMBER	STOCK NUMBER	FIGURE NO	ITEM NO
76760	16167	3120-01-359-6760	129	6
76760	16188		129	4
16764	16196390	5940-01-430-2764	50	6
16764	16197350	5962-01-430-0182	50	4
76760	16214	5330-01-358-9541	130	11
76760	16218	4720-01-358-6100	130	13
76760	16221	3040-01-360-4448	130	29
76760	16223		130	32
76760	16243	5325-01-358-5450	129	5
76760	16244	2520-01-358-8880	129	2
16764	16251210	5962-01-440-0368	50	4
16764	16266408	5962-01-470-4619	50	4
76760	16275	3040-01-358-8691	130	44
76760	16276	3020-01-358-8659	130	33
76760	16286	5310-01-358-7975	130	7
76760	16290	3020-01-358-8661	130	8
76760	16297	5365-01-358-4641	130	17
76760	16310	2590-01-358-7643	132	18
7X677	1635490	5306-01-149-6280	4	4
		5306-01-149-6280	8	5
		5306-01-149-6280	30	16
19220	16386(75)	5340-01-197-2736	269	18
76760	16397	5325-01-358-7958	129	10
76760	16433	3020-01-358-8657	130	15
76760	16447	5340-01-358-7940	132	29
76760	16449	3040-01-358-8596	132	17
76760	16456	5310-01-358-7978	132	25
76760	16457	3120-01-359-6764	132	27
27647	16464	4030-01-210-0691	314	16
76760	16466	5325-01-358-7959	129	17
76760	16467	5310-01-358-5461	129	16
76760	16472	2520-01-358-8701	132	13
76760	16473		132	16
76760	16474	2590-01-358-7644	132	19
7X677	164830	5305-01-255-3588	331	8
		5305-01-255-3588	332	43
76760	16538		129	14
76760	16550	3040-01-359-1117	129	19
27647	16554	3040-01-209-3376	314	28
76760	16651	2520-01-358-8878	130	3
76760	16662	3020-01-359-1211	129	18
76760	16686	4320-01-358-8608	130	40
7X677	167038	5305-01-250-6584	55	4
		5305-01-250-6584	56	2
24617	167163	5305-01-211-3786	95	34
59150	1675-182	4730-01-189-4600	489	2
76760	16754	5340-01-358-8000	129	30
76760	16756	5305-01-359-4586	129	27
30076	16779	5305-00-269-2811	392	8

CROSS REFERENCE INDEXES

PART NUMBER INDEX

CAGE	PART NUMBER	STOCK NUMBER	FIGURE NO	ITEM NO
76599	16HSS	4730-00-586-8463	27	8
57733	170677	5305-00-456-2582	345	8
		5305-00-456-2582	348	6
		5305-00-456-2582	348	15
76760	17071	5360-01-358-6563	129	29
7X677	172482	5305-01-236-4349	123	2
		5305-01-236-4349	124	14
		5305-01-236-4349	125	14
76760	17292	3040-01-359-1116	129	8
24617	173397	5305-01-411-4456	261	15
76760	17381	3040-01-358-8690	129	13
76760	17387	3040-01-358-8708	129	24
24617	174697	5306-00-425-8569	69	40
76760	17475	3120-01-417-8178	130	31
76760	17510	4710-01-358-8410	130	12
59150	1755-724		489	3
80064	1755683	5935-00-605-9322	85	11
		5935-00-605-9322	86	16
76760	17560	2520-01-358-8881	129	9
76760	17562		132	23
76760	17564	5360-01-358-5420	132	28
76760	17565	3040-01-358-8692	130	18
76760	17566	3020-01-359-1136	130	6
76760	17567	3110-01-359-6669	130	5
76760	17568	5310-01-358-7974	130	4
76760	17570	3020-01-358-8656	130	9
76760	17571	3020-01-359-2529	130	47
76760	17573	2520-01-358-8658	130	10
76760	17575	3020-01-358-8662	130	16
76760	17577	3020-01-358-8601	130	48
76760	17578		130	39
76760	17584	3040-01-359-1119	130	20
76760	17585	3040-01-359-1118	130	37
76760	17586	2520-01-358-8700	132	20
76760	17588	2520-01-358-8879	130	1
55787	1758CA		268	37
55787	1759CW		268	33
55787	1761CC		268	37
55787	1762CY		268	33
59150	1775-826	4720-01-188-3190	BULK	21
24617	178362	5310-00-061-0004	345	25
		5310-00-061-0004	348	36
76760	17844	5305-01-416-1269	130	27
76760	17855		129	14
7X677	178654	4730-00-287-1706	159	6
		4730-00-287-1706	160	20
		4730-00-287-1706	161	14
		4730-00-287-1706	162	22
		4730-00-287-1706	487B	8

CROSS REFERENCE INDEXES

PART NUMBER INDEX

CAGE	PART NUMBER	STOCK NUMBER	FIGURE NO	ITEM NO
76760	17869	3010-01-412-0673	129	19
10001	1788116	5310-00-498-6675	395	9
7X677	179148	5340-01-189-7640	161	2
		5340-01-189-7640	162	2
		5340-01-189-7640	487A	9
		5340-01-189-7640	487C	1
		5340-01-189-7640	487D	5
24617	179802	5306-01-150-8713	118	10
73183	179818	5305-01-122-0253	121	16
3M915	17C836R	5306-01-360-0926	438	4
51387	180021	5305-01-211-1405	198	13
29510	180022	5306-01-371-4685	198	15
27647	18135	3020-01-210-1365	314	33
27647	18136	3950-01-329-9890	314	29
27647	18138	3040-01-185-8011	314	9
27646	1833	5360-01-420-0480	458	8
27647	1834	3110-01-444-4020	458	7
21877	1851863-4	5310-01-117-3446	243	15
27647	18545	3120-01-377-5220	314	12
72582	186676	5305-01-016-5469	71	12
11862	186677	5305-00-844-1507	445	13
72582	186678	5305-00-989-0830	292	8
		5305-00-989-0830	293	19
		5305-00-989-0830	440	12
35510	1869	5315-01-265-8771	39	23
7X677	186965	5305-01-264-5864	46	7
24617	187838	5305-00-018-7838	88	44
		5305-00-018-7838	254	7
		5305-00-018-7838	254	10
		5305-00-018-7838	445	10
		5305-00-018-7838	487	8
29372	18L01-1X1AA	5340-01-206-5040	240	21
		5340-01-206-5040	243	22
71286	18L13-1-1AA	5340-01-190-0815	244	19
71286	18L13-1-AD	5340-01-255-9380	240	3
76760	19016	5330-01-413-3713	128	16
		5330-01-413-3713	129	31
72582	190171	5310-00-774-9073	390	4
		5310-00-774-9073	397	7
		5310-00-774-9073	397	22
24617	190254	5310-00-208-1918	88	4
		5310-00-208-1918	203	29
		5310-00-208-1918	272	4
		5310-00-208-1918	286	25
7X677	190254	5310-01-269-9245	411	6
24617	190652	4730-01-269-9530	336	1
50022	19111	2930-01-168-7911	5	2
76760	19134		130	32
76760	19140	2520-01-413-1904	130	29

CROSS REFERENCE INDEXES

PART NUMBER INDEX

CAGE	PART NUMBER	STOCK NUMBER	FIGURE NO	ITEM NO
13899	191410	4730-00-529-1237	384	3
72582	192481	5310-01-058-3353	382	10
		5310-01-058-3353	390	9
		5310-01-058-3353	392	11
7X677	193620	5320-01-218-0721	31	6
19728	19X-3437		45	78
19728	19X-4632		45	65
07482	1C817P63	5305-00-068-0508	446	36
02697	2-011N117370	5331-01-495-4801	493	7
02697	2-013N117370	5331-01-495-4810	492	21
		5331-01-495-4810	493	1
		5331-01-495-4810	490A	1
02697	2-015C557-70	5331-01-166-1712	493	3
02697	2-015N117370	5331-01-495-4814	492	23
		5331-01-495-4814	493	3
02697	2-016 N674-7	5331-00-984-3750	314	35
02697	2-017N117370	5331-01-495-4820	492	22
81343	2-2 130137B	4730-00-278-3721	178	23
95019	2-2-1209	2520-01-249-1506	137	17
95019	2-3-10021X		136	19
72447	2-3-10831X	2520-01-478-7282	137	19
95019	2-3-11491KX		136	19
95019	2-3-11781X	2520-01-386-3384	137	19
95019	2-3-7961KX	2520-01-189-0594	137	9
19220	2-300-P5	5360-01-282-9316	280	23
		5360-01-282-9316	281	23
95019	2-5-668X		136	8
			136	21
95019	2-5-848X		136	8
			136	21
			137	7
			137	21
95019	2-6-1318X		136	7
			136	20
95019	2-6-288X		136	7
			136	20
			137	6
			137	20
95019	2-60-1081		136	11
95019	2-60-1082		136	24
95019	2-60-108A2		136	24
95019	2-60-550		137	24
95019	2-60-550A2		137	24
95019	2-60-607		136	24
95019	2-60-899-1528		137	12
95019	2-60-899-1623		137	12
95019	2-60-996-1524		136	11
95019	2-70-59	5340-01-190-0807	136	1
		5340-01-190-0807	137	13

CROSS REFERENCE INDEXES

PART NUMBER INDEX

CAGE	PART NUMBER	STOCK NUMBER	FIGURE NO	ITEM NO
0AKY3	20-8021	3030-01-466-9476	32	3
0AKY3	20-9646	3030-01-488-5606	32	3
73680	200275-7	5330-01-180-9099	142	11
64648	2003-0015-3	5305-00-059-3659	43B	22
24234	200335	5305-01-270-5419	342	2
		5305-01-270-5419	496	26
		5305-01-270-5419	498	7
24234	201685	5305-01-278-7118	494	17
24234	201686	5305-01-296-7762	343	6
		5305-01-296-7762	494	1
01276	2023-6-10S	4730-00-728-2393	6	10
24234	202751	5310-00-274-8710	343	5
		5310-00-274-8710	497	2
		5310-00-274-8710	498	11
24234	202755	5310-01-270-2661	494	2
		5310-01-270-2661	495	13
		5310-01-270-2661	496	8
0DPV2	203400	2540-01-385-9000	327	31
0DPV2	203500	2540-01-385-9031	327	37
0DPV2	203600	2540-01-386-8790	327	32
24234	204434	3120-01-270-2646	496	4
24234	204531		496	29
7X677	2065616	5310-01-187-3485	193	2
20768	207-180201-0101	5340-01-264-6104	197	5
52854	207-320401-00	5340-01-185-4959	225	5
		5340-01-185-4959	226	40
62826	2080005		138	13
62826	2080007	5365-01-421-8382	138	14
		5365-01-421-8382	145	14
62826	2080021		145	13
62826	2090003		139	6
			146	6
62826	2090004		139	5
			146	5
29372	20L01-1-1AF	5340-01-197-1294	220	2
		5340-01-197-1294	230	20
		5340-01-197-1294	231	25
		5340-01-197-1294	235	16
71286	20L02-1-1AA	5340-01-087-4612	230	23
		5340-01-087-4612	231	28
		5340-01-087-4612	235	19
71286	20L56-1-1AA	5340-01-408-8508	261	9
19728	20X-4061		43	60
19728	20X-4063		43	58
19728	20X-4222		43	56
			45	14
68505	20X-4383	5305-01-429-9137	43	26
27647	21009	3040-01-307-6157	458	3
41024	21022013-150IN.		320	7

CROSS REFERENCE INDEXES

PART NUMBER INDEX

CAGE	PART NUMBER	STOCK NUMBER	FIGURE NO	ITEM NO
41024	21022103	5330-01-321-8622	BULK	53
41024	21022103-150		324	14
			324	36
41024	21022103-150IN		316	12
41024	21022103-150IN.		320	28
76760	21065	3040-01-413-4022	130	15
76760	21068	2520-01-413-1899	129	13
95019	211121X	5340-01-188-1017	136	17
		5340-01-188-1017	137	10
95019	211415X	3130-01-203-9870	136	12
55719	211FT	5120-00-152-2284	505	18
23862	2136455	5306-00-207-2221	64	4
		5306-00-207-2221	83	34
27647	21451	4010-01-231-5075	314	17
76760	21727	5330-01-415-9612	130	20
27647	21781	4030-01-209-7047	314	20
62826	2180007	2520-01-485-1813	138	12
		2520-01-485-1813	145	12
27647	21880	3040-01-209-3409	314	36
76760	21908	2520-01-409-2512	127	3
76760	21909	3040-01-420-1887	130	18
72962	21NE-040	5310-01-066-6759	19	18
		5310-01-066-6759	233	4
		5310-01-066-6759	237	6
		5310-01-066-6759	248	14
		5310-01-066-6759	249	12
		5310-01-066-6759	249	34
		5310-01-066-6759	252	9
		5310-01-066-6759	266	16
		5310-01-066-6759	389	12
72962	21NE083	5310-00-020-0358	438	11
70411	220C-J	4820-01-192-8030	399	2
10988	222-652	4730-01-193-7390	345	12
		4730-01-193-7390	348	17
0GE52	2227346	5340-01-456-2751	163	9
0GE52	2227677	5340-01-458-6386	163	8
0GE52	2228633	2530-01-459-5890	163	10
73370	2229379	5330-01-293-5345	163	4
73370	2230648	5340-01-293-5558	163	2
14894	2232134	2530-01-179-7589	163	1
73370	2232146		163	3
27647	22350	3110-01-444-4100	458	13
24617	223533	5306-01-492-7301	188	39
76760	22398	5365-01-446-9408	128	22
		5365-01-446-9408	130	25
7Z043	224N2V14	5340-01-474-2315	41	3
7X677	22511422	5340-01-148-7528	10	5
15946	22515630	5307-01-150-9538	11	6
		5307-01-150-9538	12	17

CROSS REFERENCE INDEXES

PART NUMBER INDEX

CAGE	PART NUMBER	STOCK NUMBER	FIGURE NO	ITEM NO
91816	2269B-2MM-.5	4820-01-430-4132	14	13
91816	2269B-2MM-3	4820-01-173-6883	14	27
62826	2280024		138	7
62826	2290033		139	7
			146	7
81834	23-0118-27	5305-01-218-1243	64	10
00724	23-01191-059	5305-00-993-1851	260	6
		5305-00-993-1851	289	27
80813	230-7/16-14	5355-01-196-2770	133	1
72582	23011420	5365-01-188-0782	4	23
73342	23015732	2520-01-170-9826	111	12
73342	23015880	5330-01-146-6053	111	3
73342	23017556	5315-01-152-9029	100	15
73342	23017763	2520-00-008-9987	109	2
06032	2310-0143-001	5310-01-121-1703	2	9
		5310-01-121-1703	174	6
		5310-01-121-1703	183	10
		5310-01-121-1703	184	2
		5310-01-121-1703	186	6
		5310-01-121-1703	285	7
		5310-01-121-1703	437	7
		5310-01-121-1703	438	3
		5310-01-121-1703	441	6
		5310-01-121-1703	442	2
		5310-01-121-1703	444	2
		5310-01-121-1703	453	11
		5310-01-121-1703	456	4
95019	231401	5306-01-190-5760	136	2
		5306-01-190-5760	137	14
76700	23244A	2990-01-188-3281	23	7
35510	23304	5305-01-272-8302	39	78
7X677	23500006	5307-01-187-0519	4	17
7X677	23500008	2910-01-189-8851	4	11
7X677	23500012	2930-01-188-3682	30	18
72825	23500024		10	10
7X677	23500032	5307-01-207-9004	31	9
7X677	23500035	2815-01-168-7909	8	7
11862	23500084		30	14
7X677	23500085		31	5
7X677	23500801	5306-01-422-8649	66A	12
7X677	23500832	5307-01-150-5991	8	3
72582	23502073	2815-01-168-7871	4	9
7X677	23502587	5330-01-378-8572	4	32
7X677	23503111		11	19
7X677	23503124	5325-01-160-4618	11	12
72582	23521131	5310-01-250-7679	4	20
78514	23716	5210-01-249-0369	510	22
12745	23728-1-74	5305-00-889-3001	43	39
62826	2390036		139	11

CROSS REFERENCE INDEXES

PART NUMBER INDEX

CAGE	PART NUMBER	STOCK NUMBER	FIGURE NO	ITEM NO
			146	11
62826	2390074		139	13
62826	2390076		139	12
			146	12
62826	2390077	2530-01-459-9492	KITS	16
62826	2390079		146	13
28520	2400	5325-01-289-7859	74	7
		5325-01-289-7859	91	13
		5325-01-289-7859	493	6
7X677	24200128	2835-01-478-4268	115	2
7X677	24200173	3040-01-447-7995	108	2
7X677	24200224	4730-01-460-5520	108	12
7X677	24200347	2590-01-460-8316	108	14
7X677	24200357	4320-01-456-6258	122	34
6X677	24200374	4710-01-477-3662	105	6
7X677	24200418	4820-01-474-8911	KITS	18
7X677	24200436	5360-01-476-2692	120	7
7X677	24200625		120	23
7X677	24200732	2520-01-481-7690	120	9
7X677	24200789	2520-01-459-5454	KITS	19
7X677	24200999		108	6
7X677	24201001		108	5
7X677	24201115	5330-01-456-2744	120	10
7X677	24201116	2520-01-456-6256	120	20
7X677	24201386		119	2
7X677	24201388	5330-01-456-7886	119	5
7X677	24201389		119	8
7X677	24202092	2520-01-456-5014	115	6
7X677	24202111	5330-01-410-7229	KITS	20
7X677	24202229	3040-01-480-7593	107	16
7X677	24202282	5340-01-456-2741	117	19
72590	24202329	2520-01-399-4691	105	1
7X677	24202346		107	9
7X677	24202357	5331-01-480-0748	115	26
7X677	24202358	5331-01-414-4161	115	22
7X677	24202359		112	5
7X677	24202360	5330-01-478-5994	114	13
7X677	24202361	5330-01-478-3900	114	14
7X677	24202552	2520-01-474-8868	114	12
7X677	24202577	5315-01-456-2737	117	7
7X677	24202578	5315-01-456-2739	117	7
7X677	24202579	5315-01-456-6254	117	7
7X677	24202580	5315-01-456-2738	117	7
7X677	24202581	5315-01-456-2740	117	7
7X677	24202582	5315-01-456-7882	117	7
7X677	24202583	5315-01-456-2743	117	7
7X677	24202611	5360-01-461-4931	108	9
7X677	24202631	3040-01-480-7595	110	15
7X677	24202646	2520-01-150-3932	109	3

CROSS REFERENCE INDEXES

PART NUMBER INDEX

CAGE	PART NUMBER	STOCK NUMBER	FIGURE NO	ITEM NO
		2520-01-150-3932	110	3
		2520-01-150-3932	111	16
		2520-01-150-3932	112	16
7X677	24202681		122	17
7X677	24202928		117	12
7X677	24202943	2520-01-459-8532	120	12
7X677	24202957		119	2
11862	24202959		119	21
7X677	24202963	2520-01-456-7888	120	9
7X677	24202966	2520-01-456-7883	114	8
7X677	24202976	2520-01-460-4961	114	11
7X677	24202985	3040-01-456-7881	117	16
7X677	24202986	5365-01-456-2742	117	10
7X677	24202987	5360-01-456-2745	117	13
7X677	24203366		105	2
7X677	24203377		105	18
7X677	24203397	3020-01-480-7299	107	8
7X677	24203398	3020-01-480-7630	107	17
7X677	24203399	3020-01-480-7321	107	17
7X677	24203400	3040-01-480-7309	107	13
7X677	24203499		112	3
7X677	24203511		114	16
61928	24203876	2990-01-399-1023	105	9
7X677	24204253	5330-01-478-5993	120	10
7X677	24204266		119	2
7X677	24204268	5330-01-473-8584	120	8
7X677	24204270	2520-01-475-9665	120	9
7X677	24204275	4710-01-477-9032	120	15
7X677	24204276	5340-01-491-7497	120	17
7X677	24204278	2520-01-482-4280	KITS	21
7X677	24204283	2520-01-481-8478	115	20
7X677	24204287	2520-01-409-1767	115	19
7X677	24204291	3040-01-480-7591	107	22
7X677	24204303	2520-01-465-8809	122	9
7X677	24204304		122	17
7X677	24204440	5330-01-086-5457	KITS	21A
7X677	24204441	5330-01-398-3724	KITS	22
7X677	24204449		KITS	23
7X677	24204472	1005-00-049-9324	KITS	24
7X677	24204497	2520-01-456-2736	114	6
7X677	24204835	2520-01-460-8323	102	1
7X677	24204957	2520-01-478-6604	112	7
7X677	24204961	2520-01-474-8871	110	8
7X677	24204962		107	10
7X677	24205103	5340-01-474-4011	105	4
		5340-01-474-4011	125	22
72590	24205114		105	1
7X677	24205123	5330-01-480-2502	105	21
72590	24205225		105	1

CROSS REFERENCE INDEXES

PART NUMBER INDEX

CAGE	PART NUMBER	STOCK NUMBER	FIGURE NO	ITEM NO
7X677	24205250	3040-01-462-1286	KITS	25
24617	24205251	5330-01-442-2874	KITS	26
7X677	24205348	2520-01-460-8301	KITS	27
7X677	24205373	5935-01-150-6319	100	4
7X677	24205398	5340-01-474-4006	122	9
7X677	24205551	2520-01-149-7861	106	11
		2520-01-149-7861	KITS	28
7X677	24205552	2520-01-474-7051	KITS	29
7X677	24205560	2520-01-481-8479	110	11
		2520-01-481-8479	112	17
7X677	24205722	5330-01-480-0750	114	15
7X677	24205786		122	7
7X677	24205818	2520-01-480-5436	115	9
7X677	24205827	2520-01-480-7565	114	9
7X677	24205833	5331-01-477-6762	122	32
7X677	24206024		120	24
7X677	24206025		120	23
7X677	24206571	5325-01-480-7328	115	10
7X677	24206749	5340-01-408-8525	KITS	30
7X677	24207130		114	17
7X677	24207168		105	2
7X677	24207180		114	17
7X677	24207247	3040-01-480-7297	107	7
7X677	24207501		112	4
7X677	24208527		105	2
72590	24208605		105	1
7X677	24208668		105	2
7X677	24208848	3110-01-478-4266	KITS	31
7X677	24208849	2520-01-481-8460	KITS	32
7X677	24208852	4320-01-485-7480	122	3
7X677	24209112	2520-01-488-7016	120	12
24617	24209225		110	5
7X677	24209244	2520-01-410-8072	110	13
7X677	24209276	5945-01-478-7862	119	24
7X677	24209311	2520-01-411-2749	110	12
7X677	24209475	3020-01-480-7302	107	8
7X677	24210080	2520-01-480-7556	110	15
7X677	24210468		105	15
7X677	24210605	5330-01-324-0906	122	6
7X677	24210954	3010-01-480-7597	KITS	33
7X677	24210955	5330-01-480-0752	KITS	34
7X677	24210956	4330-01-496-5720	KITS	35
7X677	24211287	4320-01-485-7480	122	3
72590	24211292		105	1
7X677	24211719	2520-01-480-7568	120	9
7X677	24212051	2520-01-480-7563	107	9
7X677	24213991	5365-01-480-6812	105	20
72590	24214094		105	1
72590	24214664		105	1

CROSS REFERENCE INDEXES

PART NUMBER INDEX

CAGE	PART NUMBER	STOCK NUMBER	FIGURE NO	ITEM NO
7X677	24215063	5340-01-209-7830	121	14
7X677	24217454	2520-01-481-3230	KITS	35A
7X677	24222077	5930-01-456-7880	120	13
7X677	24222160	3010-01-460-8309	115	14
7X677	24222173	2520-01-485-9405	112	2
24234	243046	6150-01-276-7698	54	4
24234	243047	2590-01-276-5071	54	3
24234	243048	2990-01-406-8738	54	5
16004	24338	9905-00-205-2795	211	17
35510	2434	5310-00-775-5139	39	37
24617	2436161	5310-01-102-3170	13	17
		5310-01-102-3170	14	23
		5310-01-102-3170	15	2
		5310-01-102-3170	16	2
		5310-01-102-3170	17	10
		5310-01-102-3170	27	13
		5310-01-102-3170	29	4
		5310-01-102-3170	43	47
		5310-01-102-3170	97	3
		5310-01-102-3170	98	14
		5310-01-102-3170	99	7
		5310-01-102-3170	124	11
		5310-01-102-3170	125	11
		5310-01-102-3170	153	2
		5310-01-102-3170	155	13
		5310-01-102-3170	169	28
		5310-01-102-3170	198	21
		5310-01-102-3170	202	25
		5310-01-102-3170	203	6
		5310-01-102-3170	204	2
		5310-01-102-3170	233	5
		5310-01-102-3170	241	4
		5310-01-102-3170	243	14
		5310-01-102-3170	244	8
		5310-01-102-3170	245	10
		5310-01-102-3170	245	17
		5310-01-102-3170	245	33
		5310-01-102-3170	246	17
		5310-01-102-3170	247	2
		5310-01-102-3170	247	14
		5310-01-102-3170	248	6
		5310-01-102-3170	249	11
		5310-01-102-3170	249	26
		5310-01-102-3170	249	35
		5310-01-102-3170	249	48
		5310-01-102-3170	250	6
		5310-01-102-3170	251	2
		5310-01-102-3170	254	2
		5310-01-102-3170	254	20

CROSS REFERENCE INDEXES

PART NUMBER INDEX

CAGE	PART NUMBER	STOCK NUMBER	FIGURE NO	ITEM NO
		5310-01-102-3170	255	2
		5310-01-102-3170	267	14
		5310-01-102-3170	269	12
		5310-01-102-3170	269	27
		5310-01-102-3170	270	2
		5310-01-102-3170	271	8
		5310-01-102-3170	272	9
		5310-01-102-3170	274	4
		5310-01-102-3170	274	9
		5310-01-102-3170	275	4
		5310-01-102-3170	276	2
		5310-01-102-3170	276	30
		5310-01-102-3170	277	22
		5310-01-102-3170	285	2
		5310-01-102-3170	286	38
		5310-01-102-3170	331	10
		5310-01-102-3170	332	3
		5310-01-102-3170	333	8
		5310-01-102-3170	398	17
		5310-01-102-3170	399	14
		5310-01-102-3170	400	12
		5310-01-102-3170	409	10
		5310-01-102-3170	411	2
		5310-01-102-3170	411	9
		5310-01-102-3170	413	4
		5310-01-102-3170	415	16
		5310-01-102-3170	430	23
		5310-01-102-3170	430	37
		5310-01-102-3170	440	9
		5310-01-102-3170	446	15
		5310-01-102-3170	453	9
		5310-01-102-3170	484	7
		5310-01-102-3170	486	6
24617	2436162	5310-01-119-1024	83	24
		5310-01-119-1024	144	5
		5310-01-119-1024	152	5
		5310-01-119-1024	153	20
		5310-01-119-1024	169	32
		5310-01-119-1024	205	26
		5310-01-119-1024	209	9
		5310-01-119-1024	225	3
		5310-01-119-1024	226	9
		5310-01-119-1024	231	8
		5310-01-119-1024	231	15
		5310-01-119-1024	234	5
		5310-01-119-1024	242	3
		5310-01-119-1024	250	21
		5310-01-119-1024	266	2
		5310-01-119-1024	268	11

CROSS REFERENCE INDEXES

PART NUMBER INDEX

CAGE	PART NUMBER	STOCK NUMBER	FIGURE NO	ITEM NO
		5310-01-119-1024	268	28
		5310-01-119-1024	277	6
		5310-01-119-1024	279	33
		5310-01-119-1024	284	2
		5310-01-119-1024	292	14
		5310-01-119-1024	328	9
		5310-01-119-1024	333	22
		5310-01-119-1024	338	26
		5310-01-119-1024	339	19
		5310-01-119-1024	374	8
		5310-01-119-1024	403	4
		5310-01-119-1024	409	2
		5310-01-119-1024	410	7
		5310-01-119-1024	413	2
		5310-01-119-1024	414	6
		5310-01-119-1024	415	2
		5310-01-119-1024	416	6
		5310-01-119-1024	417	5
		5310-01-119-1024	418	5
		5310-01-119-1024	419	6
		5310-01-119-1024	420	2
		5310-01-119-1024	421	2
		5310-01-119-1024	422	2
		5310-01-119-1024	423	2
		5310-01-119-1024	428	6
		5310-01-119-1024	439	2
		5310-01-119-1024	440	2
		5310-01-119-1024	445	1
		5310-01-119-1024	463	11
24617	2436163	5310-01-412-4013	15	24
		5310-01-412-4013	16	26
		5310-01-412-4013	23	21
		5310-01-412-4013	30	4
		5310-01-412-4013	35	4
		5310-01-412-4013	36	14
		5310-01-412-4013	38	14
		5310-01-412-4013	99	17
		5310-01-412-4013	144	5
		5310-01-412-4013	144	15
		5310-01-412-4013	152	5
		5310-01-412-4013	152	15
		5310-01-412-4013	174	15
		5310-01-412-4013	202	36
		5310-01-412-4013	203	19
		5310-01-412-4013	270	20
		5310-01-412-4013	276	11
		5310-01-412-4013	278	10
		5310-01-412-4013	283	7
		5310-01-412-4013	33A	15

CROSS REFERENCE INDEXES

PART NUMBER INDEX

CAGE	PART NUMBER	STOCK NUMBER	FIGURE NO	ITEM NO
		5310-01-412-4013	33B	3
		5310-01-412-4013	341	7
		5310-01-412-4013	38A	2
		5310-01-412-4013	409	7
		5310-01-412-4013	410	5
		5310-01-412-4013	411	13
		5310-01-412-4013	412	5
		5310-01-412-4013	414	3
		5310-01-412-4013	415	12
		5310-01-412-4013	416	4
		5310-01-412-4013	425	15
		5310-01-412-4013	426	13
		5310-01-412-4013	427	14
		5310-01-412-4013	428	4
		5310-01-412-4013	456	19
		5310-01-412-4013	462	3
		5310-01-412-4013	463	2
		5310-01-412-4013	464	2
		5310-01-412-4013	476	3
		5310-01-412-4013	490A	5
11862	2436165	5310-01-121-1703	184	2
		5310-01-121-1703	188	23
		5310-01-121-1703	242	7
		5310-01-121-1703	271	17
		5310-01-121-1703	271	29
		5310-01-121-1703	315	6
24617	2436165	5310-01-121-1703	26	11
		5310-01-121-1703	185	6
		5310-01-121-1703	186	2
		5310-01-121-1703	187	12
24617	2436167	5310-01-151-7347	140	7
		5310-01-151-7347	147	7
		5310-01-151-7347	170	20
		5310-01-151-7347	185	4
		5310-01-151-7347	187	3
		5310-01-151-7347	195	11
		5310-01-151-7347	196	2
		5310-01-151-7347	441	3
		5310-01-151-7347	457	19
		5310-01-151-7347	470	11
23862	2436168	5310-01-147-4052	152	2
24617	2436168	5310-01-147-4052	166	2
		5310-01-147-4052	183	7
		5310-01-147-4052	188	17
		5310-01-147-4052	188	29
		5310-01-147-4052	470	10
24617	24504716	5305-01-459-9564	463	17
27647	24563	3010-01-444-4019	458	14
20969	246X5X4	4730-00-277-6347	366	24

CROSS REFERENCE INDEXES

PART NUMBER INDEX

CAGE	PART NUMBER	STOCK NUMBER	FIGURE NO	ITEM NO
		4730-00-277-6347	384	15
27647	24800	6110-01-434-5562	458	36
27647	24832	3020-01-444-1359	458	10
72983	248X4	4730-00-900-3296	178	23
19220	249	5340-01-209-4870	280	11
		5340-01-209-4870	281	11
7X677	25042462	2990-01-147-9284	7	3
70040	25043364	4820-01-192-7678	399	18
80463	25055210	4730-01-189-8854	15	12
		4730-01-189-8854	16	11
61928	251-591	2930-01-353-5794	31	3
93334	2538608	3040-01-192-3673	488	19
16236	2540V0751	2540-01-314-9378	230	2
		2540-01-314-9378	235	2
7X677	2551880	4730-00-871-6729	10	8
80138	256A		56	3
53711	2590174	2910-00-930-9367	366	25
		2910-00-930-9367	384	6
99167	25932	5310-00-167-0834	279	27
7X677	26002516	5330-01-324-8260	172	19
52788	26049931		172	5
24234	260790	2930-01-282-2524	498	9
28527	2616950G001	5310-00-615-1556	43B	24
35510	26351	5310-01-210-0819	39	55
24234	265330	4140-01-269-7101	494	18
27647	26781	2590-01-185-3115	314	32
28520	2683	5340-01-203-1980	197	18
		5340-01-203-1980	199	61
		5340-01-203-1980	227	8
24617	271153	5305-01-393-6311	135	7
		5305-01-393-6311	160	22
		5305-01-393-6311	162	10
		5305-01-393-6311	487A	12
		5305-01-393-6311	487C	2
		5305-01-393-6311	487D	3
72582	271163	5310-01-069-5243	74	4
		5310-01-069-5243	282	16
		5310-01-069-5243	435	5
		5310-01-069-5243	453	7
24617	271168		92	16
			339	3
11862	271169	5310-00-124-9265	325	20
24617	271169	5310-00-124-9265	85	23
		5310-00-124-9265	95	32
		5310-00-124-9265	207	6
		5310-00-124-9265	227	16
		5310-00-124-9265	282	4
		5310-00-124-9265	338	31
		5310-00-124-9265	416	30

CROSS REFERENCE INDEXES

PART NUMBER INDEX

CAGE	PART NUMBER	STOCK NUMBER	FIGURE NO	ITEM NO
72582	271169	5310-00-124-9265	19	14
		5310-00-124-9265	52	12
		5310-00-124-9265	56	15
		5310-00-124-9265	58	12
		5310-00-124-9265	59	8
		5310-00-124-9265	75	26
		5310-00-124-9265	77	7
		5310-00-124-9265	79	23
		5310-00-124-9265	83	8
		5310-00-124-9265	84	8
		5310-00-124-9265	88	9
		5310-00-124-9265	231	22
		5310-00-124-9265	254	24
		5310-00-124-9265	258	2
		5310-00-124-9265	259	7
		5310-00-124-9265	260	22
		5310-00-124-9265	262	12
		5310-00-124-9265	263	8
		5310-00-124-9265	289	14
		5310-00-124-9265	318	7
		5310-00-124-9265	321	21
		5310-00-124-9265	323	16
		5310-00-124-9265	326	7
		5310-00-124-9265	327	41
		5310-00-124-9265	338	7
		5310-00-124-9265	400	10
		5310-00-124-9265	410	11
		5310-00-124-9265	410	26
		5310-00-124-9265	412	20
		5310-00-124-9265	414	13
		5310-00-124-9265	416	17
		5310-00-124-9265	426	19
		5310-00-124-9265	427	19
		5310-00-124-9265	428	11
		5310-00-124-9265	435	6
		5310-00-124-9265	445	3
		5310-00-124-9265	462	15
		5310-00-124-9265	462	16
		5310-00-124-9265	468	12
		5310-00-124-9265	477	6
		5310-00-124-9265	485	13
		5310-00-124-9265	488	9
24617	271172	5310-01-152-0598	51	4
		5310-01-152-0598	69	34
		5310-01-152-0598	77	13
		5310-01-152-0598	83	15
		5310-01-152-0598	83	31
		5310-01-152-0598	88	17
		5310-01-152-0598	88	29

CROSS REFERENCE INDEXES

PART NUMBER INDEX

CAGE	PART NUMBER	STOCK NUMBER	FIGURE NO	ITEM NO
		5310-01-152-0598	89	11
		5310-01-152-0598	95	40
		5310-01-152-0598	155	6
		5310-01-152-0598	214	9
		5310-01-152-0598	304	7
		5310-01-152-0598	307	6
		5310-01-152-0598	308	15
		5310-01-152-0598	313	11
		5310-01-152-0598	320	18
		5310-01-152-0598	320	31
		5310-01-152-0598	339	29
		5310-01-152-0598	378	19
		5310-01-152-0598	410	33
		5310-01-152-0598	412	14
		5310-01-152-0598	414	22
		5310-01-152-0598	416	25
		5310-01-152-0598	428	24
		5310-01-152-0598	443	14
		5310-01-152-0598	453	3
		5310-01-152-0598	457	13
		5310-01-152-0598	480	23
24617	271175	5310-01-333-5245	62	29
		5310-01-333-5245	379	50
		5310-01-333-5245	485	27
24617	271184	5310-00-933-4310	282	7
		5310-00-933-4310	403	3
		5310-00-933-4310	433	2
		5310-00-933-4310	435	3
28520	2723	5340-01-273-2380	59	21
7X677	272474	5310-01-204-1039	73	4
		5310-01-204-1039	434	2
		5310-01-204-1039	435	2
24617	272739	5310-01-317-8164	395	8
93061	272NTA-8-6	4730-01-119-6895	15	22
		4730-01-119-6895	16	17
7X677	274233	5305-01-211-6049	49	3
11862	274244	5331-00-935-9136	3	3
		5331-00-935-9136	400	2
24617	274244	5331-00-935-9136	479	3
73342	274267	2010-00-937-5599	122	26
24234	274278	6105-01-265-8634	494	19
		6105-01-265-8634	498	14
73342	274613	5325-00-349-8518	121	15
7X677	274707	5305-01-187-8757	46	9
		5305-01-187-8757	331	13
		5305-01-187-8757	332	27
27647	27569	4010-01-426-4536	458	39
70485	2758	5325-00-249-6345	333	33
62826	277-0027	3040-01-189-1637	145	7

CROSS REFERENCE INDEXES

PART NUMBER INDEX

CAGE	PART NUMBER	STOCK NUMBER	FIGURE NO	ITEM NO
14892	2771302	2530-01-179-7590	164	1
62826	2780035		138	9
62826	2780037		138	9
27647	27855	2590-01-432-2691	457	17
62826	2790024		139	9
62826	2790026		139	9
62826	2790028		146	9
93061	279NTA-8-6	4730-01-091-2809	15	13
		4730-01-091-2809	16	12
62826	287-0006	2530-01-191-8741	KITS	36
28520	2874	5325-01-289-5038	92	19
35510	2879		39	36
62826	2880015		138	3
			145	3
62826	2880016		138	10
			145	10
62826	2880019	2530-01-394-6168	KITS	37
62826	2890019		139	3
			146	3
86403	2892399	6680-00-269-0335	488	22
81834	29-1063-02	6220-01-216-9337	64	6
24234	290081		55	14
24234	290101	5340-01-282-0469	498	2
24234	290227	4730-00-230-2959	496	25
24234	290249	5340-01-276-6738	496	18
24234	290308	5340-01-296-1736	494	6
24234	290309	5340-01-289-7793	494	16
41387	2938-2	5331-00-580-6586	470	3
73342	29505789	5365-01-378-1755	104	12
27647	29519	4030-01-426-4537	458	41
73342	29520052	5310-01-143-0512	12	20
		5310-01-143-0512	23	22
		5310-01-143-0512	127	14
73342	29530330	2520-00-172-1947	109	4
		2520-00-172-1947	110	4
		2520-00-172-1947	111	17
77060	2965718	5940-01-270-3701	93	4
77060	2973850	5940-01-270-3700	92	2
		5940-01-270-3700	93	6
		5940-01-270-3700	95	7
		5940-01-270-3700	96	11
62826	298-0105	2520-01-382-8874	138	1
62826	298-0106	2520-01-382-8728	138	1
62826	298-0107	2520-01-383-2387	145	1
61361	298-212-93	5305-00-719-5241	397	17
77060	2984172	5940-01-270-3702	95	15
77066	2984172	5940-01-270-3702	96	4
77066	2984576	5940-01-289-5955	96	14
62826	2990054	2530-01-459-9493	KITS	38

CROSS REFERENCE INDEXES

PART NUMBER INDEX

CAGE	PART NUMBER	STOCK NUMBER	FIGURE NO	ITEM NO
62826	2990055	2530-01-459-9494	KITS	39
62826	2990056	2530-01-459-9495	KITS	40
73680	2994-2106	5330-01-180-9099	143	11
		5330-01-180-9099	150	11
		5330-01-180-9099	151	11
73680	29960-0511	5330-01-358-9532	128	59
		5330-01-358-9532	129	31
11083	2D1959	6240-00-019-3093	60	6
		6240-00-019-3093	61	6
1E045	3-10	5340-01-260-9942	217	2
73957	3-32X3-4LG	5315-00-828-5487	4	13
19220	3-400-L (25)	5340-01-198-5455	269	19
19220	3-400-R	5340-01-199-6103	269	19
7Z588	30024H	4730-00-908-3193	379	39
		4730-00-908-3193	496	15
92878	30040-01	6105-00-512-9225	333	13
24234	300442	5331-01-160-9857	467	7
		5331-01-160-9857	493	1
		5331-01-160-9857	496	11
24234	300448	5331-01-061-3000	467	9
		5331-01-061-3000	493	7
		5331-01-061-3000	494	12
		5331-01-061-3000	496	16
24234	300506-72.0	5640-01-288-5547	493	5
24234	300515	4720-01-282-0143	496	22
60602	30071		21	8
60602	30073	5305-01-290-8206	21	10
51377	3018-01265-01	5331-01-192-8892	34	6
51377	3018-01339-01	5330-01-247-8438	34	7
51377	3018-01425-01	5330-01-252-0461	34	13
92878	30250	2540-01-190-7079	333	11
27647	30260	3010-01-429-5333	458	29
92878	30266	6105-01-211-6635	333	12
27647	30274	3120-01-447-8658	458	21
		3120-01-447-8658	458	33
27647	30275	5330-01-446-4696	458	20
		5330-01-446-4696	458	32
27647	30277	3120-01-447-8663	458	18
51377	3029-01371-01	5310-01-194-0481	34	3
51377	3030-00364-01	5310-01-190-4607	34	15
27647	30328	5305-01-448-5080	458	22
7Z588	30448-D	5315-01-409-1662	488	24
51377	3051-01405-01	5307-01-190-5854	34	12
00303	308	6240-00-155-7790	65	16
04NP3	309-552-321	2610-01-171-4746	168	1
12603	30H-18	5340-01-017-4630	13	3
		5340-01-017-4630	14	3
96795	31-119918-210	5305-00-059-3660	59	23
27647	31262	3040-01-446-3689	458	5

CROSS REFERENCE INDEXES

PART NUMBER INDEX

CAGE	PART NUMBER	STOCK NUMBER	FIGURE NO	ITEM NO
27647	31293	5340-01-486-1005	458	44
27647	31585	5340-01-430-0037	458	43
27647	31597	5935-01-431-5656	458	37
27647	31604	5945-01-431-5195	458	38
27647	31625	5305-01-428-6635	458	46
24234	319032	4720-01-265-3238	343	12
82465	31WLF3816	5310-00-355-5645	44	7
27647	32062	3120-01-435-2495	458	34
27647	32208	5365-01-434-0186	458	27
27647	32209	3040-01-446-3684	458	15
27647	32231	2590-01-446-5962	458	16
27647	32235	6105-01-434-1729	458	47
27647	32236	3950-01-435-1014	458	31
27647	32237	2590-01-446-5957	458	19
27647	32239	3020-01-446-3695	458	25
81495	330 2000	5310-00-087-7493	401	8
01347	330-10-10R	4820-01-005-2994	363	3
10001	33G1724	5325-00-276-6343	70	14
19220	34-4974-51X	5340-01-259-8600	269	24
50380	34017-14-AB	5310-01-130-9065	471	9
62226	34068-02	5355-01-481-5517	231	17
27647	34384	3040-01-444-1756	458	2
46156	34403-35-1	5315-01-188-4490	225	37
		5315-01-188-4490	226	20
39428	3458T44	1640-01-308-5097	BULK	50
96152	346-786	4820-01-210-3488	15	4
		4820-01-210-3488	16	4
27647	34848	5365-01-426-6643	458	26
68505	35-762	2920-01-168-4127	35	18
		2920-01-168-4127	43	54
02768	354-280308-00-00 78	5325-01-197-3460	153	22
		5325-01-197-3460	332	21
39428	3543T41	4030-01-124-8201	353	5
7X677	354501	4730-01-148-2758	31	2
24234	354674	5330-01-282-2208	498	13
24234	354944	5330-01-282-2214	496	12
		5330-01-282-2214	498	1
60602	35745-44	2590-01-199-5423	21	15
60602	35752-12		21	11
0AT62	35A2C5	5305-00-225-3843	446	14
24975	36-630	5330-01-190-7510	KITS	41
7X677	360582	5360-01-165-1563	4	16
98853	361130-EA02	5940-01-440-0097	93	14
98853	361230-D	5940-01-436-4561	93	15
60602	36162-23	2590-01-466-4397	468	2
45152	362AX1	5310-00-080-6004	38	17
35510	36895	5310-00-045-3299	39	77
35510	36912	5310-01-143-1679	39	76

CROSS REFERENCE INDEXES

PART NUMBER INDEX

CAGE	PART NUMBER	STOCK NUMBER	FIGURE NO	ITEM NO
27647	36974	5305-01-448-5074	458	17
76599	36HSS	4730-00-909-8627	17	16
		4730-00-909-8627	29	8
94222	37-10-071-10	5340-00-492-2313	208	11
68505	37-123	5330-01-190-7509	KITS	42
7X677	3702366	2805-00-336-1716	4	15
7X677	3704871	5340-01-194-5294	4	14
7X677	3719599	2910-00-493-2138	9	3
7X677	3739798	4730-01-182-6565	30	15
		4730-01-182-6565	31	7
7X677	3787240	2520-01-159-7757	128	80
		2520-01-159-7757	129	38
7X677	3790768	5310-01-147-8743	490	5
19728	37X-4914		45	76
15434	3802287	2920-01-420-7894	33	14
7X677	3816659	5340-01-149-4434	399	8
81795	38266	5310-00-802-4701	482	10
73342	3829139	5306-00-024-6580	104	8
39428	3933T22	5340-01-125-1682	353	7
55787	393835	5307-01-140-6594	268	38
73342	3947086	5330-00-001-4904	111	4
81349	39TB10F	5940-00-983-6105	52	17
11083	3M9449	5940-00-705-6732	41	7
81343	4-060110B	4730-00-011-4627	348	16
81343	4-4 130139C	4730-01-347-7342	385	6
81343	4-4 130239C(CAD)	4730-01-209-0845	135	4
81343	4-4-4 130438B	4730-00-471-3102	366	13
81343	4-4-4 140438C	4730-01-048-9769	384	4
61864	400	5325-00-281-8642	316	3
31272	40000-10	2540-01-271-8010	263	4
24234	400084	4130-01-265-8726	496	1
92871	4004616	5310-01-189-8485	165	8
25341	40210		507	1
51377	4026-38368-01	2930-01-189-8643	34	18
24234	403475	4720-01-265-3213	336	2
51377	4040-38442-01		34	8
24234	404179	5930-01-266-1809	494	8
24234	404180	5930-01-266-3917	496	30
24234	404187	4820-01-265-3156	492	10
24234	404188	4820-01-265-3159	492	12
51377	4043-38443-01	2930-01-189-1744	34	5
24234	405475	4820-01-265-3149	494	7
		4820-01-265-3149	496	31
24234	405565	6680-01-265-8698	496	19
24234	405680	4710-01-265-3152	496	17
24234	405681	4710-01-285-5123	496	20
24234	405682	4710-01-265-3230	493	8
24234	405683	4710-01-265-3276	493	4
24234	405684	4710-01-265-3277	493	2

CROSS REFERENCE INDEXES

PART NUMBER INDEX

CAGE	PART NUMBER	STOCK NUMBER	FIGURE NO	ITEM NO
24234	405695	4720-01-282-0160	496	24
08627	406CD	5340-00-050-9077	141	24
24234	407234	2540-01-265-3266	343	21
51377	4073-38424-01		34	16
51377	4079-38441-01		34	19
82386	410-63	5305-00-582-9501	37	8
		5305-00-582-9501	75	24
		5305-00-582-9501	77	5
		5305-00-582-9501	83	10
		5305-00-582-9501	84	4
		5305-00-582-9501	85	22
		5305-00-582-9501	88	7
		5305-00-582-9501	216	4
		5305-00-582-9501	327	43
		5305-00-582-9501	468	13
		5305-00-582-9501	488	6
24234	410909	4130-01-300-6350	494	3
15434	410912	2540-01-291-1043	343	2
24234	410913	2540-01-265-3234	54	1
24234	410914 ITEM 8	5930-01-311-3610	54	10
24234	410915	2510-01-276-5058	54	8
		2510-01-276-5058	55	1
24234	410917	4130-01-282-1895	496	2
24234	410918	5340-01-281-7795	496	5
24234	410920	4130-01-269-4921	496	27
24234	410921	2540-01-285-6066	498	4
24234	410922	2540-01-296-9358	343	13
24234	410925	4420-01-276-5050	495	15
25341	41102	6680-01-372-5748	506	3
95019	41292	5330-01-174-8146	148	7
82978	4167924	5310-01-174-8091	128	20
		5310-01-174-8091	129	36
0U276	41945	5342-01-246-1120	17	1
76760	42054	2520-01-358-7698	131	5
25341	42106	5120-01-373-8836	507	2
25341	42107	5120-01-373-5983	508	3
25341	42109	5120-01-373-4989	506	2
86403	4210973	5310-01-186-5237	128	19
		5310-01-186-5237	128	63
25341	42113	5120-01-373-5984	508	4
25341	42124	5120-01-373-4985	508	2
06968	42130156-7		29	5
24161	4219-3681	4720-01-163-7833	BULK	11
24617	423531	5305-00-403-5130	345	14
		5305-00-403-5130	348	5
		5305-00-403-5130	348	13
24617	425570	5306-00-042-5570	84	5
		5306-00-042-5570	88	46
21450	426687		375	3

CROSS REFERENCE INDEXES

PART NUMBER INDEX

CAGE	PART NUMBER	STOCK NUMBER	FIGURE NO	ITEM NO
			375	6
			378	3
			378	6
7X677	427566	5306-00-844-0036	438	5
		5306-00-844-0036	444	5
24617	427583	5306-01-360-1129	440	7
20796	43-5791	3030-00-379-2815	32	2
25341	43204	5120-01-373-5985	506	4
25341	43205	5120-01-373-4987	507	3
25341	43208	5120-01-373-4984	508	5
25341	43210	5120-01-373-8840	508	1
25341	43305	5120-01-373-4982	506	1
35510	4340	5310-00-429-3135	39	43
25341	43501	5120-01-373-4988	507	4
70655	4375	5342-01-289-7708	295	12
24161	4377	4720-00-139-3968	BULK	9
31272	43977-12	5340-01-271-4282	279	30
24617	442393	4730-01-457-0727	487A	14
		4730-01-457-0727	487C	3
72582	442393	4730-01-457-0727	160	7
		4730-01-457-0727	161	7
		4730-01-457-0727	162	8
24617	446188	5310-00-044-6188	370	25
24617	446212	5310-00-044-6212	370	27
31272	44647-10	5340-01-203-5634	243	10
		5340-01-203-5634	270	38
31272	44647-11	5340-01-206-7780	241	1
31272	44647-12	5340-01-198-2255	246	10
		5340-01-198-2255	247	20
		5340-01-198-2255	248	11
		5340-01-198-2255	249	14
31272	44647-18	5340-01-265-8923	258	7
		5340-01-265-8923	259	3
		5340-01-265-8923	260	3
		5340-01-265-8923	262	11
31272	44647-19	5340-01-272-8431	259	8
		5340-01-272-8431	264	4
31272	44647-21	5340-01-272-2801	218	4
31272	44647-22	5340-01-272-3403	257	7
31272	44647-23	5340-01-287-6352	262	15
31272	44648-13	5340-01-203-6539	248	1
31272	44648-14	5340-01-203-2707	248	8
31272	44648-15	5340-01-203-4646	247	27
31272	44648-17	5340-01-203-2708	247	28
		5340-01-203-2708	446	23
		5340-01-203-2708	449	5
31272	44648-19	5340-01-203-6538	249	28
31272	44648-20	5340-01-198-2254	249	24
31272	44648-21	5340-01-198-2257	249	45

CROSS REFERENCE INDEXES

PART NUMBER INDEX

CAGE	PART NUMBER	STOCK NUMBER	FIGURE NO	ITEM NO
31272	44648-22	5340-01-198-2256	249	43
31272	44648-24	5340-01-260-9940	286	13
31272	44648-25	5340-01-256-0942	430	11
31272	44648-26	5340-01-255-2812	430	9
		5340-01-255-2812	446	18
		5340-01-255-2812	449	10
35510	4465	5305-00-601-7729	39	7
31272	44672-10	2590-01-185-4391	240	16
31272	44672-11	2590-01-185-4390	240	16
		2590-01-185-4390	429	26
31272	44702-10	5340-01-203-6542	319	6
		5340-01-203-6542	320	4
		5340-01-203-6542	322	5
		5340-01-203-6542	323	4
		5340-01-203-6542	324	5
		5340-01-203-6542	326	4
		5340-01-203-6542	375	7
87541	4485(US 27)	5340-01-278-8588	213	39
		5340-01-278-8588	214	32
7X677	448655	5305-01-206-8401	77	12
		5305-01-206-8401	88	12
		5305-01-206-8401	477	1
87541	4487(US26D)	5310-01-288-1257	213	34
		5310-01-288-1257	214	27
31272	44877	5340-01-199-3510	375	26
31272	44884	5340-01-197-6753	268	39
31272	44931-11	2590-01-256-3628	429	25
31272	44943	5340-01-198-3457	248	13
24617	449617	5305-01-478-3387	469	12
31272	44996-10	5340-01-266-3844	287	18
31272	45053-10	5340-01-199-1662	268	14
31272	45053-11	5340-01-198-2253	271	30
		5340-01-198-2253	274	16
31272	45057-10	5340-01-256-4656	272	18
31272	45065-10	5340-01-209-7761	250	3
31272	45079-10	2540-01-271-5071	263	1
31272	45084-11	5340-01-265-8925	256	5
		5340-01-265-8925	257	10
		5340-01-265-8925	289	1
31272	45084-12	5340-01-287-8761	260	15
31272	45085-11	5340-01-266-3846	287	9
31272	45087-10	5340-01-282-2670	265	4
		5340-01-282-2670	289	16
31272	45094-10	5340-01-272-3402	287	10
31272	45096-10	5340-01-198-5165	246	4
		5340-01-198-5165	450	7
31272	45096-11	5340-01-199-1663	246	3
31272	45096-13	5340-01-257-2644	430	10
31272	45160-10	5340-01-207-0610	241	2

CROSS REFERENCE INDEXES

PART NUMBER INDEX

CAGE	PART NUMBER	STOCK NUMBER	FIGURE NO	ITEM NO
24617	451786	5340-01-162-5883	108	10
31272	45187		250	1
31272	45188-10	4530-01-211-5328	250	4
31272	45189-10	2590-01-210-0176	250	2
31272	45243-10	5342-01-280-6264	288	25
31272	45262-11	5340-01-255-9918	280	2
		5340-01-255-9918	281	2
31272	45262-13	5340-01-253-8971	280	2
		5340-01-253-8971	281	2
24617	453006	5365-00-277-7341	142	5
		5365-00-277-7341	143	5
		5365-00-277-7341	151	5
34623	45302-11	5340-01-259-3956	246	37
24617	453039	5305-01-459-9564	190	6
31272	45307-10	5340-01-204-2543	272	36
7X677	453349	5305-01-215-3990	83	13
7X677	453571	3110-01-412-0490	115	3
72582	454065	5305-01-143-2328	327	38
		5305-01-143-2328	477	8
		5305-01-143-2328	480	2
21450	454097	4730-00-911-5707	6	1
		4730-00-911-5707	177	3
31272	45410-10	5340-01-254-7191	253	37
		5340-01-254-7191	429	29
		5340-01-254-7191	430	19
31272	45410-11	5340-01-254-7190	251	14
		5340-01-254-7190	430	44
31272	45410-12	5340-01-259-0328	252	21
		5340-01-259-0328	252	35
31272	45410-14	5340-01-259-0329	253	9
		5340-01-259-0329	253	17
		5340-01-259-0329	255	16
31272	45410-15	5340-01-361-7879	448	9
		5340-01-361-7879	449	9
31272	45410-16	5340-01-258-6158	252	40
		5340-01-258-6158	253	4
		5340-01-258-6158	255	7
		5340-01-258-6158	255	10
		5340-01-258-6158	260	23
0VU83	45410-18	5340-01-259-0330	254	9
31272	45410-19	5340-01-275-8567	253	29
		5340-01-275-8567	279	31
31272	45410-20	5340-01-264-5833	234	13
		5340-01-264-5833	252	16
		5340-01-264-5833	253	38
31272	45410-21	5340-01-275-8568	256	1
		5340-01-275-8568	257	4
31272	45410-22	5340-01-272-7815	260	9
24617	454253	5340-01-038-1493	74	16

CROSS REFERENCE INDEXES

PART NUMBER INDEX

CAGE	PART NUMBER	STOCK NUMBER	FIGURE NO	ITEM NO
24617	454542	5305-00-499-7694	51	9
31272	45460-10	5340-01-253-8933	277	14
24617	454748	5310-01-038-9579	375	11
		5310-01-038-9579	375	14
72582	454749	5310-00-164-1790	377	7
31272	45481-01	2590-01-260-0214	279	6
31272	45481-11	2540-01-249-1584	279	1
24617	454838	5306-01-360-1124	446	11
29510	454869	5306-01-244-7882	440	1
7X677	454977	5306-01-192-2207	169	26
24617	455000	5306-01-360-1125	441	13
		5306-01-360-1125	442	10
		5306-01-360-1125	453	19
24617	455002	5306-01-360-1126	442	14
24617	455004	5306-01-360-1127	442	17
24617	455006	5306-01-360-1128	188	37
		5306-01-360-1128	442	1
		5306-01-360-1128	453	12
31272	45502-10	5340-01-260-9026	429	24
31272	45503-10	5340-01-257-0908	429	20
31272	45602-10	2590-01-262-4981	279	7
31272	45602-11	2590-01-262-4980	279	4
31272	45606-10	5340-01-261-1564	251	41
31272	45606-11	5340-01-258-6157	246	12
		5340-01-258-6157	251	18
		5340-01-258-6157	251	32
		5340-01-258-6157	253	23
		5340-01-258-6157	255	32
31272	45606-12	5340-01-256-4655	254	15
31272	45607-10	5340-01-258-8609	252	31
31272	45608-10	2590-01-261-0523	279	22
31272	45610-10	5307-01-286-6007	279	24
31272	45611-10	5310-01-298-4686	279	5
31273	45613-10	5365-01-267-6769	279	13
31272	45615-10	5340-01-260-0218	279	21
31272	45616-11	2590-01-260-0217	279	20
31272	45617-13	3040-01-264-9554	279	8
31272	45618-10	5340-01-271-4281	279	25
31272	45619-11	2590-01-260-0216	279	15
31272	45621-10	5306-01-269-6254	279	9
31272	45623-10	1640-01-271-2598	279	16
7X677	456369	5315-01-196-0277	277	25
31272	45685-10	5340-01-299-2963	252	28
24617	456931	5305-01-500-8280	88	25
24617	456958	5306-01-360-1130	440	16
31272	45721-10	5342-01-260-0215	279	10
31272	45938-10	5340-01-397-1388	262	1
63829	4605-0470	5306-01-296-8600	491	22
13445	46211-03	5940-01-180-3655	69	5

CROSS REFERENCE INDEXES

PART NUMBER INDEX

CAGE	PART NUMBER	STOCK NUMBER	FIGURE NO	ITEM NO
		5940-01-180-3655	481	1
81263	46827	5305-01-197-7547	68	12
51377	4735-38449-02	4140-01-211-8403	32	1
51377	4735-42599-103	2930-01-420-8622	32	4
59150	4755-725	2940-01-176-1427	489	1
78385	476624	4730-00-701-7737	345	35
		4730-00-701-7737	348	33
7X677	477249	5330-01-154-7159	4	10
76599	4816SS-305	4730-01-088-7798	7	6
		4730-01-088-7798	333	3
8K755	48417	4820-01-495-7582	492	12
8K755	48418	4820-01-495-7601	492	10
78385	484487	4730-00-567-1630	393	13
78385	487283	5310-00-333-7341	345	24
		5310-00-333-7341	348	3
57733	487357	5305-00-576-2335	345	18
		5305-00-576-2335	348	12
78385	487370	5310-00-789-0398	349	15
12204	4883434AA		488	21
78385	488558	5305-00-135-3032	348	7
57733	488755	5320-00-801-1548	348	11
78385	488993	5325-00-543-2902	345	38
		5325-00-543-2902	348	37
78385	489142	5305-00-018-8370	345	37
		5305-00-018-8370	348	27
60602	49005-1224	5340-01-290-8360	21	9
24617	4919976	5310-01-317-4022	391	6
45152	4965	9320-01-155-2369	BULK	58
80753	49RED	9905-00-977-2727	330	4
79470	49X4X4	4730-00-366-3011	178	19
79470	49X6X2	4730-00-254-6227	334	7
76301	4M116-04004	5310-01-204-3344	213	25
		5310-01-204-3344	214	20
98465	4M25-4	5310-00-817-4623	261	14
81343	5 010112B(N5)	4730-00-260-8285	366	15
		4730-00-260-8285	384	5
81337	5-11-966-41	5310-00-087-7493	205	36
		5310-00-087-7493	206	21
81343	5-2 010102B	4730-00-266-0535	334	19
81343	5-2 010203CA(ZIN C)	4730-01-204-5457	368	29
81343	5-2 430160C	4730-01-357-5651	388	2
81343	5-2 430260	4730-01-348-6231	388	6
95019	5-213X	2520-01-189-2135	KITS	43
81343	5-4 010203CA(ZIN C)	4730-01-203-1025	385	8
13499	500-1114-003	5310-01-042-8391	40	50
		5310-01-042-8391	43B	45
79136	5008-125MD	5325-00-514-1299	143	21

CROSS REFERENCE INDEXES

PART NUMBER INDEX

CAGE	PART NUMBER	STOCK NUMBER	FIGURE NO	ITEM NO
		5325-00-514-1299	151	21
70412	51-11	2540-01-199-7778	327	5
60602	51078-1	5340-01-456-1500	98	9
24234	513310	5340-01-270-2681	55	9
24234	513394	5340-01-271-6466	494	15
24234	513395	5340-01-271-6465	494	14
24234	513396	5340-01-271-6455	494	20
24234	513409		55	5
24234	513431	5340-01-281-7798	498	12
24234	513438	5340-01-271-6467	496	28
24234	513444	5340-01-288-6551	55	15
24234	513447	2940-01-285-2942	343	20
24234	513448		54	2
24234	513450		498	5
24234	513462	2990-01-265-3298	347	1
24234	514277	5340-01-289-3228	498	16
71286	51L3-1-1-AA	5342-01-036-0649	237	3
71286	51L3-1X1AB	5340-01-209-6874	315	4
86403	52068157	3040-01-244-3646	488	17
96906	521301A203R 5.50		379	41
38506	52252	2590-01-316-2581	319	4
19207	5226154	5325-00-174-9829	136	10
		5325-00-174-9829	136	23
		5325-00-174-9829	137	5
62161	528236-05		505	7
60602	52826-1	3040-01-410-9965	101	8
60602	52827-1	3040-01-410-8054	101	5
19207	5294507	5310-00-350-2655	62	6
35510	5295	5310-01-271-1841	39	61
79136	5304-25-H	5325-01-047-3201	323	11
		5325-01-047-3201	326	10
19207	5310615	5310-00-463-0268	62	25
36251	5311	4730-00-585-2653	169	25
06046	535K1-49383	6680-01-474-0384	482	3
19207	5381088	5930-00-130-5349	46	17
19207	5381233	5310-00-832-6852	46	14
39428	5416K25	4730-01-257-4905	12	30
7Z043	5501	5975-01-280-8922	57	10
34623	5550554	5310-01-144-2779	172	18
34623	5568211	5307-01-196-4937	142	32
		5307-01-196-4937	143	24
		5307-01-196-4937	150	32
		5307-01-196-4937	151	24
34623	5568223	5310-01-174-8632	142	8
		5310-01-174-8632	150	8
34623	5568226	3110-01-027-4475	142	9
		3110-01-027-4475	143	9
		3110-01-027-4475	150	9
		3110-01-027-4475	151	9

CROSS REFERENCE INDEXES

PART NUMBER INDEX

CAGE	PART NUMBER	STOCK NUMBER	FIGURE NO	ITEM NO
34623	5568227	3110-00-100-5920	142	22
		3110-00-100-5920	143	29
		3110-00-100-5920	151	29
34623	5568228	3110-00-100-5937	142	3
		3110-00-100-5937	143	3
		3110-00-100-5937	150	3
		3110-00-100-5937	151	3
34623	5568310	5342-01-189-9982	2	7
34623	5568666	6625-01-180-6542	47	10
34623	5568667	6680-01-298-0498	47	12
34623	5569268	5365-01-186-1294	196	3
		5365-01-186-1294	196	8
34623	5569270	5342-01-189-5452	196	4
		5342-01-189-5452	196	14
34623	5569460	5340-01-189-6748	21	14
34623	5572142	5945-01-175-7318	118	4
34623	5573534		17	14
34623	5573684	5310-01-174-8607	142	21
		5310-01-174-8607	143	28
		5310-01-174-8607	150	21
		5310-01-174-8607	151	28
34623	5573687	5310-01-176-0839	142	25
		5310-01-176-0839	143	33
		5310-01-176-0839	150	25
		5310-01-176-0839	151	33
34623	5573688	5310-01-231-0596	142	6
		5310-01-231-0596	143	6
		5310-01-231-0596	150	6
		5310-01-231-0596	151	6
34623	5573690	5365-01-177-5720	142	26
		5365-01-177-5720	143	34
		5365-01-177-5720	150	26
		5365-01-177-5720	151	34
34623	5573692	5330-01-176-0825	142	12
		5330-01-176-0825	143	12
		5330-01-176-0825	150	12
		5330-01-176-0825	151	12
34623	5573989	5365-01-174-8186	142	4
		5365-01-174-8186	143	4
		5365-01-174-8186	150	4
		5365-01-174-8186	151	4
34623	5574002	5340-01-174-8493	142	13
		5340-01-174-8493	143	13
		5340-01-174-8493	150	13
		5340-01-174-8493	151	13
34623	5574377		269	1
34623	5574856	5330-01-194-0472	8	9
34623	5574872	4710-01-188-6050	15	8
		4710-01-188-6050	16	7

CROSS REFERENCE INDEXES

PART NUMBER INDEX

CAGE	PART NUMBER	STOCK NUMBER	FIGURE NO	ITEM NO
34623	5574879	9515-01-185-3119	267	20
34623	5574921	3020-01-174-5985	142	10
		3020-01-174-5985	150	10
34623	5574924	5340-01-174-2271	142	24
		5340-01-174-2271	143	32
		5340-01-174-2271	150	24
		5340-01-174-2271	151	32
34623	5574995	6680-01-185-1264	67	4
34623	5575418	5340-01-253-3757	199	40
34623	5575466	5310-01-197-1161	209	1
34623	5575702	5340-01-186-1280	266	6
		5340-01-186-1280	284	4
34623	5575703	5340-01-186-1281	266	6
		5340-01-186-1281	284	4
34623	5575752	5340-01-185-8724	266	5
34623	5575936	5320-01-259-6155	224	1
		5320-01-259-6155	237	16
		5320-01-259-6155	263	5
34623	5575940	5320-01-271-1834	211	6
		5320-01-271-1834	212	3
		5320-01-271-1834	296	18
		5320-01-271-1834	346	8
34623	5575967		328	10
34623	5577458	5310-01-220-3099	286	11
34623	5577552		17	8
34623	5577592	5365-01-219-3528	191	3
96139	5577626	5995-01-184-2228	79	1
34623	5577659	2530-01-184-9821	156	19
34623	5577765	5995-01-201-4128	410	3
		5995-01-201-4128	412	3
34623	5577813	3040-01-185-4388	133	11
34623	5577933	5330-01-184-6500	6	3
34623	5578150	5306-01-175-7577	167	3
34623	5578197		240	15
34623	5578215		79	2
34623	5578306-B	5935-01-209-5594	79	3
34623	5578331	9515-01-189-9732	267	8
34623	5578395	2540-01-193-2711	403	22
34623	5578396	2540-01-192-9711	403	5
34623	5578414	5340-01-186-7229	205	28
34623	5578418	5306-01-186-7129	205	25
34623	5578466	2540-01-192-9712	403	1
		2540-01-192-9712	403	6
34623	5578522	5340-01-186-9496	202	38
34623	5578547	2510-01-185-3107	205	37
34623	5578604	4710-01-188-0028	29	10
		4710-01-188-0028	364	8
34623	5578635	3110-01-189-9980	21	22
34623	5578660-B	5330-01-185-0587	21	24

CROSS REFERENCE INDEXES

PART NUMBER INDEX

CAGE	PART NUMBER	STOCK NUMBER	FIGURE NO	ITEM NO
34623	5578667	5360-01-186-4845	165	12
		5360-01-186-4845	166	3
34623	5578673	5355-01-190-7635	99	2
34623	5578675	5360-01-186-4844	99	26
34623	5578694	4710-01-203-0615	334	13
		4710-01-203-0615	386	4
34623	5578742	5360-01-186-3737	21	25
34623	5578749	2510-01-196-5311	203	4
34623	5578764	5315-01-185-7421	21	27
34623	5578802	2530-00-340-1405	157	9
		2530-00-340-1405	158	5
34623	5578809	2530-01-185-3879	158	12
34623	5578822	2530-01-176-4649	152	6
34623	5578823	2530-01-175-7210	152	6
34623	5578874		69	24
34623	5578875		69	10
34623	5578876		69	19
34623	5578877		72	15
34623	5578878		72	3
34623	5578887		246	21
34623	5578910		13	11
			14	17
34623	5578911		13	15
34623	5578916	4710-01-185-9666	159	1
34623	5578918	4710-01-185-9665	161	6
34623	5578943	4720-01-194-5334	398	32
34623	5578947	4730-00-908-6294	27	1
		4730-00-908-6294	337	26
		4730-00-908-6294	343	3
		4730-00-908-6294	387	5
34623	5578999		27	15
34623	5579007		13	7
34623	5579008		13	19
34623	5579061	2530-01-174-4174	142	31
		2530-01-174-4174	150	31
34623	5579257	5340-01-203-8675	272	20
34623	5579292	9515-01-189-9745	267	19
34623	5579297	5365-01-194-0761	267	16
34623	5579324	5330-01-184-6492	103	10
		5330-01-184-6492	400	6
34623	5579386		245	39
34623	5579424	3040-01-174-9130	148	1
34623	5579426		148	4
34623	5579428		148	29
34623	5579435		148	28
34623	5579436		148	22
34623	5579438	5305-01-174-8625	148	24
34623	5579442	5310-01-175-0617	148	10
34623	5579445	5365-01-175-3593	KITS	44

CROSS REFERENCE INDEXES

PART NUMBER INDEX

CAGE	PART NUMBER	STOCK NUMBER	FIGURE NO	ITEM NO
34623	5579445-54	5365-01-381-4487	148	17
34623	5579445-55	5365-01-382-3676	148	17
34623	5579445-56	5365-01-382-0973	148	17
34623	5579445-57	5365-01-382-3710	148	17
34623	5579445-58	5365-01-382-1170	148	17
34623	5579445-59	5365-01-382-1235	148	17
34623	5579445-60	5365-01-382-1181	148	17
34623	5579445-61	5365-01-382-1135	148	17
34623	5579445-62	5365-01-382-1177	148	17
34623	5579445-63	5365-01-382-1162	148	17
34623	5579445-64	5365-01-382-3693	148	17
34623	5579445-65	5365-01-382-3726	148	17
34623	5579445-66	5365-01-382-1273	148	17
34623	5579445-67	5365-01-382-1166	148	17
34623	5579445-68	5365-01-382-1157	148	17
34623	5579445-69	5365-01-382-1240	148	17
34623	5579445-70	5365-01-382-3718	148	17
34623	5579445-71	5365-01-382-1132	148	17
34623	5579445-72	5365-01-382-1171	148	17
34623	5579445-73	5365-01-382-3715	148	17
34623	5579445-74	5365-01-388-4449	148	17
34623	5579445-75	5365-01-382-3694	148	17
34623	5579445-76	5365-01-382-1159	148	17
34623	5579445-77	5365-01-382-3447	148	17
34623	5579445-78	5365-01-382-3700	148	17
34623	5579445-79	5365-01-382-1058	148	17
34623	5579450	5365-01-180-2585	148	5
34623	5579453	5365-01-174-8174	KITS	45
34623	5579453-44	5365-01-381-5166	148	20
34623	5579453-45	5365-01-381-9582	148	20
34623	5579453-46	5365-01-381-5174	148	20
34623	5579453-47	5365-01-381-6332	148	20
34623	5579453-48	5365-01-381-6120	148	20
34623	5579453-49	5365-01-380-5345	148	20
34623	5579453-50	5365-01-381-6151	148	20
34623	5579453-51	5365-01-381-6276	148	20
34623	5579453-52	5365-01-381-6223	148	20
34623	5579453-53	5365-01-381-6080	148	20
34623	5579453-54	5365-01-381-6250	148	20
34623	5579453-55	5365-01-381-6145	148	20
34623	5579453-56	5365-01-381-6174	148	20
34623	5579453-57	5365-01-381-6210	148	20
34623	5579453-58	5365-01-381-6292	148	20
34623	5579453-59	5365-01-381-6110	148	20
34623	5579453-60	5365-01-381-6158	148	20
34623	5579453-61	5365-01-381-6313	148	20
34623	5579453-62	5365-01-381-6226	148	20
34623	5579453-63	5365-01-381-6076	148	20
34623	5579453-64	5365-01-381-6303	148	20

CROSS REFERENCE INDEXES

PART NUMBER INDEX

CAGE	PART NUMBER	STOCK NUMBER	FIGURE NO	ITEM NO
34623	5579453-65	5365-01-381-6164	148	20
34623	5579453-66	5365-01-381-6197	148	20
34623	5579453-67	5365-01-381-6229	148	20
34623	5579453-68	5365-01-381-6086	148	20
34623	5579453-69	5365-01-381-6122	148	20
34623	5579453-70	5365-01-381-6154	148	20
34623	5579453-71	5365-01-381-6188	148	20
34623	5579453-72	5365-01-381-6317	148	20
34623	5579453-73	5365-01-381-6240	148	20
34623	5579453-74	5365-01-381-6112	148	20
34623	5579453-75	5365-01-381-6258	148	20
34623	5579453-76	5365-01-381-6165	148	20
34623	5579453-77	5365-01-381-6211	148	20
34623	5579453-78	5365-01-381-9588	148	20
34623	5579453-79	5365-01-438-1556	148	20
34623	5579453-80	5365-01-381-6113	148	20
34623	5579453-81	5365-01-381-6261	148	20
34623	5579453-82	5365-01-381-6175	148	20
34623	5579453-83	5365-01-381-6278	148	20
34623	5579474	2530-01-175-7213	144	20
		2530-01-175-7213	152	20
34623	5579475	2530-01-175-7212	144	20
		2530-01-175-7212	152	20
34623	5579485	2510-01-188-3228	203	18
34623	5579501	3020-01-191-8784	148	27
34623	5579538	2510-01-189-0890	184	6
34623	5579620	2510-01-189-0891	182	7
34623	5579621	2510-01-187-7031	182	7
34623	5579658	5325-01-214-5007	327	19
34623	5579716	2510-01-189-9720	204	11
34623	5579717	2540-01-189-9729	204	11
34623	5579811	5365-01-211-6083	246	25
34623	5579818	5340-01-195-5397	243	19
34623	5579894	4710-01-192-9546	268	36
34623	5579895	4710-01-192-7965	268	31
34623	5579941	5365-01-211-5063	62	12
34623	5581162	5330-01-252-5377	197	32
34623	5581163	5330-01-252-5378	199	60
34623	5581211		46	5
34623	5581213		199	23
34623	5581260	2590-01-188-3225	226	34
34623	5581313		325	3
34623	5581315	5325-01-199-2254	322	6
		5325-01-199-2254	324	6
34623	5581319	2540-01-203-7721	320	21
		2540-01-203-7721	324	26
34623	5581320	2540-01-200-1994	320	9
		2540-01-200-1994	320	21
		2540-01-200-1994	324	12

CROSS REFERENCE INDEXES

PART NUMBER INDEX

CAGE	PART NUMBER	STOCK NUMBER	FIGURE NO	ITEM NO
		2540-01-200-1994	324	26
		2540-01-200-1994	375	17
34623	5581321	5310-01-205-9056	316	13
		5310-01-205-9056	320	11
		5310-01-205-9056	320	23
		5310-01-205-9056	324	18
		5310-01-205-9056	324	30
		5310-01-205-9056	378	21
34623	5581331	2540-01-199-6760	389	6
34623	5581347	2540-01-197-5476	325	15
34623	5581348	2510-01-189-9724	316	7
		2510-01-189-9724	320	19
		2510-01-189-9724	324	24
34623	5581349	2510-01-189-9725	320	19
		2510-01-189-9725	324	24
34623	5581362	5340-01-207-0717	198	24
34623	5581364	5342-01-204-9610	376	16
34623	5581366		225	7
			325	4
34623	5581367	2540-01-196-5313	225	8
34623	5581371	2590-01-198-2895	317	6
		2590-01-198-2895	373	5
34623	5581372	2590-01-197-4898	317	6
		2590-01-197-4898	373	5
34623	5581387	5340-01-199-9679	323	10
34623	5581392-B	5315-01-197-1494	323	9
		5315-01-197-1494	326	8
34623	5581396		325	6
34623	5581439	5305-01-203-8346	317	4
		5305-01-203-8346	321	5
		5305-01-203-8346	325	8
34623	5581461	5310-01-018-5332	324	16
34623	5581464	5340-01-202-7445	323	3
		5340-01-202-7445	326	3
13445	5582	5930-00-736-3539	39	29
		5930-00-736-3539	59	19
34623	5582303	2520-01-210-2624	148	21
34623	5582366	5310-01-189-8476	159	9
		5310-01-189-8476	160	5
		5310-01-189-8476	161	10
		5310-01-189-8476	162	16
		5310-01-189-8476	487A	11
		5310-01-189-8476	487D	7
34623	5582405	5340-01-191-3526	15	33
34623	5582412	5340-01-191-0746	15	26
		5340-01-191-0746	16	37
34623	5582423	5340-01-198-2248	247	17
		5340-01-198-2248	249	39
34623	5582436	2510-01-310-2324	274	6

CROSS REFERENCE INDEXES

PART NUMBER INDEX

CAGE	PART NUMBER	STOCK NUMBER	FIGURE NO	ITEM NO
34623	5582439	5340-01-199-3499	272	21
34623	5582479		124	1
34623	5582481	5975-01-208-9618	41	8
		5975-01-208-9618	44	22
		5975-01-208-9618	44	27
		5975-01-208-9618	474	15
		5975-01-208-9618	480	18
		5975-01-208-9618	480	30
34623	5582605	5340-01-191-3359	206	12
34623	5582606		15	14
34623	5582642		123	6
34623	5582643		141	2
34623	5582644		399	10
			400	8
34623	5582649		141	7
34623	5582653	4730-01-070-7680	149	6
34623	5582677	5310-01-210-7938	202	40
34623	5582763	5340-01-190-0333	179	18
		5340-01-190-0333	180	28
34623	5582815	4710-01-189-1080	124	4
34623	5582817	4710-01-188-3516	124	6
		4710-01-188-3516	125	7
34623	5582819	4710-01-188-3515	124	7
		4710-01-188-3515	125	6
34623	5582851	5365-01-193-2951	169	18
34623	5582897	2540-01-192-9714	403	21
34623	5582902		249	10
34623	5582936	5330-01-203-9187	368	1
34623	5582968	3010-01-292-6428	148	9
34623	5583050	5305-01-221-7734	286	2
34623	5583062-B	5305-01-224-1449	286	5
34623	5583066	5365-01-218-9848	285	12
34623	5583120		245	18
34623	5583141	5306-01-195-0277	269	17
34623	5583156	5365-01-194-5093	270	18
34623	5583215	5365-01-214-4987	196	11
34623	5583219	5365-01-209-7831	181	5
		5365-01-209-7831	184	9
34623	5583231	5340-01-203-9391	278	15
34623	5583235	5340-01-213-4267	240	17
34623	5583291	2540-01-210-2749	268	13
34623	5583352	4710-01-203-1304	368	28
34623	5583395	5980-01-186-8319	46	2
34623	5583555	5340-01-259-7523	247	16
34623	5583556-B	5340-01-283-2458	247	9
34623	5583558	5365-01-198-3399	248	12
34623	5583568	5340-01-197-8674	248	16
		5340-01-197-8674	429	14
34623	5583571	5365-01-198-3505	248	22

CROSS REFERENCE INDEXES

PART NUMBER INDEX

CAGE	PART NUMBER	STOCK NUMBER	FIGURE NO	ITEM NO
34623	5583572	5365-01-198-3401	248	18
34623	5583576	5342-01-193-7088	488	14
34623	5583606	5306-01-194-6433	97	5
34623	5583650	4710-01-188-8780	124	3
34623	5583676	2590-01-188-5081	245	1
34623	5583717	5340-01-209-7799	85	27
		5340-01-209-7799	88	8
34623	5583758		148	2
34623	5583993	5340-01-197-3478	245	19
34623	5584019	4710-01-186-1009	13	1
34623	5584021	4710-01-186-1010	13	5
34623	5584024	4710-01-187-6759	13	9
		4710-01-187-6759	13	16
		4710-01-187-6759	14	15
		4710-01-187-6759	14	22
34623	5584032	5340-01-196-0572	277	38
34623	5584077	5340-01-212-7711	182	10
34623	5584104	5340-01-197-6715	245	2
34623	5584105	5340-01-197-6716	245	6
34623	5584107	5315-01-198-3346	245	12
34623	5584110	2520-01-210-3506	99	19
34623	5584135	5340-01-203-5629	245	3
34623	5584136	5340-01-203-5630	245	7
34623	5584137	5365-01-181-5085	142	23
		5365-01-181-5085	150	23
34623	5584138	5340-01-197-2716	270	29
34623	5584142	4710-01-186-1016	159	10
34623	5584146	4710-01-185-9667	160	8
34623	5584151	2510-01-192-5950	270	15
34623	5584152	2540-01-192-8283	270	15
34623	5584173		141	8
34623	5584259	5340-01-198-7580	280	29
34623	5584260	5340-01-197-6714	281	29
34623	5584261	2540-01-198-7581	281	29
34623	5584264	2510-01-211-3229	280	33
34623	5584278	5315-01-204-2328	280	39
		5315-01-204-2328	281	39
34623	5584294	5340-01-211-1645	280	52
34623	5584299	5365-01-197-9383	280	21
		5365-01-197-9383	281	21
34623	5584302	5340-01-198-2241	280	8
		5340-01-198-2241	281	8
34623	5584325	5340-01-204-2458	280	6
		5340-01-204-2458	281	6
34623	5584341	2910-01-186-6038	15	16
34623	5584358		269	1
34623	5584372		141	3
34623	5584373		399	5
34623	5584383		141	1

CROSS REFERENCE INDEXES

PART NUMBER INDEX

CAGE	PART NUMBER	STOCK NUMBER	FIGURE NO	ITEM NO
34623	5584384	5330-01-209-7723	169	24
34623	5584391	5325-01-210-1633	84	6
34623	5584421	5340-01-203-0324	280	18
		5340-01-203-0324	281	18
34623	5584436	5365-01-201-4749	280	5
		5365-01-201-4749	281	5
34623	5584462	5310-01-213-4185	142	20
		5310-01-213-4185	143	27
		5310-01-213-4185	150	20
		5310-01-213-4185	151	27
34623	5584559	4710-01-278-1053	12	10
34623	5584575-B	5365-01-213-5739	398	20
34623	5584588	4720-01-203-7789	12	8
34623	5584707		280	31
			281	31
34623	5584710	5310-01-203-3217	280	20
		5310-01-203-3217	281	20
		5310-01-203-3217	429	3
		5310-01-203-3217	430	3
		5310-01-203-3217	430	22
		5310-01-203-3217	430	39
34623	5584713	5310-01-198-3428	280	27
		5310-01-198-3428	281	27
34623	5584765	5340-01-211-5083	274	31
34623	5584766	5340-01-211-6288	272	13
34623	5584769	2530-01-175-7211	144	6
34623	5584813		207	5
34623	5584836		207	4
34623	5584854	5360-01-195-6200	243	25
34623	5584867	5340-01-197-8675	280	6
		5340-01-197-8675	281	6
34623	5584891	5340-01-211-0838	277	29
		5340-01-211-0838	278	8
		5340-01-211-0838	440	4
34623	5584900	4710-01-186-9620	161	5
		4710-01-186-9620	162	5
34623	5584963	5340-01-211-3132	202	14
34623	5584977	5340-01-196-2573	403	19
34623	5584999	5365-01-193-4479	403	20
34623	5585094	5340-01-208-8688	12	32
34623	5585103	5310-01-188-0745	169	3
34623	5585111	2510-01-303-5769	47	8
34623	5585132-C	5340-01-252-8537	208	24
34623	5585133	5340-01-255-4655	208	26
34623	5585143	5365-01-252-8026	208	30
34623	5585152	5310-01-185-8692	328	4
34623	5585154	5340-01-203-8608	225	4
		5340-01-203-8608	226	38
34623	5585178	5365-01-213-4239	225	24

CROSS REFERENCE INDEXES

PART NUMBER INDEX

CAGE	PART NUMBER	STOCK NUMBER	FIGURE NO	ITEM NO
		5365-01-213-4239	226	11
34623	5585245		327	27
34623	5585259	5306-01-323-5535	281	50
34623	5585259-B	5306-01-323-5535	198	22
34623	5585445	2590-01-270-9446	295	5
34623	5585446	2510-01-270-9447	295	4
34623	5588022	2815-01-168-7912	4	22
34623	5588032	5340-01-209-7807	153	19
34623	5588062	5306-01-286-7182	203	25
		5306-01-286-7182	204	10
34623	5588063		280	30
			281	30
34623	5588064	5305-01-204-6502	84	1
		5305-01-204-6502	85	25
34623	5588167	5340-01-185-8821	202	27
34623	5588172	5340-01-186-7658	202	8
34623	5588179	5340-01-189-9979	202	15
34623	5588193	5340-01-291-5711	417	10
34623	5588629	5340-01-212-2407	83	14
34623	5588647		403	16
34623	5588648		403	16
34623	5588656	2540-01-334-4333	403	18
34623	5588675	5340-01-212-4887	23	9
		5340-01-212-4887	24	6
34623	5588694	4710-01-203-0607	334	14
		4710-01-203-0607	366	19
		4710-01-203-0607	386	5
34623	5588696	4710-01-203-0608	334	18
		4710-01-203-0608	384	1
34623	5588698		334	17
34623	5588701	4720-01-210-0484	7	9
34623	5588702	2510-01-262-6010	198	11
34623	5588705	5325-01-214-7817	80	11
34623	5588719	5340-01-209-7386	411	17
34623	5588767		19	12
34623	5588773		388	1
34623	5588778	2540-01-309-4459	23	11
		2540-01-309-4459	24	12
34623	5588785	5340-01-213-4667	75	48
34623	5588872		288	2
34623	5588877	5340-01-281-3429	288	18
34623	5588878	2540-01-275-6203	288	15
34623	5588904	5306-01-265-8767	262	5
34623	5588927	5305-01-272-9959	238	7
34623	5588931	2510-01-270-7925	296	10
34623	5588959	5340-01-266-3845	293	14
34623	5589012-B	5995-01-269-9525	339	11
34623	5589067	5306-01-204-2139	280	28
		5306-01-204-2139	281	28

CROSS REFERENCE INDEXES

PART NUMBER INDEX

CAGE	PART NUMBER	STOCK NUMBER	FIGURE NO	ITEM NO
34623	5589086	9330-01-197-5458	374	13
34623	5589167	5995-01-201-7495	412	1
34623	5589275		374	1
34623	5589357	5340-01-272-4942	217	4
34623	5589425	5340-01-272-2732	224	17
34623	5589505	5360-01-275-3512	218	2
34623	5589581	5340-01-274-9899	238	16
34623	5589748-C	5340-01-272-4935	289	24
34623	5589763	2510-01-270-9707	300	1
34623	5589776	2540-01-280-4159	293	18
34623	5589785		288	2
34623	5589853-A	5340-01-309-7900	296	16
34623	5589864	5340-01-272-5594	287	29
34623	5589868	5340-01-273-4667	287	25
34623	5589918	5340-01-310-5321	224	4
34623	5589947	5330-01-272-7473	295	3
34623	5589961	5340-01-272-8410	214	31
34623	5589970	5330-01-282-0913	341	5
34623	5590023		177	1
34623	5590024	4720-01-297-0255	177	7
34623	5590025		178	7
34623	5590029	5325-01-255-5062	414	21
34623	5590149	5320-01-218-5802	286	30
34623	5590150	5320-01-219-7261	286	6
		5320-01-219-7261	286	15
34623	5590155	5325-01-255-5063	416	24
		5325-01-255-5063	428	23
34623	5590244	5999-01-197-5465	410	KIT
34623	5590284	4710-01-210-3503	333	7
34623	5590387	5340-01-211-4025	23	12
34623	5590530	2590-01-187-7039	156	20
34623	5590540	3040-01-465-3178	156	11
34623	5590544		367	3
34623	5590550	5340-01-266-2995	202	7
34623	5590551	2520-01-188-5131	148	11
34623	5590556	5310-01-208-5252	374	23
34623	5590602	5360-01-214-3695	153	14
34623	5590630	2540-01-197-5463	374	20
34623	5590643	4710-01-185-8329	161	8
34623	5590644	4710-01-185-8328	161	13
34623	5590669	2540-01-314-1121	284	16
		2540-01-314-1121	439	9
34623	5591114	5340-01-260-4881	268	24
34623	5591115	4710-01-251-3076	268	27
34623	5591157		149	4
34623	5591158		149	1
34623	5591161		149	5
34623	5591168		123	5
34623	5591169	5340-01-197-2438	62	24

CROSS REFERENCE INDEXES

PART NUMBER INDEX

CAGE	PART NUMBER	STOCK NUMBER	FIGURE NO	ITEM NO
34623	5591200	5940-01-204-8830	412	8
34623	5591210		398	30
34623	5591252	5340-01-212-3709	28	6
34623	5591253		123	1
			399	7
34623	5591279	2530-01-203-5663	142	33
		2530-01-203-5663	150	33
34623	5591280	2530-01-203-5662	142	18
		2530-01-203-5662	150	18
34623	5591286	5307-01-196-4717	4	26
34623	5591313	5330-01-255-0207	202	5
34623	5591315	5330-01-255-0208	202	11
34623	5591333		403	7
34623	5591334		403	7
34623	5591345	5331-01-176-0923	167	4
34623	5591482		141	6
34623	5591483		141	5
			149	3
34623	5591507	5310-01-212-2303	277	27
34623	5591514	5310-01-217-0715	279	34
34623	5591553	2590-01-261-5485	230	22
		2590-01-261-5485	231	27
34623	5591575	5365-01-212-0144	272	32
34623	5591577-B	5365-01-252-9214	205	11
34623	5591614	4710-01-265-3231	334	8
34623	5591648	5340-01-213-5735	202	2
		5340-01-213-5735	218	7
		5340-01-213-5735	253	35
34623	5591707		398	29
34623	5591712	2590-01-262-7706	227	29
34623	5591713	2590-01-263-3254	227	29
34623	5591781	5305-01-185-7122	179	7
		5305-01-185-7122	180	8
		5305-01-185-7122	184	11
34623	5591935	2540-01-390-5711	370	3
34623	5591937		124	5
34623	5591938		124	8
34623	5591957	5340-01-213-4662	204	13
34623	5592010	5340-01-272-6633	238	12
34623	5592011	5360-01-278-9723	238	20
34623	5592019	2540-01-271-3773	288	28
34623	5592020	5340-01-272-7493	288	31
34623	5592085		217	6
34623	5592234	5340-01-297-1549	296	13
34623	5592725	2510-01-252-8461	284	6
34623	5592726	2510-01-252-7903	284	8
34623	5592727	2510-01-252-7904	284	10
34623	5592737	2510-01-175-7224	181	17
34623	5592814	5305-01-253-2998	241	11

CROSS REFERENCE INDEXES

PART NUMBER INDEX

CAGE	PART NUMBER	STOCK NUMBER	FIGURE NO	ITEM NO
34623	5592817	5305-01-256-6870	429	13
		5305-01-256-6870	430	27
		5305-01-256-6870	430	34
34623	5592819	5305-01-250-6582	57	8
34623	5592823	5305-01-251-0728	249	23
		5305-01-251-0728	253	25
		5305-01-251-0728	256	6
		5305-01-251-0728	257	9
		5305-01-251-0728	259	10
		5305-01-251-0728	262	3
		5305-01-251-0728	263	6
		5305-01-251-0728	264	2
		5305-01-251-0728	265	2
34623	5592838	5305-01-253-2989	240	10
34623	5592840	5305-01-254-2460	92	17
		5305-01-254-2460	199	25
		5305-01-254-2460	497	1
34623	5592846	5305-01-255-1017	249	19
34623	5592861	5305-01-254-2453	269	26
34623	5592862	5305-01-254-2451	249	40
34623	5592878	5305-01-250-6583	46	22
34623	5592879	5306-01-254-2360	279	37
34623	5592884	5305-01-255-1016	247	21
		5305-01-255-1016	247	26
		5305-01-255-1016	248	23
		5305-01-255-1016	249	8
		5305-01-255-1016	249	32
34623	5592899	5305-01-254-2461	398	13
34623	5592900	5305-01-255-4606	222	9
34623	5592916	5310-01-252-0513	241	6
		5310-01-252-0513	249	25
		5310-01-252-0513	272	17
34623	5592926	5310-01-253-8949	248	15
		5310-01-253-8949	280	4
		5310-01-253-8949	280	53
		5310-01-253-8949	281	4
		5310-01-253-8949	281	53
		5310-01-253-8949	286	17
34623	5592927	5310-01-253-8957	226	22
34623	5592952	5305-00-253-5609	133	3
34623	5592954	5305-01-206-8401	75	28
		5305-01-206-8401	84	16
34623	5592958	5310-01-253-1615	410	16
34623	5592970	5305-01-255-2675	246	27
34623	5592994	5305-01-252-9108	199	36
34623	5592995	5310-01-253-8928	331	23
34623	5592998	5310-01-250-6587	59	10
		5310-01-250-6587	99	12
34623	5592999	5310-01-253-0058	199	58

CROSS REFERENCE INDEXES

PART NUMBER INDEX

CAGE	PART NUMBER	STOCK NUMBER	FIGURE NO	ITEM NO
34623	5593006	5305-01-256-0406	215	6
		5305-01-256-0406	430	26
34623	5593011	5305-01-251-9222	104	17
34623	5593024	5306-01-254-2359	177	16
34623	5593027	5310-01-255-9452	413	10
34623	5593030	5305-01-268-5680	333	40
34623	5593033	5310-01-252-2999	59	7
		5310-01-252-2999	75	32
		5310-01-252-2999	84	10
		5310-01-252-2999	153	6
		5310-01-252-2999	330	1
34623	5593035	5310-01-255-2695	58	10
34623	5593038	5310-01-251-0711	49	9
		5310-01-251-0711	333	2
34623	5593047	5310-01-266-6392	488	16
34623	5593048	5310-00-251-4503	63	5
34623	5593050		337	24
34623	5593182	5340-01-259-0330	255	26
34623	5593189	2590-01-249-1579	255	13
34623	5593200	5306-01-387-7457	270	31
34623	5593213	5310-00-080-6004	26	5
34623	5593218	5310-01-253-8438	286	27
0MAY0	5593221	5310-01-258-1536	26	4
		5310-01-258-1536	174	12
		5310-01-258-1536	398	26
34623	5593225	5305-00-550-1537	205	24
34623	5593235	5310-01-257-7719	169	32
		5310-01-257-7719	205	7
		5310-01-257-7719	206	27
34623	5593241	5310-01-253-8952	280	12
		5310-01-253-8952	280	37
		5310-01-253-8952	281	12
		5310-01-253-8952	281	37
34623	5593242	5310-01-253-8953	280	19
		5310-01-253-8953	280	35
		5310-01-253-8953	281	19
		5310-01-253-8953	281	35
		5310-01-253-8953	335	12
		5310-01-253-8953	336	9
34623	5593258	5305-01-253-2993	205	33
		5305-01-253-2993	206	20
34623	5593261	5310-01-253-0060	205	8
		5310-01-253-0060	206	28
34623	5593284	5305-01-255-4611	327	20
34623	5593286	5305-01-254-2452	248	2
		5305-01-254-2452	272	22
34623	5593308	5310-01-254-5352	46	20
		5310-01-254-5352	208	3
34623	5593309	4730-01-255-0925	331	32

CROSS REFERENCE INDEXES

PART NUMBER INDEX

CAGE	PART NUMBER	STOCK NUMBER	FIGURE NO	ITEM NO
34623	5593312	5310-01-147-4052	144	2
		5310-01-147-4052	165	2
		5310-01-147-4052	181	11
		5310-01-147-4052	182	1
		5310-01-147-4052	184	14
		5310-01-147-4052	195	1
		5310-01-147-4052	270	34
34623	5593313	5305-01-254-2459	268	1
		5305-01-254-2459	270	40
34623	5593318	5310-01-278-9555	208	21
		5310-01-278-9555	283	23
34623	5593320	5310-01-253-8948	179	4
		5310-01-253-8948	180	5
		5310-01-253-8948	181	2
		5310-01-253-8948	182	3
		5310-01-253-8948	187	12
		5310-01-253-8948	188	2
		5310-01-253-8948	191	2
		5310-01-253-8948	194	1
		5310-01-253-8948	283	3
		5310-01-253-8948	417	15
34623	5593345	5306-01-263-6142	279	32
34623	5593348	5306-01-251-1616	142	27
34623	5593359	5306-01-255-2662	415	6
34623	5593387	5310-01-272-6546	287	32
34623	5593409	5305-01-272-9042	56	25
		5305-01-272-9042	57	2
		5305-01-272-9042	65	2
		5305-01-272-9042	92	11
		5305-01-272-9042	95	29
		5305-01-272-9042	283	27
		5305-01-272-9042	304	9
		5305-01-272-9042	339	1
34623	5593413	5310-01-270-8189	65	21
		5310-01-270-8189	91	8
		5310-01-270-8189	93	20
		5310-01-270-8189	216	2
34623	5593416	5310-00-889-8782	140	2
		5310-00-889-8782	147	2
34623	5593421	5305-01-270-5435	335	10
		5305-01-270-5435	336	7
3M915	5593430	5305-01-270-5418	211	21
		5305-01-270-5418	212	19
34623	5593432	5305-01-283-7776	293	21
34623	5593479	6150-01-473-8640	56	14
34623	5593495	5340-01-474-8830	463	22
34623	5593535	5325-01-290-1695	91	12
34623	5593597	5310-01-272-5470	238	14
34623	5593599	5935-01-282-7833	52	6

CROSS REFERENCE INDEXES

PART NUMBER INDEX

CAGE	PART NUMBER	STOCK NUMBER	FIGURE NO	ITEM NO
		5935-01-282-7833	57	5
34623	5593615	2510-01-307-0152	331	7
34623	5593624	5340-01-248-7621	243	31
		5340-01-248-7621	244	15
34623	5593625	5340-01-260-9027	207	9
		5340-01-260-9027	318	8
		5340-01-260-9027	325	21
34623	5593634	5305-01-256-0405	244	20
34623	5593641	2590-01-248-2531	251	12
34623	5593642	2590-01-248-4874	251	11
34623	5593661	2520-01-249-1434	97	8
		2520-01-249-1434	101	10
34623	5593675	5340-01-259-0327	251	49
34623	5593691	5310-01-251-0748	58	8
		5310-01-251-0748	99	8
		5310-01-251-0748	208	15
		5310-01-251-0748	252	2
		5310-01-251-0748	334	4
		5310-01-251-0748	338	20
		5310-01-251-0748	339	15
		5310-01-251-0748	417	2
		5310-01-251-0748	418	2
		5310-01-251-0748	419	2
		5310-01-251-0748	420	7
		5310-01-251-0748	421	4
		5310-01-251-0748	422	6
		5310-01-251-0748	423	10
		5310-01-251-0748	425	2
		5310-01-251-0748	426	4
		5310-01-251-0748	427	3
34623	5593694	5365-01-210-4903	44	1
34623	5593807	5340-01-258-1547	279	36
34623	5593817	2520-01-174-5849	148	15
34623	5593847	5360-01-265-9116	156	4
34623	5593910	5330-01-185-8715	205	40
34623	5593912	5330-01-185-8714	206	11
34623	5593926	2530-01-235-8688	167	12
34623	5593927	5342-01-268-0921	275	23
34623	5593930	5330-01-195-9049	270	24
34623	5593947	4710-01-251-3075	227	22
34623	5593978	5360-01-260-0700	153	24
		5360-01-260-0700	154	9
34623	5593982		208	36
34623	5593985		249	16
34623	5593990	5342-01-260-7853	430	29
34623	5593993		142	7
			143	7
			150	7
			151	7

CROSS REFERENCE INDEXES

PART NUMBER INDEX

CAGE	PART NUMBER	STOCK NUMBER	FIGURE NO	ITEM NO
34623	5594002	4710-01-251-6103	227	4
34623	5594076	2590-01-262-7707	227	11
34623	5594077	2590-01-261-6851	227	24
34623	5594083		18	8
34623	5594101-C	5340-01-297-2800	21	5
34623	5594178	5306-01-323-5534	331	4
34623	5594249	5340-01-289-3243	429	2
34623	5594252	9515-01-249-1591	429	7
34623	5594278		429	32
34623	5594317		52	5
			57	4
34623	5594319	9905-01-294-3356	52	8
		9905-01-294-3356	57	7
34623	5594531-B	5365-01-414-2902	143	23
		5365-01-414-2902	151	23
34623	5594572	5340-01-249-1575	179	16
34623	5594676	2590-01-248-9531	286	40
34623	5594703	5340-01-256-4657	246	36
34623	5595214	4730-01-247-6763	150	5
34623	5595216	5340-01-256-9318	324	17
34623	5595217	5340-01-255-9919	316	20
		5340-01-255-9919	320	17
		5340-01-255-9919	320	32
		5340-01-255-9919	324	17
		5340-01-255-9919	324	29
34623	5595227		269	1
34623	5595228		269	1
34623	5595393	2510-01-236-6488	278	4
34623	5595454	5365-01-186-7764	193	1
34623	5595531	5330-01-258-4664	272	6
34623	5595551	2590-01-291-1033	417	13
34623	5595643	5330-01-255-4986	488	20
34623	5595662	5306-01-254-2358	148	3
34623	5595746	6150-01-260-8000	384	10
34623	5595964	5310-01-256-0416	328	16
34623	5595966	6670-01-261-6844	167	12
34623	5595968	6670-01-261-6845	167	12
34623	5595969	6670-01-261-6846	167	12
34623	5595970	6670-01-262-8646	167	12
34623	5595971	6670-01-261-8011	167	12
34623	5595972	6670-01-261-8012	167	12
34623	5595973	6670-01-261-8013	167	12
34623	5595974	6670-01-261-6847	167	12
34623	5595995		429	31
34623	5596009	2590-01-262-9515	253	14
34623	5596025	4210-01-204-0913	241	10
34623	5596028	5340-01-256-4517	251	27
		5340-01-256-4517	252	27
		5340-01-256-4517	253	22

CROSS REFERENCE INDEXES

PART NUMBER INDEX

CAGE	PART NUMBER	STOCK NUMBER	FIGURE NO	ITEM NO
		5340-01-256-4517	255	21
3M915	5596167	5310-01-298-7770	398	21
34623	5596171		225	16
34623	5596172		225	33
			226	18
34623	5596198	5340-01-440-1435	270	37
34623	5596249	5355-01-247-3593	331	28
34623	5596271	5306-01-185-7071	71	3
34623	5596306	5365-01-255-0965	153	26
		5365-01-255-0965	154	8
34623	5596320	7690-01-264-6536	358	4
34623	5596374	5340-01-260-9874	266	3
34623	5596459	5315-01-255-2763	243	34
34623	5596460	5315-01-255-2764	243	26
34623	5596566	5310-01-253-8440	410	34
		5310-01-253-8440	412	25
34623	5596580	5330-01-270-1353	274	7
		5330-01-270-1353	276	26
34623	5596642	5365-01-255-4990	277	5
34623	5596643	5365-01-255-4991	277	5
34623	5596644	5365-01-255-4633	277	5
34623	5596645	5365-01-255-4634	277	5
34623	5596736	5340-01-259-8579	266	17
34623	5596794	5340-01-290-2279	417	6
34623	5596795	5975-01-312-5469	417	1
34623	5596797	5340-01-290-8473	423	6
34623	5596803	5306-01-273-6333	154	2
34623	5596814	5365-01-272-7504	335	11
		5365-01-272-7504	336	8
34623	5596830	2590-01-257-8784	227	53
34623	5596843	5340-01-290-4887	425	4
		5340-01-290-4887	427	5
34623	5596946	5820-01-287-9612	428	KIT
34623	5597035	5365-01-280-5875	337	25
		5365-01-280-5875	338	25
34623	5597048	5310-01-260-5784	208	17
34623	5597050	4730-01-257-3348	148	23
34623	5597086	5340-01-290-8390	417	17
34623	5597090	5340-01-270-8483	213	12
		5340-01-270-8483	214	6
34623	5597096	5340-01-273-2342	213	10
		5340-01-273-2342	214	8
34623	5597128		52	2
34623	5597136-C	6150-01-289-4761	424	1
34623	5597137	5995-01-290-1719	426	1
		5995-01-290-1719	427	1
34623	5597138	5995-01-291-6377	425	1
		5995-01-291-6377	426	2
		5995-01-291-6377	427	2

CROSS REFERENCE INDEXES

PART NUMBER INDEX

CAGE	PART NUMBER	STOCK NUMBER	FIGURE NO	ITEM NO
34623	5597142	5342-01-277-9102	147	3
34623	5597150	5340-01-291-5186	425	7
		5340-01-291-5186	427	8
34623	5597151	5340-01-290-6343	426	3
34623	5597155	5340-01-290-4888	426	7
34623	5597172	5340-01-186-1817	158	6
34623	5597186	5340-01-264-6108	430	14
34623	5597197		59	1
34623	5597208		92	3
			95	14
34623	5597243	2590-01-276-7633	65	1
34623	5597248	5935-01-269-8992	52	19
		5935-01-269-8992	56	6
34623	5597249	5945-01-266-4593	52	18
		5945-01-266-4593	56	9
34623	5597252	5306-01-264-3531	174	1
34623	5597262		149	2
34623	5597267	5340-01-273-4668	57	9
34623	5597277	5325-01-477-5348	95	6
34623	5597286	5340-01-244-5765	15	15
		5340-01-244-5765	180	2
34623	5597334	2530-01-291-4597	154	3
34623	5597344	5342-01-257-7706	35	27
34623	5597347	5310-01-259-7554	328	11
34623	5597349	5306-01-276-1621	283	11
		5306-01-276-1621	438	12
34623	5597350	5340-01-290-6342	417	14
34623	5597351	5365-01-265-8937	283	20
34623	5597356	5340-01-291-4537	417	12
34623	5597357	5340-01-291-8915	418	3
		5340-01-291-8915	419	3
		5340-01-291-8915	420	8
		5340-01-291-8915	421	5
		5340-01-291-8915	422	7
		5340-01-291-8915	423	11
34623	5597360	5340-01-277-4427	155	4
34623	5597371	5330-01-289-9231	425	12
34623	5597372	5340-01-298-9691	417	14
34623	5597396	5340-01-272-3361	219	7
34623	5597397	5340-01-272-5517	219	7
34623	5597496	5995-01-291-6384	428	1
34623	5597571	5340-01-271-9573	220	4
34623	5597572	5340-01-271-9574	220	4
34623	5597579	2510-01-265-1138	211	1
34623	5597580	2510-01-265-1139	211	1
34623	5597593		52	20
34623	5597595	2510-01-290-5675	423	5
34623	5597600	6150-01-285-3901	96	1
34623	5597601		59	1

CROSS REFERENCE INDEXES

PART NUMBER INDEX

CAGE	PART NUMBER	STOCK NUMBER	FIGURE NO	ITEM NO
34623	5597602	5340-01-276-5850	290	1
34623	5597603	5342-01-274-6210	290	1
34623	5597687	5330-01-281-0911	293	29
34623	5597689	7690-01-291-2974	354	6
34623	5597710	5340-01-274-3498	216	1
34623	5597736		56	23
34623	5597737	2540-01-285-6087	56	1
34623	5597738	5930-01-266-4592	55	11
		5930-01-266-4592	56	17
34623	5597753	5330-01-272-9995	219	8
34623	5597754	5340-01-277-4426	219	9
34623	5597768	1640-01-201-9062	311	8
		1640-01-201-9062	312	4
34623	5597777	2520-01-358-3160	140	4
		2520-01-358-3160	147	4
34623	5597808	5340-01-272-9105	288	18
34623	5597820	5340-01-274-3287	260	12
34623	5597826	5365-01-272-4866	237	4
34623	5597827	5340-01-274-3184	237	14
34623	5597842	5340-01-272-8409	215	2
34623	5597870	2510-01-275-8026	211	9
34623	5597890	5342-01-274-9884	155	8
34623	5597895	2510-01-265-3157	293	17
34623	5597900		343	4
34623	5597916	5331-01-265-8809	492	11
9C234	5597929	4710-01-265-3232	492	2
34623	5597935	4710-01-265-3233	492	1
34623	5597961	5365-01-272-4867	237	10
34623	5597985	5330-01-298-8127	340	7
34623	5597988	5340-01-272-3389	58	6
34623	5598002	2990-01-269-6625	337	1
34623	5598011	5930-01-266-3919	58	4
		5930-01-266-3919	396	14
34623	5598032		222	22
34623	5598046	5340-01-272-5595	58	1
34623	5598052	5340-01-288-2127	292	6
34623	5598059	5340-01-272-9145	222	16
34623	5598061		222	20
34623	5598103	5340-01-287-5825	227	35
34623	5598104	2540-01-270-4353	298	6
34623	5598107	5365-01-273-0010	298	9
34623	5598113	5365-01-272-8376	298	5
34623	5598117	5355-01-272-5824	56	24
34623	5598121	5999-01-272-0018	338	12
		5999-01-272-0018	339	9
		5999-01-272-0018	410	12
34623	5598124	5340-01-280-5985	311	16
34623	5598130	5975-01-270-8546	59	2
34623	5598131	5340-01-272-7712	311	1

CROSS REFERENCE INDEXES

PART NUMBER INDEX

CAGE	PART NUMBER	STOCK NUMBER	FIGURE NO	ITEM NO
34623	5598145	5340-01-273-0136	260	5
34623	5598163	5340-01-290-2265	295	2
34623	5598208	5340-01-300-3715	141	13
		5340-01-300-3715	149	7
34623	5598209	2530-01-296-9333	138	8
		2530-01-296-9333	139	8
		2530-01-296-9333	146	8
34623	5598213	3030-01-256-3616	32	2
34623	5598218	5340-01-289-6216	53	1
34623	5598221	5340-01-289-4475	53	2
34623	5598247	3040-01-290-6758	337	16
34623	5598250-B	5340-01-290-2263	337	14
34623	5598253	5340-01-289-3231	337	10
34623	5598256-C	5340-01-290-2761	337	11
34623	5598266	4710-01-265-3228	335	2
		4710-01-265-3228	335	8
		4710-01-265-3228	336	5
34623	5598272	4820-00-287-5627	336	14
34623	5598278	5340-01-289-5055	308	12
34623	5598279	5340-01-288-6550	307	10
		5340-01-288-6550	308	11
34623	5598282		490	11
34623	5598285	5340-01-291-2301	307	5
34623	5598286	5340-01-289-4474	307	11
34623	5598293	5340-01-439-5636	497	3
34623	5598302	5340-01-273-2368	490	6
34623	5598307		497	6
34623	5598309	3040-01-290-6757	337	22
34623	5598310	3040-01-290-6760	337	23
34623	5598315		337	3
34623	5598627	5310-01-286-6077	44	9
34623	5598650	5985-01-269-8271	341	2
34623	5598767	2530-01-203-5746	142	1
		2530-01-203-5746	150	1
34623	5598864	2540-01-425-1617	293	7
34623	5598904	5340-01-289-3245	295	11
7X677	560613	5340-01-148-7529	11	31
86928	5610-140-62	5310-01-256-4491	243	12
		5310-01-256-4491	244	6
70040	5614017	2920-01-188-3863	20	1
99688	56480	5331-00-185-0075	467	11
19220	565698-4	5315-01-300-3012	280	24
		5315-01-300-3012	281	24
7X677	5667628	5310-00-166-8567	172	17
7X677	5688037	5360-01-149-6308	176	9
48018	5688049	5330-00-848-4439	176	11
52788	5692682		176	8
19207	5703776	2920-00-472-1723	KITS	68
19207	5703776-1	2920-01-222-2183	KITS	69

CROSS REFERENCE INDEXES

PART NUMBER INDEX

CAGE	PART NUMBER	STOCK NUMBER	FIGURE NO	ITEM NO
19207	5704052	2540-00-200-4249	KITS	70
34623	5705606	2530-01-191-8740	KITS	71
34623	5705611	2540-01-314-0142	397	KIT
19207	5705612	2530-01-321-4497	436	KITS
19207	5705613	2590-01-337-4071	433	KITS
19207	5705615	2540-01-314-9320	381	KIT
19207	5705618	2540-01-300-8745	KITS	72
19207	5705619	2540-01-300-8744	KITS	73
19207	5705623	2920-01-378-8035	434	KITS
19207	5705624	5975-01-417-3267	435	KITS
19207	5705628	2815-01-314-7940	1	1
19207	5705692	2540-01-199-2390	378	KITS
34623	5705698	2540-01-317-0728	372	KIT
19207	5705703	2540-01-320-8731	401	KIT
34623	5705704	2540-01-302-2595	432	KITS
34623	5714222	3040-01-452-9065	129	8
34623	5714229	2520-01-413-1902	129	18
34623	5714233	5310-01-416-3009	130	28
34623	5714499	3950-01-435-1632	458	28
34623	5714585	2920-01-461-1065	98	5
34623	5714588	2540-01-463-0200	98	2
34623	5714648	5962-01-430-0208	50	4
34623	5715160	2530-01-449-2495	143	22
		2530-01-449-2495	151	22
34623	5715668	5950-01-480-5377	119	11
34623	5715895	5962-01-480-5247	50	4
34623	5715925G1	2510-01-359-2076	198	26
34623	5715976	2590-01-466-7250	273	6
34623	5716028	5962-01-497-1611	50	4
34623	5716242	2540-01-476-6609	188	25
34623	5716414		KITS	75A
34623	5740008	5307-01-174-8640	128	68
		5307-01-174-8640	129	7
34623	5740013	2520-01-168-7878	128	60
34623	5740017	5330-01-168-3870	128	66
		5330-01-168-3870	129	3
34623	5740018	2520-01-189-9750	128	4
34623	5740090	2520-01-178-9768	128	72
34623	5740091	3040-01-176-9584	128	76
34623	5740092	3040-01-177-2427	128	46
34623	5740093	3040-01-177-2428	128	36
34623	5740099	5331-01-174-8618	128	77
34623	5740100	5365-01-174-8185	128	29
34623	5740104	3010-01-176-0557	128	39
34623	5740105	3020-01-148-9548	128	41
34623	5740108	3020-01-175-6477	128	32
34623	5740109	3120-01-155-8713	128	43
34623	5740114	2520-01-162-8985	132	3
		2520-01-162-8985	132	7

CROSS REFERENCE INDEXES

PART NUMBER INDEX

CAGE	PART NUMBER	STOCK NUMBER	FIGURE NO	ITEM NO
		2520-01-162-8985	132	14
		2520-01-162-8985	132	21
34623	5740115	5360-01-174-8613	132	5
34623	5740116		132	8
34623	5740117	3020-01-175-1962	128	75
34623	5740118	3120-01-174-8156	128	78
34623	5740119	2520-01-175-6401	128	13
34623	5740125	2520-01-174-5919	132	11
34623	5740126	5360-01-174-8614	132	10
34623	5740218	3020-01-174-7810	128	79
34623	5740219	5365-01-174-8154	128	28
34623	5740220	3040-01-176-2835	132	9
34623	5740221	2520-01-176-2840	132	12
34623	5740222	2520-01-174-9287	128	26
34623	5740223	2590-01-159-8757	132	2
		2590-01-159-8757	132	15
34623	5740224	5365-01-305-7067	128	22
		5365-01-305-7067	130	25
34623	5740225	2520-01-149-4993	128	61
		2520-01-149-4993	129	33
34623	5740226		132	4
34623	5740227	2520-01-175-6494	132	1
34623	5740228	5365-01-174-8184	KITS	74
34623	5740229	3110-01-175-3538	KITS	75
34623	5740230	5310-01-174-8158	128	11
		5310-01-174-8158	130	22
34623	5740231	3040-01-176-9615	128	53
34623	5740232	2520-01-173-9673	128	58
34623	5740233	2520-01-174-9291	128	5
34623	5740235	3120-01-174-8155	128	33
34623	5740236	3120-01-174-8631	128	34
34623	5740237	3120-01-174-8630	128	35
34623	5740253	5310-01-189-8468	34	4
34623	5740255		138	9
34623	5740256	3040-01-188-3607	145	9
34623	5740257		138	10
			145	10
34623	5740258		138	3
			145	3
34623	5740269	5306-01-497-4738	9	7
34623	5740278	5360-01-190-6214	34	11
34623	5740279	2520-01-174-9288	128	31
34623	5740321	2530-01-181-3907	100	14
34623	5740429		176	3
34623	5740430		176	2
34623	5740431		176	5
34623	5740432	4320-01-155-5145	176	6
34623	5740433	4820-01-083-7993	176	10
34623	5740436	5331-01-157-1884	176	14
34623	5740442		172	4
34623	5740444	5310-01-038-8500	172	1

CROSS REFERENCE INDEXES

PART NUMBER INDEX

CAGE	PART NUMBER	STOCK NUMBER	FIGURE NO	ITEM NO
34623	5740446		172	2
34623	5740448	2530-01-097-7659	172	3
34623	5740452	5330-01-096-9650	172	19
34623	5740453	3110-00-403-1488	172	20
34623	5740454		172	5
34623	5740456	5340-00-960-9340	172	22
34623	5740458	2530-01-034-1715	172	21
34623	5740462	3040-01-123-4942	172	8
34623	5740464		176	4
34623	5740465	2530-01-033-1855	172	9
34623	5740476	3110-01-040-6541	172	7
34623	5740495	4820-01-306-6838	172	14
34623	5740497	4820-01-303-3982	172	15
34623	5740498		172	16
34623	5740499	2530-00-960-9363	172	13
34623	5740503	2520-01-206-3875	128	69
34623	5740504	5360-00-735-1126	128	57
34623	5740505	5306-01-174-8492	128	56
34623	5740512	3020-01-177-5441	128	24
		3020-01-177-5441	128	48
34623	5740514	2520-01-206-3877	128	9
34623	5740515		128	62
34623	5740517		128	30
34623	5740519		128	3
34623	5740520		128	6
34623	5740521		128	6
34623	5740522		128	6
34623	5740523		128	6
34623	5740524		128	6
34623	5740525		128	6
34623	5740526		128	49
34623	5740549	5365-01-383-1925	138	5
		5365-01-383-1925	145	5
34623	5740550		138	11
			145	11
34623	5740551	3040-01-189-1637	138	7
34623	5740552	3040-01-190-3574	138	9
34623	5740702		10	9
34623	5740908		156	8
34623	5740909	5360-01-185-8809	156	7
34623	5740910		156	5
34623	5740911		156	6
34623	5740912	5305-01-185-4628	156	2
34623	5740913	5315-01-290-3327	156	10
34623	5740916	5310-01-185-8691	156	12
34623	5741060	2520-01-204-0325	132	6
34623	5741062	5331-01-209-7726	131	3
34623	5741063	2520-01-203-9871	131	4
34623	5741074	5305-01-209-7667	128	12

CROSS REFERENCE INDEXES

PART NUMBER INDEX

CAGE	PART NUMBER	STOCK NUMBER	FIGURE NO	ITEM NO
34623	5741075	5305-01-209-7668	128	17
		5305-01-209-7668	130	26
34623	5741076	3110-01-155-2600	128	67
34623	5741077	5365-01-209-7713	128	71
34623	5741083	9905-01-158-7981	357	4
34623	5741084	5305-01-211-7415	357	5
34623	5741098	5325-01-212-2403	138	6
		5325-01-212-2403	145	6
34623	5741120	5342-01-211-5327	45	60
34623	5741141	5330-01-211-1343	156	9
34623	5741145	5310-01-038-8501	172	10
34623	5741221	5330-01-291-4615	BULK	46
34623	5741427	5310-01-272-3311	494	9
		5310-01-272-3311	496	6
34623	5741471	5330-01-270-8317	343	7
34623	5741475	5310-01-270-5394	343	22
34623	5741525	2510-01-273-0572	343	8
34623	5741547		138	2
			145	2
34623	5741548	5340-01-311-3033	138	4
		5340-01-311-3033	145	4
34623	5741611	4710-01-185-6179	10	3
34623	5741613	5340-01-384-9987	4	18
34623	5741746		176	7
34623	5741748	2530-01-265-3153	157	4
34623	5741750	2530-01-265-3148	157	4
34623	5741892	5330-00-843-9235	172	12
34623	5741908	2540-01-289-8330	KITS	79
34623	5741994	5360-01-265-8799	157	3
34623	5741995	5360-01-265-8798	157	3
34623	5742041	2540-01-288-8567	KITS	80
34623	5743156	5355-01-460-4586	98	3
34623	5743159	2920-01-476-2716	98	10
34623	5743744	2520-01-413-1900	129	9
19207	57K0106	2590-01-328-2904	437	KITS
19207	57K0107	2510-01-364-3120	KITS	46
19207	57K0109	2540-01-288-5240	KITS	47
19207	57K0112	2540-01-316-0892	452	4
19207	57K0123	2540-01-316-6624	321	KIT
19207	57K0137	2540-01-394-4454	375	KIT
19207	57K0158	2540-01-329-8074	323	KIT
19207	57K0216	2540-01-338-8081	402	KIT
19207	57K0217	2510-01-338-8087	209	KIT
19207	57K0218	2590-01-342-4918	433	KITS
34623	57K0220	2540-01-395-8771	402	KIT
19207	57K0222	5340-01-476-7263	433	KIT
19207	57K0223	5340-01-412-0141	KITS	48
19207	57K0227	2510-01-274-4234	455	KIT
19207	57K0237	2640-01-371-8332	KITS	49

CROSS REFERENCE INDEXES

PART NUMBER INDEX

CAGE	PART NUMBER	STOCK NUMBER	FIGURE NO	ITEM NO
19207	57K0239	5330-01-361-8013	KITS	50
19207	57K0240	5330-01-361-8014	KITS	51
19207	57K0241	5330-01-361-8015	KITS	52
19207	57K0242	2530-01-361-8012	KITS	53
19207	57K0262	2530-01-459-0367	KITS	54
34623	57K0264	2530-01-407-3977	KITS	55
19207	57K0274	2530-01-394-3748	KITS	56
19207	57K0285	2590-01-418-0310	457	KIT
19207	57K0297	2640-01-419-6205	KITS	57
19207	57K1640	5340-01-410-7036	453	KITS
19207	57K1641		440	KITS
34623	57K1641		452	1
19207	57K3196	2540-01-410-7035	454	KIT
19207	57K3197	2540-01-410-7034	454	KITS
34623	57K3205	2530-01-413-8886	KITS	58
19207	57K3206	2510-01-431-1339	460	KIT
19207	57K3209	2540-01-431-9182	459	KIT
19207	57K3213	2540-01-424-7363	461	KIT
34623	57K3217	2590-01-418-2135	457	KIT
19207	57K3218	5180-01-408-7050	511	KIT
19207	57K3219	5180-01-410-8467	511	KIT
19207	57K3222	2540-01-431-1338	KITS	59
19207	57K3223	2815-01-410-9710	1	1
19207	57K3226	2815-01-406-6675	1	1
19207	57K3233	2590-01-420-4179	485	KIT
19207	57K3238	5980-01-438-8939	KITS	60
19207	57K3488	2590-01-429-3008	486	KIT
19207	57K3489	5330-01-459-6477	KITS	61
34623	57K3492	2540-01-467-8313	464	KIT
34623	57K3495	2540-01-467-8341	464	KIT
19207	57K3498	2520-01-434-0822	126	2
		2520-01-434-0822	127	2
19207	57K3502	2520-01-430-5294	KITS	62
19207	57K3503	4720-01-471-5063	487D	KIT
19207	57K3505	2520-01-469-9893	126	1
19207	57K3506	2520-01-473-5029	126	1
19207	57K3507	2520-01-452-8365	126	1
19207	57K3512	2530-01-455-9330	KITS	63
19207	57K3515	2530-01-457-1337	KITS	64
19207	57K3519	2920-01-455-1626	474	KIT
19207	57K3523	2520-01-439-6830	KITS	65
19207	57K3524	2815-01-439-6665	1	1
19207	57K3525	2815-01-439-6664	1	1
19207	57K3527	2530-01-443-3405	KITS	66
19207	57K3532	5999-01-474-3213	484	KIT
19207	57K3534	4130-01-452-8773	466	KIT
19207	57K3536	2815-01-453-7403	1	1
19207	57K3537	2815-01-453-7404	1	1
19207	57K3539	2520-01-461-7072	KITS	67

CROSS REFERENCE INDEXES

PART NUMBER INDEX

CAGE	PART NUMBER	STOCK NUMBER	FIGURE NO	ITEM NO
19207	57K3541	2590-01-456-7879	471	KIT
19207	57K3542	5340-01-455-8700	439	KIT
19207	57K3543	2815-01-461-7078	1	1
19207	57K3547	2815-01-472-6312	1	1
19207	57K3549	2520-01-461-7074	KITS	67A
19207	57K3553	2990-01-496-3766	398	KIT
19207	57K3555	2815-01-461-7078	1	1
19207	57K3556	2815-01-439-6664	1	1
19207	57K3558	2520-01-473-7410	KITS	67B
19207	57K3566	2815-01-461-7078	1	1
19207	57K3567	2815-01-439-6664	1	1
19207	57K3569	2520-01-489-0849	KITS	67C
19207	57K4387	2510-01-491-6919	462	KIT
99688	585810	4130-01-171-5997	494	13
99688	58583	4820-01-161-6435	496	10
99688	586230	4520-01-192-6073	343	9
99688	58668	5355-01-167-4114	54	7
99688	58701	9320-01-085-2889	494	21
34623	5903101	5935-01-216-8763	76	9
60602	59267-1	5355-01-447-9655	98	4
34623	5933947	5340-01-272-5611	213	38
34623	5933974	5310-01-272-4823	292	9
34623	5933977	5340-01-270-8432	259	2
34623	5934007	5310-00-177-7529	256	4
		5310-00-177-7529	257	1
		5310-00-177-7529	260	4
34623	5934065	4010-01-266-3842	292	18
34623	5934085	5330-01-274-6106	296	5
34623	5934184	5330-01-265-8805	214	25
34623	5934219	4130-01-278-9837	495	10
34623	5934310		341	6
34623	5934761	5310-01-480-4161	33	8
34623	5935091	5340-01-293-0125	35	24
		5340-01-293-0125	42	1
34623	5935092	5340-01-292-8404	37	12
		5340-01-292-8404	38	3
		5340-01-292-8404	42	1
		5340-01-292-8404	475	12
34623	5935093	5340-01-292-5402	42	9
34623	5935102		221	3
34623	5935356	2930-01-317-5358	28	5
34623	5935390	3020-01-364-3398	148	27
34623	5935391		148	28
34623	5935392		148	29
34623	5935394	2520-01-357-5043	136	16
34623	5935425	5340-01-388-9512	KITS	81
34623	5936107	2520-01-357-5056	148	25
34623	5937339	2520-01-357-5044	137	18
34623	5937387	2520-01-356-9197	127	3

CROSS REFERENCE INDEXES

PART NUMBER INDEX

CAGE	PART NUMBER	STOCK NUMBER	FIGURE NO	ITEM NO
34623	5938607	3130-01-360-1051	129	21
		3130-01-360-1051	130	36
34623	5938619	3120-01-360-1202	129	12
34623	5938621	3130-01-360-1050	129	15
34623	5938630	5365-01-358-4642	132	24
34623	5938633	5360-01-358-6564	132	26
34623	5938653	3120-01-360-5960	130	46
34623	5938654	3110-01-359-8858	130	45
34623	5938663	3020-01-359-2529	130	43
34623	5938665	5315-01-464-0812	130	24
34623	5938666	4730-01-359-2217	130	14
34623	5938685	2520-01-174-9554	129	32
34623	5938705	6220-01-361-5084	67	8
34623	5939396	2530-01-357-9708	164	1
34623	5939517	5330-01-487-7129	148	16
73331	5939841	5330-00-353-0959	63	10
34623	5982526	5310-01-198-1722	53	5
		5310-01-198-1722	277	20
34623	5982528	5310-01-198-1723	446	21
		5310-01-198-1723	448	6
		5310-01-198-1723	450	6
34623	5993089	5340-01-276-3615	220	7
		5340-01-276-3615	237	1
34623	5995301	5340-01-158-0098	79	4
34623	5995488	5365-01-274-4675	95	38
35510	59982S	5310-00-429-3156	39	44
81343	6-2 010102B	4730-00-439-6021	335	1
78189	6-321-4	5305-00-638-0714	35	17
		5305-00-638-0714	43	55
81343	6-4 010103B	4730-00-270-4606	335	16
		4730-00-270-4606	336	13
34623	6000300	5340-01-408-5851	16	30
34623	6000329	5330-01-420-0705	16	40
34623	6000331	5330-01-410-9840	16	39
34623	6000333	5330-01-411-0367	16	31
34623	6000334		16	34
34623	6001552	2540-01-473-9045	470	9
34623	6001553	2540-01-473-9040	470	9
34623	6001696	2520-01-409-1602	134	3
34623	6001784	5365-01-456-2032	143	30
		5365-01-456-2032	151	30
34623	6002218	2530-01-420-7904	157	23
		2530-01-420-7904	158	13
34623	6002219	5340-01-432-8680	140	9
34623	6002224	5340-01-432-4876	182	12
34623	6002226	5340-01-432-8678	183	20
34623	6002227	5340-01-437-8748	183	20
34623	6002343	5340-01-438-4497	189	10
34623	6002344	5340-01-434-2832	189	7

CROSS REFERENCE INDEXES

PART NUMBER INDEX

CAGE	PART NUMBER	STOCK NUMBER	FIGURE NO	ITEM NO
34623	6002346	5340-01-433-2721	190	5
89944	60025077004	4720-00-006-0048	BULK	63
34623	6002607	2520-01-413-0080	136	16
34623	6002629	2520-01-423-5120	136	6
34623	6002771	4710-01-409-2504	125	4
34623	6002779	4710-01-409-2508	125	3
34623	6002942	5307-01-411-2336	103	14
34623	6003666	2520-01-413-2724	137	18
34623	6003868	2530-01-420-3837	170	6
34623	6004838	2530-01-420-5180	170	7
34623	6004839	2530-01-420-3839	170	2
34623	6004872	2510-01-456-2277	194	3
27647	6005	5342-01-205-2519	314	26
34623	6005120	2530-01-433-8003	143	35
		2530-01-433-8003	151	19
34623	6005121	2530-01-433-8702	143	19
		2530-01-433-8702	151	35
34623	6005193	5330-01-456-8823	143	20
		5330-01-456-8823	151	20
34623	6005274-B1	2510-01-423-2877	195	3
34623	6005790-A	2520-01-413-2595	98	1
001Y9	600634	3020-01-491-2671	33B	9
001Y9	600635	3020-01-491-0776	33A	12
001Y9	600636	3020-01-491-2659	33B	6
001Y9	600637	2920-01-491-2011	33A	18
001Y9	600638	5340-01-491-2205	33A	13
		5340-01-491-2205	33B	5
001Y9	600639	5310-01-490-7461	33B	10
001Y9	600640	5310-01-491-2148	33B	11
34623	6006645	3040-01-422-9390	144	17
		3040-01-422-9390	152	17
34623	6007749	2520-01-459-0050	137	18
34623	6007755	2530-01-413-1366	144	8
		2530-01-413-1366	152	8
34623	6008558	2540-01-466-3849	463	4
19204	6008993	5305-00-600-8993	324	38
34623	6009349		143	25
			151	25
34623	6009352	2530-01-413-3653	143	1
		2530-01-413-3653	151	1
34623	6009452	3020-01-476-2701	143	38
		3020-01-476-2701	151	38
34623	6009453	3020-01-432-2553	143	10
		3020-01-432-2553	151	10
34623	6009454	5310-01-473-3373	143	8
		5310-01-473-3373	151	8
34623	6009472	5330-01-174-8145	148	14
34623	6010942	2520-01-174-9580	148	12
34623	6013199	2530-01-420-8634	144	20
			152	20

CROSS REFERENCE INDEXES

PART NUMBER INDEX

CAGE	PART NUMBER	STOCK NUMBER	FIGURE NO	ITEM NO
00779	60187-2	5940-01-474-5066	92	8
93334	6023054	5310-00-471-9243	131	2
42280	61-0542-1	5310-00-809-4058	80	16
81834	61-2028-01	5330-01-218-1196	64	7
70082	6185	5307-01-316-2986	329	14
99688	62229	5310-01-161-7308	54	13
7X677	6259194	5325-01-205-5966	129	11
81646	62606	4730-00-024-3971	13	10
		4730-00-024-3971	14	16
		4730-00-024-3971	19	21
70412	62886	5305-01-229-7855	327	3
77060	6288634-L	5940-01-269-8396	95	19
7Z588	63060	4730-01-273-7660	343	11
63829	6320-9620	4320-01-290-0748	491	26
35510	6385	6150-01-269-1854	39	65
70082	6388	2540-01-314-1188	329	2
70082	6389	5340-01-315-3611	329	10
70082	6390	2540-01-314-2101	329	5
94222	64-10-201-90	5340-01-277-4613	215	7
19220	6411B	5340-00-489-5684	269	8
73342	6437741		104	6
70040	6472357	2910-01-168-7905	9	1
81300	6490610019	4720-01-186-2358	BULK	23
76760	6500318	5306-01-359-4529	129	1
99688	65139	5930-01-165-1657	55	18
99688	65140	5930-01-163-6256	55	7
99688	65158	5905-01-154-2354	498	6
99688	65171	5930-01-190-1231	54	9
12436	667201-011	5905-00-258-6788	59	12
24975	66X-3331	5310-01-250-7844	45	29
7Z588	6706	4730-00-024-3971	366	21
81646	6772-1	4730-00-359-9487	12	4
27647	6779	5310-01-213-4174	314	34
82942	68-412121-1	5330-01-281-6523	BULK	52
73342	6884730	5325-01-171-3392	109	5
		5325-01-171-3392	111	9
80604	6888	5120-01-437-0480	511	8
60285	6893-2	5306-00-068-0513	68	6
		5306-00-068-0513	379	24
		5306-00-068-0513	379	29
		5306-00-068-0513	388	15
70485	698W	5340-00-565-5378	273	12
17446	6LC-2R06	5320-00-864-6203	199	48
19207	6TLMFTYI	6140-01-446-9498	69	23
19728	6X-4336		45	23
12361	7-099-000154	5305-00-993-1848	251	31
19220	7-1910	2540-01-270-2250	213	5
		2540-01-270-2250	214	33
19220	7-2414	5340-01-270-8435	213	28

CROSS REFERENCE INDEXES

PART NUMBER INDEX

CAGE	PART NUMBER	STOCK NUMBER	FIGURE NO	ITEM NO
		5340-01-270-8435	214	18
76445	70112	2510-01-189-1832	193	4
76445	70113	2510-01-190-3862	193	4
76445	70114	2510-01-251-5316	193	4
78385	702903	5330-00-089-0978	348	20
78385	703546	5340-01-236-5101	345	32
		5340-01-236-5101	348	23
78385	703547	5306-01-351-7742	345	23
		5306-01-351-7742	348	22
78385	703611	5305-01-288-1130	349	5
78385	704181	2540-01-168-9482	350	9
		2540-01-168-9482	351	9
78385	704190	5310-01-137-6801	350	8
		5310-01-137-6801	351	8
78385	704191	5310-01-164-0745	351	5
78385	704192		351	6
78385	704206	5305-01-097-8178	350	10
78385	704225	2540-00-216-5722	348	18
78385	704363	4710-01-163-2805	345	33
		4710-01-163-2805	348	28
19207	7044253	5360-00-704-4253	191	22
78385	704501	9905-01-017-4748	348	10
78385	704678	5310-01-164-1023	350	7
		5310-01-164-1023	351	7
78385	705032	5305-01-066-3431	350	12
78385	705068	5310-01-057-3098	351	3
78385	705117		351	10
78385	705211	5305-01-288-1129	349	7
78385	705237	5310-01-063-8522	351	2
78385	705267	5975-01-288-6594	345	11
78385	705587		350	1
19207	7056640	5970-01-174-9449	73	19
		5970-01-174-9449	73	23
		5970-01-174-9449	480	27
78385	705930	5310-01-287-8726	345	13
78385	705944		350	3
			351	4
78385	706015	9905-01-283-7937	345	17
78385	706025	7690-01-283-7938	345	4
78385	706041	2540-01-290-0715	345	36
78385	706045	5905-01-287-4256	349	11
78385	706049		350	5
78385	706050GV	5310-01-287-6557	349	12
78385	706053	5905-01-287-4255	349	3
78385	706062		350	4
78385	706063		350	6
78385	706070	5940-01-292-6907	345	6
78385	706074	5305-01-290-6290	345	5
78385	706131	5310-01-287-6543	345	27

CROSS REFERENCE INDEXES

PART NUMBER INDEX

CAGE	PART NUMBER	STOCK NUMBER	FIGURE NO	ITEM NO
19207	7063812	5310-00-126-3842	169	7
19207	7064829	5940-00-520-2447	313	18
77335	71-510	5120-00-618-6902	504	14
13008	7168	5340-01-233-1461	240	14
78385	718768-23	5331-00-089-0998	345	21
		5331-00-089-0998	348	21
73680	71X6284	5330-00-497-4633	128	8
70082	7243	5365-01-315-3595	329	4
19207	7261674	5935-00-338-2822	282	13
35510	7266	5310-01-272-4831	39	48
19207	7320533	5940-00-549-6583	69	18
19207	7331407	5342-00-678-1753	160	18
		5342-00-678-1753	162	18
		5342-00-678-1753	487A	8
19207	7346712	5306-00-182-2027	373	11
19207	7355392	5340-00-408-2432	191	24
19207	7355393	3040-00-127-5322	191	23
19207	7355396	5310-00-735-5396	191	26
19207	7355520	5940-00-735-5520	69	36
19207	7358626	5330-00-297-6329	47	14
19207	7370134	5315-00-737-0134	403	9
19207	7385182	5340-00-738-5182	457	8
19207	7397780	5340-00-438-1836	477	9
19207	7397934	5340-01-408-7091	261	13
35510	74107	5310-01-270-8415	39	22
7X677	7471009	3110-01-480-5240	107	2
30327	75167	4730-00-541-0793	31	1
19207	7524314	2540-00-525-7067	191	15
19207	7527645	5975-00-697-7769	85	12
		5975-00-697-7769	86	17
19207	7529300	5365-01-129-0399	271	13
19207	7538146	5305-00-353-0969	62	18
19207	7539072	5330-00-753-9072	67	5
35510	75451	5310-00-429-3453	39	42
96508	760-2601	5340-01-265-8895	262	6
19207	7700242	5331-00-770-0242	387	15
19207	7700243	5310-00-770-0243	387	16
19207	7716634	5975-00-771-6634	85	17
		5975-00-771-6634	86	10
19207	7720442	5310-00-772-0442	36	6
		5310-00-772-0442	38	6
		5310-00-772-0442	43B	3
19207	7721654	5340-00-438-1833	313	4
		5340-00-438-1833	443	4
19207	7722322	5365-00-772-2322	80	9
		5365-00-772-2322	84	27
		5365-00-772-2322	85	9
		5365-00-772-2322	86	5
19207	7722333	5365-00-090-5426	83	36

CROSS REFERENCE INDEXES

PART NUMBER INDEX

CAGE	PART NUMBER	STOCK NUMBER	FIGURE NO	ITEM NO
		5365-00-090-5426	85	18
		5365-00-090-5426	86	11
19207	7722353	5935-00-772-2353	84	26
		5935-00-772-2353	86	23
19204	7723307	5935-00-772-3307	85	14
		5935-00-772-3307	86	19
19207	7723308	5935-00-333-9414	80	10
		5935-00-333-9414	84	28
		5935-00-333-9414	85	10
		5935-00-333-9414	86	6
19207	7723309	5310-00-393-6685	83	37
		5310-00-393-6685	85	19
		5310-00-393-6685	86	12
19207	7725882	5310-00-167-0822	194	6
16528	7728777	5940-00-983-4067	79	7
		5940-00-983-4067	485	1
19207	7728780	5940-01-035-4212	79	9
		5940-01-035-4212	485	2
19207	7731428	5935-00-773-1428	83	28
		5935-00-773-1428	88	45
19207	7748814	2910-00-073-0165	334	1
03007	7792 LH-02	2540-01-271-5072	237	8
03007	7792RH02	5340-01-272-9103	237	8
35510	77960	3120-01-270-2645	39	18
52788	7817725	2530-01-033-4237	172	11
52788	7818445		172	4
7X677	7830239	5305-01-162-9713	176	12
7X677	7830913	4320-01-155-5153	176	13
7X677	7834183	6680-01-152-2845	176	1
7X677	7834284	4820-01-191-4262	172	6
7X677	7846626	2530-01-123-8787	KITS	82
52788	7848522	5330-01-044-0703	KITS	83
7X677	7849306	2815-01-449-5585	4	6
19207	7951057	2540-00-177-8108	393	14
19207	7951748	5935-00-790-4614	56	11
19207	7973326	9905-00-901-2942	357	7
19207	7982843	5310-01-255-2704	164	2
19207	7982907	5935-00-214-0904	40	26
		5935-00-214-0904	86	24
		5935-00-214-0904	366	34
		5935-00-214-0904	386	1
		5935-00-214-0904	472	8
		5935-00-214-0904	475	1
		5935-00-214-0904	479	6
		5935-00-214-0904	483	7
11083	7N7782	5935-01-150-8322	86	26
11083	7N9738	5935-01-149-5165	76	2
		5935-01-149-5165	86	27
81343	8 100110B	4730-01-048-7874	17	6

CROSS REFERENCE INDEXES

PART NUMBER INDEX

CAGE	PART NUMBER	STOCK NUMBER	FIGURE NO	ITEM NO
81343	8 100115B	4730-01-049-1559	17	7
83330	8-1930-0112-912	6210-00-578-7970	311	12
		6210-00-578-7970	312	8
62226	8.6046	2540-01-381-8392	231	1
62226	8.6272-01	2540-01-436-4175	231	6
		2540-01-436-4175	454	1
62226	8.6272-02	2540-01-476-9353	454	1
18876	8034668-159	5970-00-057-9987	44	25
19207	809223	2590-00-454-3620	95	37
		2590-00-454-3620	303	9
		2590-00-454-3620	304	5
		2590-00-454-3620	412	13
60703	81087-5	4730-01-074-0060	327	24
19207	8329899	2540-00-040-2129	271	14
13445	83320	5310-01-186-6930	69	9
19207	8338561	5935-00-833-8561	86	25
		5935-00-833-8561	366	33
		5935-00-833-8561	386	12
		5935-00-833-8561	472	7
		5935-00-833-8561	475	2
		5935-00-833-8561	479	5
		5935-00-833-8561	483	8
19207	8338562	5970-00-833-8562	75	13
		5970-00-833-8562	76	11
19207	8338564	5940-00-399-6676	75	12
19207	8338566	5935-00-572-9180	483	6
19207	8359764	5365-01-318-2066	388	4
63829	8363-6330	5340-01-288-1242	491	24
19207	8380196	2540-01-023-5116	191	12
63829	8385-0520	5331-01-288-1062	467	4
		5331-01-288-1062	491	10
63829	8385-0880	5365-01-287-8701	491	17
63829	8385-6410	5365-01-287-8645	491	9
63829	8385-9611	5330-01-288-1307	KITS	85
63829	8476-9631	2815-01-290-3705	491	23
18876	8486066	4730-00-877-6298	178	9
		4730-00-877-6298	477	4
13445	85031	5310-01-186-7066	69	7
		5310-01-186-7066	70	4
		5310-01-186-7066	473	8
63829	8527-6041	5950-01-289-6007	491	8
27647	8548	5305-01-210-2309	313	19
		5305-01-210-2309	458	42
13445	85764	5310-01-185-7188	69	6
		5310-01-185-7188	70	5
7X677	8623039	5310-01-152-4229	121	12
7X677	8623078	5315-00-038-3059	121	6
7X677	8623090	5360-01-209-7715	121	13
11862	8623101		109	19

CROSS REFERENCE INDEXES

PART NUMBER INDEX

CAGE	PART NUMBER	STOCK NUMBER	FIGURE NO	ITEM NO
11862	8623102		109	8
63005	8623102	2840-00-001-4903	111	5
11862	8623104	3110-00-005-0873	109	6
		3110-00-005-0873	111	8
7X677	8623105	5325-01-171-3392	110	10
		5325-01-171-3392	112	9
7X677	8623112	5325-00-007-3052	109	1
		5325-00-007-3052	110	1
		5325-00-007-3052	111	11
		5325-00-007-3052	112	10
7X677	8623116	3110-01-174-8136	109	16
7X677	8623120	5325-01-150-6092	109	13
7X677	8623121		109	18
11862	8623143		113	14
7X677	8623145	5360-01-153-0933	113	8
7X677	8623149	5325-01-150-7830	113	1
		5325-01-150-7830	114	10
7X677	8623151	2520-01-150-7609	113	3
7X677	8623152	2520-01-175-6492	113	2
7X677	8623153	5325-01-158-2182	113	6
		5325-01-158-2182	114	4
7X677	8623157	4710-01-151-3663	118	6
7X677	8623174	5330-01-150-5928	116	20
11862	8623183		106	6
7X677	8623183		107	4
7X677	8623194		106	24
			107	12
11862	8623196		106	26
7X677	8623196		107	10
7X677	8623202	3020-01-149-7938	106	23
11862	8623204		106	20
7X677	8623204		106	4
			107	6
			107	18
11862	8623206		106	22
7X677	8623206		107	20
7X677	8623211	3120-01-155-4468	113	9
		3120-01-155-4468	114	18
7X677	8623262	2520-01-127-3969	116	17
7X677	8623263	5330-00-001-1984	116	16
7X677	8623292	5340-01-159-1788	121	7
7X677	8623300	3120-01-155-4462	121	17
7X677	8623301	3120-01-155-4463	121	17
7X677	8623302	3120-01-182-8417	121	17
7X677	8623303	3120-01-155-4464	121	17
7X677	8623304	3120-01-155-4465	121	17
7X677	8623305	3120-01-155-4466	121	17
7X677	8623306	3120-01-155-4467	121	17
7X677	8623368	5310-01-149-7793	121	11

CROSS REFERENCE INDEXES

PART NUMBER INDEX

CAGE	PART NUMBER	STOCK NUMBER	FIGURE NO	ITEM NO
7X677	8623430	5330-01-150-6239	116	10
		5330-01-150-6239	117	15
7X677	8623437	5325-01-160-4693	106	32
		5325-01-160-4693	113	5
		5325-01-160-4693	114	5
7X677	8623489	5360-01-150-6086	116	6
		5360-01-150-6086	117	5
7X677	8623561	5330-01-152-5942	118	13
7X677	8623592	4820-01-150-4964	118	11
7X677	8623664	5340-01-154-6559	116	22
		5340-01-154-6559	117	8
7X677	8623666	5360-01-150-7829	116	23
		5360-01-150-7829	117	9
7X677	8623671	5330-01-174-8090	116	12
7X677	8623741	5330-01-151-8364	118	3
7X677	8623744	5310-01-150-5919	116	24
		5310-01-150-5919	117	10
7X677	8623849	2520-01-150-3931	112	15
11862	8623917	5330-01-138-5190	KITS	86
7X677	8623920	3120-01-167-4172	KITS	87
7X677	8623921	3110-01-167-2443	KITS	88
7X677	8623922	3110-01-169-0734	KITS	89
7X677	8623941	3120-01-166-3677	106	29
7X677	8623944	3120-01-156-5189	106	8
		3120-01-156-5189	121	5
7X677	8623978	5330-01-152-5941	121	19
7X677	8624101	5360-01-150-6091	109	7
		5360-01-150-6091	111	7
7X677	8624136	5340-01-149-7811	116	21
7X677	8624138	3040-01-151-5663	116	9
		3040-01-151-5663	117	16
7X677	8624139	5315-01-152-9038	117	7
7X677	8624140	5315-01-152-9039	116	7
		5315-01-152-9039	117	7
7X677	8624141	5315-01-152-9040	116	7
		5315-01-152-9040	117	7
7X677	8624196	3120-01-156-8763	111	15
		3120-01-156-8763	112	14
7X677	8624209	5340-01-408-8522	113	11
		5340-01-408-8522	114	16
		5340-01-408-8522	115	25
7X677	8624256	5360-01-150-6087	116	8
7X677	8624391	5360-01-476-6291	117	6
7X677	8624781	3120-00-255-5697	111	13
		3120-00-255-5697	112	12
11862	8624784		106	5
			106	21
7X677	8624784		107	5
			107	19

CROSS REFERENCE INDEXES

PART NUMBER INDEX

CAGE	PART NUMBER	STOCK NUMBER	FIGURE NO	ITEM NO
7X677	8624908	2520-01-169-7674	111	2
7X677	8625221	5325-01-174-8626	106	19
		5325-01-174-8626	107	21
7X677	8625401	3120-01-154-8516	106	30
		3120-01-154-8516	107	25
7X677	8625402	3120-01-159-5773	106	30
		3120-01-159-5773	107	25
7X677	8625403	3120-01-154-4369	106	30
		3120-01-154-4369	107	25
7X677	8625404	3120-01-161-4033	106	30
		3120-01-161-4033	107	25
7X677	8625405	3120-01-162-5787	106	30
		3120-01-162-5787	107	25
7X677	8625406	3120-01-154-8517	106	30
		3120-01-154-8517	107	25
7X677	8625717	3020-01-149-5049	111	14
7X677	8625736	3040-01-167-2836	106	31
7X677	8625773	2520-01-165-9563	100	13
		2520-01-165-9563	118	8
7X677	8625955	5340-01-149-1867	121	4
7X677	8625990		KITS	90
7X677	8626112	5325-01-168-5729	106	12
7X677	8626173	5325-01-150-4982	106	15
		5325-01-150-4982	107	23
11862	8626252		100	6
7X677	8626281	5310-01-150-5921	121	20
7X677	8626356	5330-01-165-4333	113	12
		5330-01-165-4333	121	18
7X677	8626372	3120-01-154-7174	106	14
		3120-01-154-7174	106	28
		3120-01-154-7174	107	15
		3120-01-154-7174	107	24
7X677	8626423	5330-01-163-2614	116	1
		5330-01-163-2614	117	3
11862	8626806		106	9
7X677	8626807	3020-01-149-7941	106	10
		3020-01-149-7941	107	8
7X677	8626809	3040-01-150-0407	106	7
11862	8626812		113	10
7X677	8626816	5325-01-154-8562	107	1
11862	8626817		106	25
7X677	8626817		107	11
7X677	8626879	5315-01-152-9031	116	4
7X677	8626881	5340-01-151-4964	116	5
7X677	8626884	5310-01-151-4137	116	3
24617	8626916	5330-01-025-4212	121	22
72590	8626982		100	11
7X677	8627153	5330-01-470-1922	116	14
7X677	8627192	5315-01-174-8644	116	7

CROSS REFERENCE INDEXES

PART NUMBER INDEX

CAGE	PART NUMBER	STOCK NUMBER	FIGURE NO	ITEM NO
		5315-01-174-8644	117	7
7X677	8627193	5315-01-174-8645	116	7
		5315-01-174-8645	117	7
7X677	8627194	5315-01-174-8646	116	7
		5315-01-174-8646	117	7
7X677	8627195	5315-01-174-8647	116	7
		5315-01-174-8647	117	7
7X677	8627334	2520-01-149-1868	109	14
		2520-01-149-1868	114	3
7X677	8627379		113	15
11862	8627385	2520-01-149-3809	113	16
11862	8627422		109	10
7X677	8627509	4730-01-149-7935	118	5
7X677	8627627	5330-01-155-4383	113	13
73342	8627650	2520-00-557-6619	100	16
7X677	8627657	5325-01-154-8561	106	3
		5325-01-154-8561	107	3
72590	8627892		106	13
7X677	8627989	2520-01-163-7213	KITS	91
7X677	8629487	3110-01-155-4438	109	15
7X677	8629523	5365-01-153-0872	104	5
7X677	8629526	4710-01-152-5798	104	14
7X677	8629796	2520-01-154-1185	118	14
7X677	8629961	5365-01-085-0910	121	3
7X677	8629991	3040-01-448-9611	104	2
11862	8633056		106	17
11862	8633059	2520-01-168-1983	106	16
11862	8633075		106	1
7X677	8633173	2520-01-461-0092	114	1
7X677	8633208	5306-01-150-9497	104	13
7X677	8637742	4730-01-163-7163	105	3
7X677	8639718	4820-01-212-6763	121	10
7X677	8639743	5305-01-150-9781	4	25
7X677	8648178	5310-01-447-0968	108	3
29930	865168R91	3110-00-436-3248	128	50
7X677	8653985	3120-01-158-6304	106	18
7X677	8654701		105	16
7X677	8654716	5330-01-324-0906	121	2
		5330-01-324-0906	122	6
7X677	8655027	2520-01-160-9570	118	7
72590	8655036	2520-01-212-7634	104	9
11862	8655037		104	10
7X677	8655186	4730-01-177-7501	104	23
		4730-01-177-7501	105	5
7X677	8655280	5306-01-269-4319	121	21
7X677	8655625	5330-01-148-7492	104	7
7X677	8655843	5360-01-478-6550	117	6
7X677	8656613	5330-01-397-0374	105	14
7X677	8656942	2520-01-164-7234	102	1

CROSS REFERENCE INDEXES

PART NUMBER INDEX

CAGE	PART NUMBER	STOCK NUMBER	FIGURE NO	ITEM NO
7X677	8657163	5330-01-251-1607	100	10
		5330-01-251-1607	108	7
73342	8658110	5330-01-043-5572	100	2
		5330-01-043-5572	100	5
7X677	8661271		115	23
7X677	8661568	5325-01-408-7971	115	8
7X677	8661571	2520-01-409-1758	115	18
7X677	8661572	5325-01-408-7970	115	16
7X677	8661577	2520-01-410-8241	115	27
7X677	8661578	5325-01-461-7157	115	28
7X677	8661579	2520-01-411-3959	115	21
7X677	8661582	2520-01-409-1751	115	9
7X677	8661598	3040-01-410-8071	107	22
7X677	8661602	5330-01-379-1139	122	4
7X677	8661613	3040-01-410-8068	107	13
7X677	8661623	2520-01-461-0083	115	13
7X677	8661629	2520-01-461-0085	115	7
7X677	8661639	5330-01-470-6543	120	4
7X677	8661647		120	6
7X677	8661658		114	12
7X677	8661682		122	7
7X677	8661683		122	8
7X677	8661692	5315-01-460-9907	108	11
7X677	8661693	3040-01-460-9964	108	13
7X677	8661708	3040-01-447-3797	107	7
7X677	8661709	4330-01-411-2786	119	17
7X677	8661760	5330-01-414-6607	122	2
7X677	8661762	5306-01-461-3557	105	12
7X677	8661764	2520-01-461-0099	110	9
		2520-01-461-0099	112	8
7X677	8661766	4810-01-460-9975	122	16
7X677	8661767	5360-01-408-7977	122	15
7X677	8661768	5315-01-461-5649	122	14
7X677	8661789	5331-01-462-7294	122	32
7X677	8661792	5306-01-411-1596	122	1
7X677	8661798	5360-01-460-9070	122	23
7X677	8661801		119	4
7X677	8661804		119	12
7X677	8661805		119	14
11862	8661807		119	21
7X677	8661821		119	16
7X677	8661822		119	19
7X677	8661829		120	25
7X677	8661834	2520-01-461-2374	105	22
7X677	8661837	2520-01-478-6607	112	11
7X677	8661838	5315-01-461-8374	122	10
7X677	8661867		119	18
7X677	8661871		119	25
7X677	8661873		119	15

CROSS REFERENCE INDEXES

PART NUMBER INDEX

CAGE	PART NUMBER	STOCK NUMBER	FIGURE NO	ITEM NO
7X677	8661890		117	14
7X677	8661891	5360-01-460-9069	119	3
7X677	8661893	5330-01-460-8987	115	4
24617	8661894	5330-01-468-3604	115	1
7X677	8665830		105	16
7X677	8670200	2520-01-163-7866	109	11
		2520-01-163-7866	111	6
7X677	8670201	2520-01-192-1260	109	9
7X677	8670393	5330-01-151-6106	118	1
7X677	8670447	5330-01-330-9645	118	13
7X677	8670452	2520-01-502-6586	118	14
7X677	8670458	5330-01-331-9995	118	1
7X677	8675508	3040-01-493-4036	112	7
61928	8675511	2520-01-413-5540	110	8
7X677	8675517	5330-01-460-8988	105	7
7X677	8675519	2520-01-461-0073	114	9
7X677	8675520		114	2
7X677	8675521	2520-01-479-0847	114	8
7X677	8675522	2520-01-461-0074	114	7
7X677	8675523	5325-01-408-7969	115	11
7X677	8675524	5325-01-460-9908	105	8
7X677	8675529	5340-01-460-8207	105	20
7X677	8675533	5306-01-469-9903	120	3
7X677	8675535		119	9
7X677	8675537	5340-01-493-9134	120	17
7X677	8675539	5340-01-447-5839	78	3
7X677	8675557	2520-01-461-0076	110	2
7X677	8675558	5340-01-476-0352	110	14
7X677	8675578		109	12
7X677	8675611	3040-01-480-7536	107	14
7X677	8675612	2520-01-461-0107	107	14
7X677	8675634	5360-01-469-8077	120	22
7X677	8675728	5330-01-478-4797	117	18
7X677	8675729	5330-01-409-1664	114	15
11862	8675732		119	6
7X677	8676000	5306-01-491-9414	117	20
7X677	8676074		119	20
7X677	8676222	5306-01-476-3501	120	14
7X677	8676418	5340-01-474-4002	120	21
7X677	8677091	3020-01-479-2069	112	13
24617	8677483		110	6
7X677	8677571	3120-01-461-6679	122	31
7X677	8677572	3120-01-471-7844	122	31
7X677	8677573	3120-01-411-5783	122	31
7X677	8677574	3120-01-411-5787	122	31
7X677	8677575	3120-01-461-6677	122	31
7X677	8677582		110	7
			112	4
7X677	8677583		112	6

CROSS REFERENCE INDEXES

PART NUMBER INDEX

CAGE	PART NUMBER	STOCK NUMBER	FIGURE NO	ITEM NO
7X677	8677743	5330-01-360-5271	105	17
7X677	8677782	5330-01-409-1665	122	30
7X677	8677887	5325-01-408-7972	115	10
7X677	8678122	5315-01-408-8020	108	8
7X677	8678257	4820-01-460-9991	122	13
7X677	8678258	5360-01-460-9068	122	12
7X677	8678292		117	12
7X677	8678294		117	11
7X677	8678337	4820-01-409-1218	119	22
7X677	8678347	5315-01-447-0492	108	4
7X677	8678523	5340-01-460-8364	119	27
7X677	8678537	3040-01-149-6759	116	2
7X677	8679439	5325-01-412-8806	115	12
7X677	8679465	5325-01-477-6608	122	22
7X677	8679940	2520-01-150-2279	111	10
7X677	8679943	4820-01-147-4294	100	3
7X677	8679950	3040-01-149-6706	111	1
7X677	8679960	3040-01-266-2122	109	17
7X677	8679975	2520-01-151-3857	116	15
72590	8679988	4320-01-149-1866	121	1
7X677	8679990	2520-01-164-7158	100	9
7X677	8680547	4820-01-460-8288	122	24
7X677	8680548	3120-01-461-6680	122	19
7X677	8680549	4820-01-461-0011	122	20
7X677	8680551	5360-01-460-9073	122	18
61928	8680816	2520-01-392-8435	110	11
		2520-01-392-8435	112	17
7X677	8680911	2520-01-410-8067	KITS	93
7X677	8680914	2520-01-174-8153	KITS	94
7X677	8680915	2520-01-410-8077	KITS	95
7X677	8680918	2520-01-410-8079	115	5
7X677	8680929	2520-01-164-7157	116	11
		2520-01-164-7157	KITS	97
72590	8680938	2520-01-168-2060	113	4
7X677	8681069	5360-01-460-9072	122	28
7X677	8681070	4820-01-460-9988	122	27
7X677	8681449	2520-01-461-0078	115	17
11862	8681620	2530-01-159-2732	106	27
7X677	8681899		119	26
11862	8682194		122	5
7X677	8682215	5340-01-479-2514	117	19
7X677	8682802	2520-01-439-5265	112	1
		2520-01-439-5265	115	20
7X677	8682855	2520-01-461-5133	122	25
7X677	8682856	5340-01-460-8361	122	21
7X677	8682857	2520-01-461-5648	122	29
7X677	8682858	5340-01-477-7052	122	11
7X677	8683075		114	17
61928	8683088	2520-01-444-2711	120	5

CROSS REFERENCE INDEXES

PART NUMBER INDEX

CAGE	PART NUMBER	STOCK NUMBER	FIGURE NO	ITEM NO
7X677	8683188		119	28
7X677	8683771	3020-01-480-7311	107	17
7X677	8684205		120	8
7X677	8684213		119	31
7X677	8684214		119	30
7X677	8684215	5340-01-460-8363	119	29
7X677	8684217	5340-01-460-8362	119	23
7X677	8684218		119	1
7X677	8684220	2520-01-409-2509	120	1
7X677	8684221	2520-01-398-4589	105	15
7X677	8685472		117	4
7X677	8685473		117	1
7X677	8685474		117	2
7X677	8685921	2520-01-481-8344	KITS	98
7X677	8686122		115	24
7X677	8686124	5306-01-461-3555	105	13
19207	8689220	5940-00-503-6184	41	17
19207	8689221	5940-01-170-4956	41	10
		5940-01-170-4956	41	19
		5940-01-170-4956	313	15
		5940-01-170-4956	474	11
19207	8701325	5310-00-655-9860	80	8
		5310-00-655-9860	85	8
		5310-00-655-9860	86	4
76700	870889A	4330-01-506-2918	176A	12
19207	8712289	5310-00-044-3340	40	7
19207	8712289-4	5310-00-840-6222	169	14
19204	8712289-5	5310-00-044-3342	127	13
		5310-00-044-3342	180	17
19207	8724258	5935-00-686-2599	85	16
		5935-00-686-2599	86	9
11862	8727200		116	13
19207	8741435	5310-00-241-6921	62	20
19207	8741437	5305-00-832-5743	62	15
19207	8741442	5325-00-088-6147	62	23
19207	8741446	5325-00-832-5650	62	16
19207	8741447	6220-00-998-6142	62	19
19207	8741461	6220-00-443-0589	62	21
19207	8741491	6240-00-966-3831	62	17
19207	8741492	5935-00-807-4109	62	22
		5935-00-807-4109	366	31
		5935-00-807-4109	386	9
		5935-00-807-4109	469	10
		5935-00-807-4109	483	1
19207	8754124	5325-01-144-4871	68	8
19207	8754125	5930-01-153-8215	68	10
56232	876105-012	5310-00-063-7360	345	42
		5310-00-063-7360	348	39
27647	8762	5310-01-138-2605	314	23

CROSS REFERENCE INDEXES

PART NUMBER INDEX

CAGE	PART NUMBER	STOCK NUMBER	FIGURE NO	ITEM NO
27647	8763	5305-01-210-6248	314	21
13445	88587	5310-01-185-7208	69	8
		5310-01-185-7208	70	3
72582	8924145	4730-00-803-6266	334	11
41885	89305	2530-01-160-9569	167	1
39428	8930T31	1640-00-929-0041	BULK	50
41885	89324	5305-01-205-6048	167	9
76760	89331A	5325-01-358-7960	129	20
19712	8MA-3010AS	2920-01-244-4993	43	1
11083	8S4680	5330-00-493-3876	KITS	84
19728	8X-1681		45	22
19728	8X-179		45	59
19728	8X-3439		45	81
19728	8X-349		45	34
19728	8X-4678		45	19
19728	8X-830		45	61
19220	9-300-U-L	2540-01-197-4900	281	22
19220	9-300-U-R	2540-01-196-5317	280	22
		2540-01-196-5317	281	22
68505	90-2187	2920-01-168-4128	KITS	100
68505	90-2188	5310-01-027-9392	KITS	101
68505	90-2206	2920-00-302-6342	KITS	102
68505	90-2225	2920-01-068-7182	KITS	103
68505	90-2531	2920-01-168-4129	KITS	104
68505	90-2532	2920-01-168-4130	KITS	105
68505	90-2836	5305-01-188-9707	KITS	106
68505	90-2837	2920-01-192-2956	KITS	107
68505	90-2838	2920-01-192-4473	KITS	108
19728	90-2840	3120-01-191-4637	KITS	109
68505	90-2841	2920-01-191-6534	KITS	110
68505	90-816	2920-01-192-2959	KITS	99
27182	90-SN	5340-01-271-6361	215	5
98624	9002-00181-48	5331-01-194-8966	34	10
51377	9002-00741-58	5331-01-195-1500	34	9
19207	900529	3110-00-108-9247	458	35
78500	902-04-48-244	2520-01-214-2565	169	17
81834	90221	6220-00-001-1514	64	8
41885	90297	5306-01-336-7175	167	15
09094	903C4-16	5315-00-973-8637	245	11
41885	90619	4730-01-346-1063	167	24
73342	907425	3110-00-155-6152	128	14
13940	91-BS-78403		224	13
			324	2
13940	91-BS-78403-1E	5325-00-281-8643	316	5
		5325-00-281-8643	319	2
		5325-00-281-8643	322	2
63829	9103-9800	2520-01-289-3617	KITS	111
39428	91248A721	5305-00-719-5240	191	14
95019	913359-1528	2520-01-171-8258	137	4

CROSS REFERENCE INDEXES

PART NUMBER INDEX

CAGE	PART NUMBER	STOCK NUMBER	FIGURE NO	ITEM NO
76760	91386	5315-00-576-0265	132	30
63829	9140-9810	2520-01-290-3921	KITS	112
95019	914201-2626	2520-01-200-3096	136	16
95019	914202-1524	2520-01-200-3097	136	6
41885	91427EBKBC	2530-01-417-4908	167	2
		2530-01-417-4908	167	14
41885	91428EBKBC	2530-01-417-8450	167	8
		2530-01-417-8450	167	19
K1076	9145-105-00B	5310-01-127-2456	100	7
		5310-01-127-2456	173	1
95019	915051-1624	2520-01-346-1374	137	4
73165	91598	5330-01-425-5069	4	29
41885	91610	5331-01-417-1043	167	16
63829	9162-0121	5315-01-287-6520	491	4
68505	92-2923	5310-01-214-4955	45	50
0VDA9	922-621-02	6220-01-269-5263	65	3
0VDA9	922-720-11	6220-01-266-1651	65	24
0VDA9	922-721-00	6230-01-269-8054	65	22
		6230-01-269-8054	289	28
0VDA9	922-925-10	6250-01-339-6271	65	11
0VDA9	922-929-00	6220-01-338-2059	65	9
7X677	930678	3110-01-411-5784	115	15
7X677	930679	2520-01-149-1221	105	2
		2520-01-149-1221	106	2
34623	934245	4730-00-954-1251	18	5
24617	9356973	5962-01-476-7772	50	4
63829	9383-6010	2520-01-289-9663	491	1
7X677	9411030	4730-00-050-4205	170	4
27387	941180	2530-01-186-3740	195	10
24617	9411807	5310-01-461-8043	227	48
24617	9411893	5310-00-251-4503	234	17
		5310-00-251-4503	246	9
		5310-00-251-4503	246	14
		5310-00-251-4503	247	13
		5310-00-251-4503	247	24
		5310-00-251-4503	248	9
		5310-00-251-4503	249	6
		5310-00-251-4503	249	21
		5310-00-251-4503	249	33
		5310-00-251-4503	251	15
		5310-00-251-4503	251	25
		5310-00-251-4503	251	39
		5310-00-251-4503	252	17
		5310-00-251-4503	252	39
		5310-00-251-4503	253	5
		5310-00-251-4503	253	12
		5310-00-251-4503	253	15
		5310-00-251-4503	253	32
		5310-00-251-4503	253	39

CROSS REFERENCE INDEXES

PART NUMBER INDEX

CAGE	PART NUMBER	STOCK NUMBER	FIGURE NO	ITEM NO
		5310-00-251-4503	254	4
		5310-00-251-4503	254	12
		5310-00-251-4503	255	4
		5310-00-251-4503	255	12
		5310-00-251-4503	255	14
		5310-00-251-4503	255	25
		5310-00-251-4503	255	29
		5310-00-251-4503	260	16
		5310-00-251-4503	416	11
		5310-00-251-4503	446	9
		5310-00-251-4503	447	5
		5310-00-251-4503	448	8
		5310-00-251-4503	449	2
		5310-00-251-4503	450	1
		5310-00-251-4503	486	3
34623	9412281	5315-01-173-3397	277	19
		5315-01-173-3397	277	46
24617	9413266	5310-01-361-1152	438	9
7X677	9413349	5325-01-408-7973	120	2
24617	9413509	5310-00-768-0318	69	1
7X677	9413523	5340-01-479-2517	117	17
24617	9413583	5310-01-381-5328	231	24
		5310-01-381-5328	454	4
7X677	9414224	5305-01-211-1439	47	3
24617	9414241	5305-01-361-5353	225	52
		5305-01-361-5353	306	8
		5305-01-361-5353	346	5
		5305-01-361-5353	410	23
		5305-01-361-5353	445	4
		5305-01-361-5353	451	3
24617	9414295	5305-01-433-9248	366	6
24617	9414313	5305-01-380-9163	333	14
86403	9414722	5305-01-213-5024	332	17
24617	9414726	5305-01-447-9227	332	31
24617	9415477	5305-00-489-0743	77	18
		5305-00-489-0743	88	14
		5305-00-489-0743	88	28
		5305-00-489-0743	443	5
		5305-00-489-0743	444	6
		5305-00-489-0743	457	16
7X677	9415560	5306-01-186-5369	188	27
		5306-01-186-5369	442	18
24617	9415778	5305-01-394-3543	370	16
54132	9415779	5305-01-120-4363	388	8
7X677	9415786	5305-01-187-9555	73	7
7X677	9415857	5305-01-211-1450	13	4
		5305-01-211-1450	14	4
		5305-01-211-1450	16	24
24617	9416128	5310-00-402-2778	51	12

CROSS REFERENCE INDEXES

PART NUMBER INDEX

CAGE	PART NUMBER	STOCK NUMBER	FIGURE NO	ITEM NO
24617	9416402	5305-01-456-6358	314	40
24617	9416918	5310-01-012-8962	24	9
		5310-01-012-8962	393	4
		5310-01-012-8962	395	21
24617	9417028	5310-01-457-3171	35	30
		5310-01-457-3171	36	9
		5310-01-457-3171	38	9
		5310-01-457-3171	472	20
		5310-01-457-3171	475	18
24617	9417373	5310-01-361-1163	439	7
		5310-01-361-1163	462	8
		5310-01-361-1163	465	1
		5310-01-361-1163	485	25
1W358	9417497		227	44
24617	9417497		227	44
24617	9417714	5310-01-217-5205	85	5
		5310-01-217-5205	88	3
		5310-01-217-5205	203	30
		5310-01-217-5205	272	5
		5310-01-217-5205	486	2
7X677	9417793	5310-01-211-3811	24	19
		5310-01-211-3811	25	6
		5310-01-211-3811	175	5
24617	9417901	4730-00-050-4203	170	5
24617	9418304	5310-01-119-3675	7	2
24617	9418346	5305-00-179-8946	89	13
		5305-00-179-8946	91	10
		5305-00-179-8946	93	21
		5305-00-179-8946	94	8
		5305-00-179-8946	95	36
24617	9418753	5310-01-465-4525	33	7
		5310-01-465-4525	512	4
16764	9418913	5305-00-841-2044	72	14
24617	9418924	5310-01-132-8275	12	12
34623	9419011	5306-01-266-8274	202	28
24617	9419032	5306-01-158-6224	7	1
7X677	9419079	5305-01-211-7478	170	15
		5305-01-211-7478	195	4
7X677	9419143	5310-01-148-0240	68	4
24617	9419265	5310-01-170-8765	411	18
7X677	9419293	5306-01-185-7052	137	15
		5306-01-185-7052	239	11
7X677	9419343	5306-01-197-3274	150	27
24617	9419456	5310-01-318-5237	389	4
24617	9419471	5310-01-432-6727	153	3
		5310-01-432-6727	155	14
		5310-01-432-6727	198	10
		5310-01-432-6727	208	4
		5310-01-432-6727	227	31

CROSS REFERENCE INDEXES

PART NUMBER INDEX

CAGE	PART NUMBER	STOCK NUMBER	FIGURE NO	ITEM NO
		5310-01-432-6727	261	11
		5310-01-432-6727	321	15
		5310-01-432-6727	325	17
		5310-01-432-6727	326	12
		5310-01-432-6727	332	2
		5310-01-432-6727	377	8
		5310-01-432-6727	486	4
		5310-01-432-6727	487	10
24617	9419476	5310-00-984-3807	199	9
		5310-00-984-3807	324	9
		5310-00-984-3807	325	25
		5310-00-984-3807	325	26
24617	9419482	5310-01-409-0897	462	14
24617	9419836	5305-01-215-3985	43	32
24617	9420022	5310-00-809-4085	35	23
		5310-00-809-4085	152	15
		5310-00-809-4085	456	16
		5310-00-809-4085	472	11
24617	9421073	5305-01-162-8512	12	2
24617	9421077	5310-01-102-7356	154	1
7X677	9421294	5305-01-185-8674	240	4
		5305-01-185-8674	240	18
		5305-01-185-8674	240	22
		5305-01-185-8674	269	6
		5305-01-185-8674	442	5
7X677	9421394	5310-01-199-2293	227	32
		5310-01-199-2293	377	2
24617	9421705	5305-01-381-2296	231	11
7X677	9422042	5306-01-207-7487	374	7
24617	9422277	5310-01-126-9404	329	12
24617	9422295	5310-01-119-3668	231	7
		5310-01-119-3668	439	5
24617	9422299	5310-01-150-4003	127	9
		5310-01-150-4003	136	3
		5310-01-150-4003	144	14
		5310-01-150-4003	152	14
		5310-01-150-4003	271	12
		5310-01-150-4003	271	27
		5310-01-150-4003	398	8
		5310-01-150-4003	464	8
7X677	9422302	5310-01-184-5784	194	2
11862	9422303	5310-00-044-3342	166	5
24617	9422305	5310-01-130-4274	196	7
7X677	9422306	5310-00-198-6691	437	5
7X677	9422771	5310-01-211-0691	284	17
		5310-01-211-0691	439	10
7X677	9423534	5310-01-213-4192	205	15
		5310-01-213-4192	250	15
24617	9423557	5306-01-360-1123	283	21

CROSS REFERENCE INDEXES

PART NUMBER INDEX

CAGE	PART NUMBER	STOCK NUMBER	FIGURE NO	ITEM NO
		5306-01-360-1123	438	17
7X677	9423869	5310-01-186-1245	197	34
24617	9423995	5305-00-719-5235	437	12
7X677	9424258	5310-01-199-3440	209	4
		5310-01-199-3440	225	40
7X677	9424760	5306-01-255-2661	193	7
7X677	9425078	5305-01-210-6251	15	34
3M915	9425170	5305-01-461-4396	332	38
76700	94252A	2530-01-488-6147	176A	5
24617	9425339	5305-01-315-7066	239	2
		5305-01-315-7066	402	4
24617	9426241	5305-01-206-7219	13	8
		5305-01-206-7219	14	14
		5305-01-206-7219	17	15
		5305-01-206-7219	88	35
7X677	9427162	5306-01-186-7128	181	14
24617	9427321	5305-01-104-4846	187	8
		5305-01-104-4846	441	7
7X677	9427812	5305-01-255-0094	185	2
24617	9428039	5305-01-111-2774	187	2
		5305-01-111-2774	441	2
7X677	9428308	5310-01-212-2213	170	19
		5310-01-212-2213	195	8
7X677	9428747	5305-01-204-4190	275	17
		5305-01-204-4190	276	16
7X677	9428795	5305-01-197-9417	463	14
7X677	9428839	5310-01-408-9593	127	6
7X677	9428851	5310-01-250-7835	26	10
7X677	9429048	5310-01-209-7702	225	39
		5310-01-209-7702	231	21
24617	9430516	5305-01-411-4455	453	16
24617	9430677	5306-01-130-0457	463	8
7X677	9430724	5305-01-198-3440	463	7
7X677	9430761	5305-01-213-4149	171	5
7X677	9434068	3110-00-198-0492	128	27
24617	9436356		487	6
24617	9436711		487	4
7X677	9437847	5306-01-156-3730	445	13
7X677	9437889	5340-01-195-1575	69	3
24617	9438218		13	24
			14	9
7X677	9438257	4720-01-155-7784	BULK	26
7X677	9438315	4720-01-148-2768	BULK	14
7X677	9438373	4720-01-159-5796	BULK	25
7X677	9438381	4720-01-156-0550	BULK	13
7X677	9439046	4720-01-156-0549	BULK	12
11862	9439363		11	3
7X677	9440949	4720-01-199-5717	BULK	7
72582	9442899	5310-01-135-4730	131	1

CROSS REFERENCE INDEXES

PART NUMBER INDEX

CAGE	PART NUMBER	STOCK NUMBER	FIGURE NO	ITEM NO
24617	9442900	5310-01-149-4407	26	13
24617	9442938	5310-01-315-3403	234	10
		5310-01-315-3403	235	13
		5310-01-315-3403	239	7
		5310-01-315-3403	402	10
92867	95001418	5340-01-213-5600	153	9
92867	95001419	5340-01-211-7562	153	23
35510	95467	5970-01-269-8384	39	14
35510	95469	5306-01-272-4798	39	24
35510	95483	5330-01-272-9071	39	17
35510	95484	5307-01-272-7539	39	54
35510	95498	5330-01-270-3668	39	26
35510	95504	5305-01-282-2667	39	31
35510	95510	3130-01-271-6464	39	3
35510	95513	5330-01-272-5474	39	2
24975	95515	5977-01-270-1468	39	72
35510	95516	5365-01-272-2663	39	73
35510	95552	5340-01-272-5516	39	5
35510	95605	5310-01-270-8377	39	13
35510	95965	5970-01-260-9132	39	75
20722	9609A838-002	5340- 0-149-6854	474	15
40152	961458	6240-00-765-8443	47	2
35510	96154		39	38
35510	96156	6150-01-269-1858	39	64
35510	96160	6150-01-269-1856	39	40
35510	96162	6150-01-269-1863	39	51
35510	96171	3120-01-271-6432	39	59
35510	96172	5330-01-270-8316	39	67
35510	96180	5365-01-272-4877	39	50
35510	96187	5970-01-270-1467	39	60
35510	96188	5920-01-266-3908	39	62
35510	96247		39	39
35510	96259	5970-01-270-1465	39	27
70485	963	5325-01-195-8002	71	6
80252	9630	2590-00-683-0598	68	5
35510	96377	3040-01-271-3823	39	41
35510	96520	2920-01-310-9978	39	16
76760	96711-B		130	35
35510	96745	5365-01-272-7502	39	15
35510	96756	6130-01-309-6458	39	53
35510	96764	3110-01-271-6355	39	20
35510	96768	5330-01-272-8337	39	71
35510	96769		39	70
35510	96846		39	19
20722	96909A383-002	5340-01-449-6854	41	8
73002	9781210307	4720-01-505-4702	176A	23
27647	980074 5553	5305-01-210-4967	314	25
39428	98019A510	5310-00-656-0114	476	13
0GZB7	983-60-50085-A	3940-01-475-4983	469	9

CROSS REFERENCE INDEXES

PART NUMBER INDEX

CAGE	PART NUMBER	STOCK NUMBER	FIGURE NO	ITEM NO
0GZB7	983-60-50089	5340-01-475-3650	469	8
0GZB7	983-74-1001	6150-01-475-8835	469	6
0GZB7	983-75-50050CV	2590-01-474-3326	471	2
0GZB7	983-88-00C36	4720-01-475-3757	470	1
0GZB7	983-88-00C47	4720-01-475-4641	470	2
0GZB7	983-90-50201	4710-01-475-3753	469	7
0GZB7	983-92-52000	5365-01-474-1057	470	16
		5365-01-474-1057	471	7
35510	99479	5977-01-143-6996	39	68
35510	99514	5330-01-145-5376	39	69
41024	99890451	2510-01-189-3459	320	5
		2510-01-189-3459	324	10

By Order of the Secretary of the Army:

ERIC K. SHINSEKI
General, United States Army
Chief of Staff

Official:

JOEL B. HUDSON
Administrative Assistant to the
Secretary of the Army
05696

By Order of the Secretary of the Air Force:

RONALD R. FOGLEMAN
General, United States Air Force
Chief of Staff

Official:

HENRY VICCELLIO, JR.
General, United States Air Force
Commander, Air Force Materiel Command

Distribution:

To be distributed in accordance with the initial distribution number (IDN) 381008, requirements for TM 9-2320-280-24P-2.

RECOMMENDED CHANGES TO PUBLICATIONS AND BLANK FORMS For use of this form, see AR 25-30; the proponent agency is ODISC4.	Use Part II (reverse) for Repair Parts and Special Tools Lists (RPSTL) and Supply Catalogs/Supply Manuals (SC/SM).	DATE:

TO: *(Forward to proponent of publication or form) (include ZIP code)* AMSTA-LC-CI Tech Pubs, TACOM-RI 1 Rock Island Arsenal Rock Island, IL 61299-7630	FROM: *(Activity and location) (include ZIP code)*

PART I - ALL PUBLICATIONS (EXCEPT RPSTL AND SC/SM) AND BLANK FORMS

PUBLICATION/FORM NUMBER	DATE	TITLE

ITEM NO.	PAGE NO.	PARA-GRAPH	LINE NO.*	FIGURE NO.	TABLE NO.	RECOMMENDED CHANGES AND REASON *(Provide exact wording of recommended changes, if possible).*

SAMPLE

**Reference to line numbers within the paragraph or subparagraph.*

TYPED NAME, GRADE, OR TITLE	TELEPHONE EXCHANGE/AUTOVON, PLUS EXTENSION	SIGNATURE

TO: *(Forward direct to addressee listed in publication)*	FROM: *(Activity and location) (include ZIP code)*	DATE:
AMSTA-LC-CI Tech Pubs, TACOM-RI 1 Rock Island Arsenal Rock Island, IL 61299-7630	Co. B, 1st BN, 2nd Brigade Ft. Hood, TX 76445	14 Jul 2003

PART II - REPAIR PARTS AND SPECIAL TOOLS LISTS AND SUPPLY CATALOGS/SUPPLY MANUALS

PUBLICATION/FORM NUMBER	DATE	TITLE
TM 9-2320-280-24P-2	30 MARCH 2001	TECHNICAL MANUAL, UNIT, DIRECT SUPPORT AND GENERAL SUPPORT MAINTENANCE REPAIR PARTS AND SPECIAL TOOLS LIST

PAGE NO.	COLM NO.	LINE NO.	NATIONAL STOCK NUMBER	REFERENCE NO.	FIGURE NO.	ITEM NO.	TOTAL NO. OF MAJOR ITEMS SUPPORTED	RECOMMENDED ACTION
420-1	5	6,7	N/A		420	6,7	1	Part numbers for items 6 and 7 are incorrectly listed; item No. 6 should be P/N 1834 and item No. 7 should be P/N 1833.

SAMPLE

PART III - REMARKS *(Any general remarks or recommendations, or suggestions for improvement of publications and blank forms. Additional blank sheets may be used if more space is needed.)*

TYPED NAME, GRADE, OR TITLE	TELEPHONE EXCHANGE/AUTOVON, PLUS EXTENSION	SIGNATURE
Pat Smith, ILT	AV272-4162	Pat Smith, ILT

USAPPC V3.00

RECOMMENDED CHANGES TO PUBLICATIONS AND BLANK FORMS For use of this form, see AR 25-30; the proponent agency is ODISC4.	Use Part II (reverse) for Repair Parts and Special Tools Lists (RPSTL) and Supply Catalogs/Supply Manuals (SC/SM).	DATE:

TO: *(Forward to proponent of publication or form) (include ZIP code)* AMSTA-LC-CI Tech Pubs, TACOM-RI 1 Rock Island Arsenal Rock Island, IL 61299-7630	FROM: *(Activity and location) (include ZIP code)*

PART I - ALL PUBLICATIONS (EXCEPT RPSTL AND SC/SM) AND BLANK FORMS

PUBLICATION/FORM NUMBER	DATE	TITLE

ITEM NO.	PAGE NO.	PARA-GRAPH	LINE NO.*	FIGURE NO.	TABLE NO.	RECOMMENDED CHANGES AND REASON *(Provide exact wording of recommended changes, if possible).*

**Reference to line numbers within the paragraph or subparagraph.*

TYPED NAME, GRADE, OR TITLE	TELEPHONE EXCHANGE/AUTOVON, PLUS EXTENSION	SIGNATURE

TO: *(Forward direct to addressee listed in publication)* AMSTA-LC-CI Tech Pubs, TACOM-RI 1 Rock Island Arsenal Rock Island, IL 61299-7630	FROM: *(Activity and location) (include ZIP code)*	DATE:

PART II - REPAIR PARTS AND SPECIAL TOOLS LISTS AND SUPPLY CATALOGS/SUPPLY MANUALS

PUBLICATION/FORM NUMBER	DATE	TITLE
TM 9-2320-280-24P-2	30 MARCH 2001	TECHNICAL MANUAL, UNIT, DIRECT SUPPORT AND GENERAL SUPPORT MAINTENANCE REPAIR PARTS AND SPECIAL TOOLS LIST

PAGE NO.	COLM NO.	LINE NO.	NATIONAL STOCK NUMBER	REFERENCE NO.	FIGURE NO.	ITEM NO.	TOTAL NO. OF MAJOR ITEMS SUPPORTED	RECOMMENDED ACTION

PART III - REMARKS *(Any general remarks or recommendations, or suggestions for improvement of publications and blank forms. Additional blank sheets may be used if more space is needed.)*

TYPED NAME, GRADE, OR TITLE	TELEPHONE EXCHANGE/AUTOVON, PLUS EXTENSION	SIGNATURE

USAPPC V3.00

RECOMMENDED CHANGES TO PUBLICATIONS AND BLANK FORMS For use of this form, see AR 25-30; the proponent agency is ODISC4.	Use Part II (reverse) for Repair Parts and Special Tools Lists (RPSTL) and Supply Catalogs/Supply Manuals (SC/SM).	DATE:

TO: *(Forward to proponent of publication or form) (include ZIP code)* AMSTA-LC-CI Tech Pubs, TACOM-RI 1 Rock Island Arsenal Rock Island, IL 61299-7630	FROM: *(Activity and location) (include ZIP code)*

PART I - ALL PUBLICATIONS (EXCEPT RPSTL AND SC/SM) AND BLANK FORMS

PUBLICATION/FORM NUMBER	DATE	TITLE

ITEM NO.	PAGE NO.	PARA-GRAPH	LINE NO.*	FIGURE NO.	TABLE NO.	RECOMMENDED CHANGES AND REASON *(Provide exact wording of recommended changes, if possible).*

**Reference to line numbers within the paragraph or subparagraph.*

TYPED NAME, GRADE, OR TITLE	TELEPHONE EXCHANGE/AUTOVON, PLUS EXTENSION	SIGNATURE

TO: *(Forward direct to addressee listed in publication)* AMSTA-LC-CI Tech Pubs, TACOM-RI 1 Rock Island Arsenal Rock Island, IL 61299-7630	FROM: *(Activity and location) (include ZIP code)*	DATE:

PART II - REPAIR PARTS AND SPECIAL TOOLS LISTS AND SUPPLY CATALOGS/SUPPLY MANUALS

PUBLICATION/FORM NUMBER	DATE	TITLE
TM 9-2320-280-24P-2	30 MARCH 2001	TECHNICAL MANUAL, UNIT, DIRECT SUPPORT AND GENERAL SUPPORT MAINTENANCE REPAIR PARTS AND SPECIAL TOOLS LIST

PAGE NO.	COLM NO.	LINE NO.	NATIONAL STOCK NUMBER	REFERENCE NO.	FIGURE NO.	ITEM NO.	TOTAL NO. OF MAJOR ITEMS SUPPORTED	RECOMMENDED ACTION

PART III - REMARKS *(Any general remarks or recommendations, or suggestions for improvement of publications and blank forms. Additional blank sheets may be used if more space is needed.)*

TYPED NAME, GRADE, OR TITLE	TELEPHONE EXCHANGE/AUTOVON, PLUS EXTENSION	SIGNATURE

USAPPC V3.00

RECOMMENDED CHANGES TO PUBLICATIONS AND BLANK FORMS For use of this form, see AR 25-30; the proponent agency is ODISC4.	Use Part II (reverse) for Repair Parts and Special Tools Lists (RPSTL) and Supply Catalogs/Supply Manuals (SC/SM).	DATE:

TO: *(Forward to proponent of publication or form) (include ZIP code)* AMSTA-LC-CI Tech Pubs, TACOM-RI 1 Rock Island Arsenal Rock Island, IL 61299-7630	FROM: *(Activity and location) (include ZIP code)*

PART I - ALL PUBLICATIONS (EXCEPT RPSTL AND SC/SM) AND BLANK FORMS

PUBLICATION/FORM NUMBER	DATE	TITLE

ITEM NO.	PAGE NO.	PARA-GRAPH	LINE NO.*	FIGURE NO.	TABLE NO.	RECOMMENDED CHANGES AND REASON *(Provide exact wording of recommended changes, if possible).*

**Reference to line numbers within the paragraph or subparagraph.*

TYPED NAME, GRADE, OR TITLE	TELEPHONE EXCHANGE/AUTOVON, PLUS EXTENSION	SIGNATURE

TO: *(Forward direct to addressee listed in publication)* AMSTA-LC-CI Tech Pubs, TACOM-RI 1 Rock Island Arsenal Rock Island, IL 61299-7630	FROM: *(Activity and location) (include ZIP code)*	DATE:

PART II - REPAIR PARTS AND SPECIAL TOOLS LISTS AND SUPPLY CATALOGS/SUPPLY MANUALS

PUBLICATION/FORM NUMBER	DATE	TITLE
TM 9-2320-280-24P-2	30 MARCH 2001	TECHNICAL MANUAL, UNIT, DIRECT SUPPORT AND GENERAL SUPPORT MAINTENANCE REPAIR PARTS AND SPECIAL TOOLS LIST

PAGE NO.	COLM NO.	LINE NO.	NATIONAL STOCK NUMBER	REFERENCE NO.	FIGURE NO.	ITEM NO.	TOTAL NO. OF MAJOR ITEMS SUPPORTED	RECOMMENDED ACTION

PART III - REMARKS *(Any general remarks or recommendations, or suggestions for improvement of publications and blank forms. Additional blank sheets may be used if more space is needed.)*

TYPED NAME, GRADE, OR TITLE	TELEPHONE EXCHANGE/AUTOVON, PLUS EXTENSION	SIGNATURE

USAPPC V3.00

PIN: 074666-001